April 11, 2014

Augusta Planning Board Material for:

Major Development

Augusta Kingdom Hall of Jehovah's Witnesses

Prepared for:

Augusta Congregation of Jehovah's Witnesses

City of Augusta
Development Review Application

Bureau of Planning, Department of Development Services

Address of Proposed development: Corner of Cross Hill Road and N Belfast Ave

Zone(s): RRES

Project Name: Augusta Kingdom Hall of Jehovah's Witnesses

Existing Building (sq. ft.): none	**Proposed Building (sq. ft.):** 5,132
Existing Impervious (sq. ft.): none	**Proposed Impervious (sq. ft.):** 42,886

Proposed Total Disturbed Area of the Site: 2.36 Acres
Proposed disturbance of greater than one acre requires a Chapter 500, Stormwater Management Permit from the Maine Department of Environmental Protection (DEP).

Owner's Name/Address: Augusta Congregation of Jehovah's Witnesses c/o Gary Grard 1544 Cross Hill Rd Augusta, ME **Phone #:** 207-923-3771 **Cell #:** 207-314-3773 **e-mail:** glgrard@roadrunner.com	**Applicant's Name/Address:** Same as Owner **Phone #:** **Cell #:** **e-mail:**	**Consultant's Name/Address:** Maine Regional Building Committee, Design/Engineering Dept. Eero Hedefine, P.E. PO Box 668 Ellsworth, ME **Phone #:** 207-664-0930 **Cell #:** 207-479-6350 **e-mail:** eero@hedeng.co
Tax Map #: 7 **Lot #:** 85	**Lot Size (acres):** 21.17 **Frontage (Feet):** **Cross Hill:** 158' +/- **N Belfast Ave:** 452'+/-	**Form for Evidence of Standing** (deed, purchase and sale agreement, other): See attached deed

For Staff Use

Fee Calculation: Major Development max fee is $4,000; Minor Development max fee is $1,000

Major Development: $2,000 + (number of sq ft over 25,000 x $0.15) =

Minor Development: $250 + (number of sq ft over 5,000 x $0.15) =

All Development: Number of Abutters x (1oz First Class postage fee + $0.15) =

Total Fee:

Signatures

Applicant: Gary Grard **Date:** 4/11/14

Owner: Gary Grard **Date:** 4/11/14

Agent: Eero Hedefine **Date:** 4/11/14

Checklist. The checklist below must be completed by the applicant. The required material or a written waiver request must be provided.

Information Required on Plan(s) See Augusta Land Use Ordinance for greater detail	**Included**	**Waiver Requested**
a. Name of Site Plan (Sec 4.5.2.1 of the Land Use Ordinance)	x	
b. Owner(s) name and address (4.5.2.2)	x	
c. Deed reference to subject parcel (4.5.2.3)	x	
d. Engineer's name, address, signature and seal (4.5.2.4)	x	
e. Surveyor's name, address, signature and seal (4.5.2.5)	x	
f. Scale, both in graphic and written form (4.5.2.6)	x	
g. Date and Revision box (4.5.2.7)	x	
h. Zoning designation(s) (4.5.2.8)	x	
i. North Arrow (true and magnetic, dated or grid) (4.5.2.9)	x	
j. Ownership, location and present use of abutting land (4.5.2.11)	X	
k. Location map (4.5.2.12)	X	
l. Streets, existing & proposed, with curve data (4.5.2.13 & 4.6.2.5)	n/a	
m. Drainage and erosion control (4.5.2.14)	X	
n. Utilities, existing and proposed (4.5.2.15)	X	
o. Topography, 2 foot contours (4.5.2.16)	X	
p. Parcel boundaries and dimensions (4.5.2.17)	x	
q. Proposed Use of the property (4.5.2.18)	X	
r. Proposed public or common areas (4.5.2.19)	n/a	
s. Boundary Survey and associated information (4.5.2.20)	X	
t. Traffic controls, off-street parking and facilities (4.5.2.21)	X	
u. Proposed fire protection plans or needs (4.5.2.22)	n/a	
v. Landscaping and buffering (4.5.2.23)	X	
w. Outdoor lighting plan (4.5.2.24)	X	
x. Freshwater wetlands (4.4.1.14)	X	
y. River, stream or brook (4.4.1.15)	X	
Information Required in Written Project Narrative See Augusta Land Use Ordinance for greater detail	**Included**	**Waiver Requested**
a. Pollution – Undue water or air pollution (4.4.1.1)	X	
b. Water – Sufficient potable water (4.4.1.2)	X	
c. Municipal Water – is there adequate supply (4.4.1.3)	X	
d. Soil Erosion – unreasonable soil erosion (4.4.1.4)	X	
e. Road congestion and safety (4.4.1.5 & 4.5.2.21)	X	
f. Sewage waste disposal – adequate provisions (4.4.1.6)	X	
g. Solid waste – adequate provisions (4.4.1.7)	X	
h. Aesthetic, cultural, and natural values (4.4.1.8)	X	
i. Conformity with city ordinances and plans (4.4.1.9)	X	
j. Financial and technical ability (4.4.1.10)	X	
k. Surface water, shoreland, outstanding rivers (4.4.1.11)	X	
l. Ground water – negative impact (4.4.1.12)	X	
m. Flood areas (4.4.1.13)	X	
n. Freshwater wetlands – description of impact (4.4.1.14)	X	
o. Stormwater – management plans (4.4.1.16)	X	
p. Access to direct sunlight (4.4.1.17)	X	
q. State Permits – description of requirements (4.4.1.18)	X	
r. Outdoor lighting – description of lighting plans (4.4.1.20)	X	

Additional Information Required in Written Narrative See Augusta Land Use Ordinance for greater detail **Where the items below duplicate the items above, identical responses are permitted and encouraged.**	**Included**	**Waiver Requested**
s. Neighborhood Compatibility – description per ordinance (6.3.4.1)	X	
t. Compliance with Plans and Policies (6.3.4.2)	X	
u. Traffic Pattern, Flow, and Volume analysis (6.3.4.3)	X	
v. Public facilities – Utilities including stormwater (6.3.4.4)	X	
w. Resource protection and the environment (6.3.4.5)	X	
x. Performance Standards (6.3.4.6)	X	
y. Financial and Technical Ability (6.3.4.7)	X	

Application Materials

The application materials that are required for a complete application are listed below:

Paper Copies	**Included**	**Waiver Requested**
11 copies of the application form and narrative	X	
11 copies of the deed, Purchase & Sale agreement, or other document to show standing	X	
3 copies of any stormwater report	X	
2 copies of any traffic report	X	
7 reduced-sized copies of the complete plan set on 11” x 17” size paper	X	
4 full-sized copies of the complete plan set on ANSI D or E size paper	X	
11 copies of a letter authorizing the agent to represent the applicant	X	
Payment in full of application fee (Note: an abutter notification fee will be assessed after the application is determined to be complete. The fee is $0.15 plus the cost of first class postage for each abutter that will be notified as required by the ordinance.)	X	
Electronic Copy		
1 CD that includes each of the application documents in Adobe PDF format	x	

For Official Use:

[] $_____ **Application** Fee Paid. Received By (Initials):_____Date:_____

[] $_____ **Abutter** Notification Fee Paid. Received By (Initials):_____Date:_____

McCULLUM & McCULLUM
ATTORNEYS AT LAW
8 Crosby Street
P. O. Box 2188
Augusta, Maine 04338-2188

David M. McCullum
Email: acdtitle@gwi.net

Telephone: (207) 622-0410
Facsimile: (207) 623-2081

September 20, 2012

Augusta Congregation of Jehovah's Witnesses
Attn: Dennis Snelling
132 Whitehouse Road
Vassalboro, Maine 04989

Re: Deed Work
36 Eastern Avenue, Augusta, Maine
Our File #3705-12

Dear Dennis:

Enclosed please the following documents regarding the above referenced real estate transaction:

1. Warranty Deed recorded at the Kennebec County Registry of Deeds on September 19, 2012, in Book 11168, Page 302

Please keep this document in a place of safe-keeping.

It was a pleasure to assist you in this matter. Please do not hesitate to call our office with any questions.

Sincerely,

Bonnie

Bonnie J. Cloutier
Legal Assistant

BJC/me
Enclosure

Doc # 2012009341
Book 11019 Page 0227

Received Kennebec SS.
04/26/2012 12:06PM
Pages 3 Attest:
BEVERLY BUSTIN-HATHEWAY
REGISTER OF DEEDS

TRANSFER TAX PAID

WARRANTY DEED

KNOW ALL MEN BY THESE PRESENTS, that we, **JASON F. SIROIS and SUSAN SIROIS**, of Sidney, Maine, for consideration paid, grant(s) to **AUGUSTA CONGREGATION OF JEHOVAH'S WITNESSES,** of Non-Profit Maine Corporation, with a place of existence in Vassalboro, Maine, with **WARRANTY COVENANTS**, a certain lot or parcel of land, together with any buildings thereon, situated in the City of Augusta, County of Kennebec, and State of Maine, bounded and described as follows:

See Schedule A attached hereto and incorporated herein by reference.

WITNESS our hands and seals this 20th day of April, 2012.

Signed, Sealed and Delivered
in the presence of:

Witness

Jason F. Sirois

Witness

Susan Sirois

STATE OF MAINE
COUNTY OF KENNEBEC

April 20, 2012

Then personally appeared the above named Jason F. Sirois and Susan Sirois, and acknowledged the foregoing instrument to be their free act and deed.

Before me,

David M. McCullum, Attorney at Law

D McCullum

SCHEDULE A

A certain lot or parcel of land, together with any buildings thereon, situated in the City of Augusta, County of Kennebec, State of Maine, bounded and described as follows:

BEGINNING in the north side of the Belfast Road at a point where the west line of the road leading to Cross Hill strikes the same;

THENCE Northerly in the westerly line of Cross Hill Road to land now or formerly of Joseph Latno;

THENCE Westerly in the south line of Joseph Latno and in a line which shall be a direct westerly extension thereof to land now or formerly owned by the heirs of Allen Lambard;

THENCE Southerly in the easterly line of Lambard to land of Joseph Latno;

THENCE in a Southerly and Easterly direction in the northerly line of Joseph Latno and the northerly line of the cemetery and again in the northerly line of Joseph Latno to the north line of the Belfast Road;

THENCE Easterly in the north line of the Belfast Road to the west line of the Cross Hill Road and the point of beginning.

EXCEPTING therefrom the following described property:

1. Parcel conveyed to the State of Maine by Condemnation dated August 10, 1955, recorded at the Kennebec County Registry of Deeds in Book 1011, Page 334.

2. Parcel conveyed to Norman O. Moore, Jr. by deed dated August 14, 1973, recorded at the Kennebec County Registry of Deeds in Book 1682, Page 325.

3. Parcel conveyed to Norman O. Moore, Jr. and Barbara Moore by deed dated August 14, 1973, recorded at the Kennebec County Registry of Deeds in Book 1856, Page 126.

4. Parcel conveyed to Arthur E. Newell and Phyllis M. Newell by deed dated May 31, 1979, recorded at the Kennebec County Registry of Deeds in Book 2210, Page 186.

5. Parcel conveyed to Norman O. Moore, Jr. and Barbara Moore by deed dated November 15, 1999, recorded at the Kennebec County Registry of Deeds in Book 6100, Page 134.

6. Parcel conveyed to Curt D. Stecher by deed dated July 1, 2004, recorded at the Kennebec County Registry of Deeds in Book 8022, Page 103.

7. Parcel reserved by Brian E. Haskell described as follows:

   Bounded on the north by the Belfast Road; southerly and westerly by land of Joseph Latno; easterly by the Bolton Hill Road.

ALSO EXCEPTING and RESERVING that tract of land located approximately eight hundred twenty (820) feet northwesterly from the Cross Hill Road and on the northeasterly side of North Belfast Avenue in the City of Augusta, Kennebec County, Maine, described as follows:

BEGINNING at the most southerly corner of Phyllis M. Newell (reference Book 2210, Page 186) and on the northeasterly right of way line of North Belfast Avenue, the point

being North 19° 56' 19" East and a distance of eighty-six hundredths (0.86) feet from a 5/8 inch rebar found in 2010;

THENCE North 19° 56' 19" Eat along the southeasterly line of Newell for a distance of two hundred seven and seventy-two hundredths (207.72) feet to a 1¼ inch pipe found in 2010 at the most easterly corner of Newell and a southwesterly line of other land of Chad C. and Becky J. Haskell (reference Book 8931, Page 315);

THENCE South 78° 27' 44" East along a southwesterly line of Haskell (reference Book 8931, Page 315) for a distance of twenty and thirty-eight hundredths (20.38) feet to a 5/8 inch rebar (PLS 419) found in 2010 at the southwesterly corner of land formerly of Chad C. Haskell alone (reference Book 6192, Page 232);

THENCE North 11° 46' 40" East along a southeasterly line of Haskell (reference Book 8931, Page 315) for a distance of two hundred forty-nine and ninety-three hundredths (249.93) feet to a 5/8 inch rebar (PLS 419) found in 2010 at the northwesterly corner formerly of Chad C. Haskell alone (reference Book 6192, Page 232);

THENCE South 78° 13' 20" East along a southwesterly line of Haskell (reference Book 8931, Page 315) for a distance of two hundred fifty-four and ninety-one hundredths (254.91) feet to a 5/8 inch rebar set in 2010;

THENCE South 11° 46' 40" West along land formerly of Chad C. Haskell alone (reference Book 6192, Page 232) for a distance of two hundred forty-nine and ninety-three hundredths (249.93) feet to a 5/8 inch rebar set in 2010 on a northeasterly line of Haskell (reference Book 8931, Page 315);

THENCE South 52° 23' 36" West along a northwesterly line of Haskell (reference Book 8931, Page 315) for a distance of two hundred seventy and fifty hundredths (270.50) feet to a 5/8 inch rebar set in 2010 on the northeasterly right of way line of North Belfast Avenue;

THENCE Northwesterly along a curve concave to the north, having a length of one hundred twenty-eight and sixty-nine hundredths (128.69) feet and a radius of eleven thousand five hundred nine and nineteen hundredths (11,509.19) feet to the point of beginning, the chord bearing and distance being North 78° 23' 20" West and one hundred twenty-eight and sixty-eight hundredths (128.68) feet.

MEANING and intending to describe two and forty-one hundredths (2.41) acres of land shown as a proposed parcel on a Plan entitled "Boundary Survey, Chad Haskell Proposed Parcel, North Belfast Avenue, Augusta, Kennebec County, Maine," by E.S. Coffin Engineering & Surveying, Inc., dated December 14, 2010.

SUBJECT to drainage rights described in the Maine Highway Commission taking dated August 10, 1955, recorded at the Kennebec County Registry of Deeds in Book 1011, Page 334.

THE description for this reserved parcel was prepared by Kane P. Coffin, PLS 1292.

BEING the same premises conveyed in a deed from Chad C. Haskell and Becky J. Haskell to Jason F. Sirois and Susan Sirois, dated December 20, 2010, recorded at the Kennebec County Registry of Deeds in Book 10627, Page 254.

DM-4181

NO TRANSFER TAX PAID

Doc # 2012025004
Book 11168 Page 0302

Received Kennebec SS.
09/19/2012 11:50AM
Pages 4 Attest:
BEVERLY BUSTIN-HATHEWAY
REGISTER OF DEEDS

WARRANTY DEED

KNOW ALL MEN BY THESE PRESENTS, that it, **AUGUSTA CONGREGATION OF JEHOVAH'S WITNESSES**, of a Maine corporation having a principal place of business in Augusta, Maine, for consideration paid, grant(s) to **AUGUSTA CONGREGATION OF JEHOVAH'S WITNESSES**, of a Maine corporation having a principal place of business in Augusta, Maine, with **WARRANTY COVENANTS,** certain lots or parcels of land, together with any buildings thereon, situated in the City of Augusta, County of Kennebec, and State of Maine, bounded and described as follows:

See Schedule A attached hereto and incorporated herein by reference.

WITNESS its hand and seal this 20th, day of August, 2012.

Signed, Sealed and Delivered
in the presence of:

Bonnie J C
Witness

Bonnie J C
Witness

Bonnie J C
Witness

AUGUSTA CONGREGATION OF
JEHOVAH'S WITNESSES

By: Dennis Snelling, President

By: Gary Grard, Secretary

By: Richard Barcia, Treasurer

STATE OF MAINE
COUNTY OF KENNEBEC

August 20, 2012

Then personally appeared the above named Dennis Snelling, Gary Grard and Richard Barcia, and acknowledged the foregoing instrument to be their free act and deed, in their said capacity.

Before me,

Bonnie J C
Notary Public/~~Attorney at Law~~

Printed Name:
Commission Expires:

BONNIE J CLOUTIER
NOTARY PUBLIC-MAINE
MY COMMISSION EXPIRES
MAY 27, 2014

SEAL

(4) D. McCallum

SCHEDULE A

PARCEL ONE:

A certain lot or parcel of land, together with any buildings thereon, situated in the City of Augusta, County of Kennebec, State of Maine, bounded and described as follows:

BEGINNING at an iron in the southerly line of Eastern Avenue a the northwest corner of land conveyed by Titcomb Real Estate Association to William Sprague, by deed of June 2, 1951, recorded at the Kennebec County Registry of Deeds in Book 904, Page 141;

THENCE running westerly in the southerly line of Eastern Avenue a distance of ninety-nine and thirty-five hundredths (99.35) feet to an iron at the northeast corner of land of Harold D. Jennings (see Kennebec County Registry of Deeds Book 577, Page 62);

THENCE turning an interior angle of 89° 54' and running southerly in the easterly line of said Jennings passing over an iron one hundred forty and ninety-four hundredths (140.94) feet distant at the southeast corner of land of said Jennings a distance of two hundred (200) feet to an iron;

THENCE turning an interior angle of 90° 6' and running easterly ninety-eight and nine tenths (98.9) feet to an iron at the southwest corner of land of William Sprague;

THENCE turning an interior angle of 90° and running northerly in the westerly line of said Sprague a distance of two hundred (200) feet to the point of beginning, said line making an interior angle of 90° with the southerly line of Eastern Avenue.

BEING the same premises conveyed in a deed from Clinton A. Plummer to Augusta Congregation of Jehovah's Witnesses, dated October 13, 1958, recorded at the Kennebec County Registry of Deeds in Book 1132, Page 45.

PARCEL TWO:

A certain lot or parcel of land, together with any buildings thereon, situated in the City of Augusta, County of Kennebec, State of Maine, bounded and described as follows:

BEGINNING at an iron pin marking the southeast corner of land now or formerly of George Bucknam;

THENCE proceeding in a generally westerly direction along the southerly line of land of Bucknam and the southerly line of land currently owned by Grantee to an iron pin marking the southwest corner of Grantee's existing lot;

THENCE proceeding in a generally southerly direction along the westerly line of Grantee's existing property, extended southerly to a point on the north line of land now or formerly owned by the State of Maine;

THENCE proceeding in a generally easterly direction along the northerly line of State of Maine property to a point marking the southwest corner of property conveyed this date by Grantor to Thomas Curtis, et al;

THENCE proceeding in a generally northerly direction along the westerly line of property of Curtis to a point on the southerly line of Eastern Avenue;

THENCE proceeding in a generally westerly line along the southerly line of Eastern Avenue to an iron pin marking the northeast corner of land of George Bucknam;

THENCE proceeding in a generally southerly direction one hundred ninety-nine and eight tenths (199.8) feet along the westerly line of said Bucknam to the point of beginning.

REFERENCE is made to a survey entitled "Property of Salter Corporation," dated January 7, 1975, by Coffin Engineering and Survey.

BEING the same premises conveyed in a deed from Helen C. Jones, Trustee of the Jones Trust, to Augusta Congregation of Jehovah's Witnesses, dated December 1, 1982, recorded at the Kennebec County Registry of Deeds in Book 2528, Page 173.

Said Parcel Two is SUBJECT to an easement granted to the Augusta Sanitary District, as described in an instrument dated March 8, 1984, recorded at the Kennebec County Registry of Deeds in Book 2774, Page 328.

PARCEL THREE:

A certain lot or parcel of land, together with any buildings thereon, situated in the City of Augusta, County of Kennebec, State of Maine, bounded and described as follows:

COMMENCING at a point located on the southerly side of Eastern Avenue in said Augusta which point marks the northwesterly corner of a parcel of land described in a deed of George W. Bucknam and Helen C. Bucknam to George W. Bucknam, recorded at the Kennebec County Registry of Deeds in Book 1563, Page 137, and the northeasterly corner of a parcel of land described in a deed to the Augusta Congregation of Jehovah's Witnesses recorded at the Kennebec County Registry of Deeds in Book 1132, Page 45;

THENCE in a southerly direction along the easterly line of land of the Augusta Congregation of Jehovah's Witnesses two hundred (200) feet, more or less, to an

Major Application Project Narrative

Project Description

The Augusta Kingdom Hall of Jehovah's Witnesses is proposing to construction of a new place of worship with an attached one-bedroom apartment, associated parking, access drive, and utilities. The access drive will be off of Cross Hill Road.

The topography for this project was obtained from aerial photography and has been field verified as generally correct for the site. The stormwater management system as shown on the permitting plans will work to effectively control the rate of surface water leaving the site. Stormwater conditions have been analyzed for the 2, 10 and 25 year storm events. Stormwater flow paths will generally remain the same across the site with no net increase in flow rate.

Below are pictures of the site and the streetscape of the surrounding area.

Below are pictures of recently completed projects.

Photos

Recently Completed Projects

Kingdom Hall: Bar Harbor, Maine

Kingdom Hall: Kennebunk, Maine

Pollution

The proposed development is typical for this location and the type of land the project is situated on. There are no adjacent flood plains and no flooding issues are anticipated. Subsurface conditions were investigated as part of the septic design and the soils present are adequate for subsurface septic disposal. Slopes throughout the portion of the site to be developed are gradual and conducive to construction. No adverse effects to water, soil or air are anticipated.

Water

A new well will be drilled to adequately serve the development with potable water. No connection to municipal water is proposed. Anticipated water demands associated with this project are similar to a large residential house, no issues with water supply are anticipated.

Soil Erosion

Care will be taken before, during and after construction to ensure that all disturbed ground is stabilized and will not result in unreasonable soil erosion. See the attached Erosion and Sediment Control Plan.

Road Congestion and Safety

The proposed development will not cause any unreasonable highway or road congestion. Attached is a letter addressing traffic movement at the site has been included with this application. Internal circulation was also reviewed, adequate parking spaces and drive aisle widths have been provided to allow for safe vehicular movement throughout the site.

Sewage Waste Disposal

Maine-Land Development Consultants, Inc. (Licensed Site Evaluators) were contracted to perform a septic design for the project. A copy of the septic design and HHE-200 for will be submitted when a plumbing permit is applied for.

Solid Waste

Solid waste is expected to be minimal in output, similar to that of a single family residence. Solid waste disposal can easily be taken care of by a local contractor.

Aesthetic, Cultural and Natural Values

The proposed project will not adversely affect the visual quality of the area. The development sits well behind the required setbacks and will have natural as well as new landscaped buffers to shield it from surrounding properties and roads. All clearing of woods is specifically limited to provide buffers between adjacent properties and will be limited to the extent required for construction and stormwater management. Additionally, the site will be landscaped to provide a pleasing atmosphere. Additionally, the site does not fall within any known significant wildlife habitat zones.

Conformity with City Ordinances and Plans

The proposed development has been designed to conform with City Ordinances, Plans and Policies.

Financial and Technical Ability

See attached letter from Maine Regional Building Committee regarding the overall cost of the project and the financial arrangements.

Surface Water, Shoreland and Outstanding Rivers

Ground Water

The nature of the proposed construction of a place of worship will not likely contribute to groundwater degradation. This use is typical for the area and will not affect the groundwater quality or quantity. The following are factors which contribute to the preservation of groundwater quality on the subject site.

- There will be no underground oil/fuel storage tanks.
- Contractor shall be responsible to have a spill-prevention and action plan during construction.
- There are no disposal areas designated for solid waste disposal.
- There are no sand and gravel aquifers found within the vicinity of the site.
- The site will be served by a new private sewer system with a disposal field.
- Road salt will be applied to the parking and roads in quantities similar to normal roadway application and as such no significant impact is anticipated.

Flood Areas

No portion of the development falls within a flood zone, see FIRM maps attached to this application.

Freshwater Wetlands

A wetland investigation was done on the portion of the site to be developed, no wetland were found. The back portion of the site, which is to remain undeveloped, was not investigated at this time.

Stormwater Management

See attached Stormwater Narrative.

Access to Direct Sunlight

The tallest structure on the sight is approximately 20’ in height. No future development is planned.

State Permits

The applicant is submitting a Stormwater Permit by Rule Application to the Maine Department of Environmental protection for the proposed impervious area. This impervious area is in the form of paved parking, access drive and building. The site is currently undeveloped and covered by meadow and forest. The total impervious area encompassed by this project will be less than one acre.

Outdoor Lighting

See Photometrics Site Plan included in submission.

Neighborhood Compatibility

The proposed development was designed according to the character and natural features of the site to avoid any negative impact. Religious uses are acceptable in the RRES zone. The building design, size and scale are all appropriate to the site and the surrounding properties. The proposed building is a one-story structure, with a maximum height of 20’ which will fit into the character of adjacent structures. Building placement was also considered in orientation to the natural slope of the ground to reduce excessive cutting or filling.

Compliance with Plans and Policies

The proposed development has been designed to conform with City Ordinances, Plans and Policies.

Traffic Pattern, Flow and Volume Analysis

The proposed development will not cause any unreasonable highway or road congestion. A letter addressing traffic movement at the site has been included with this application. Internal circulation was also reviewed, adequate parking spaces and drive aisle widths have been provided to allow for safe vehicular movement throughout the site.

Public Facilities

The proposed development will have private water and sewer service, and the stormwater system will be on-site. Electrical and telephone service will be connected to adjacent existing services. A new utility pole will be installed near the closest existing utility pole on N. Belfast Ave. and service will be overhead to the new pole, then underground to the building.

Resource Protection and the Environment

The area to be developed does not include known sensitive areas. Generally the site slopes to the west at 5-7%. There is an area along the access drive with slopes around 15% where additional care will be taken to ensure that soil erosion does not take place. These measures are discussed in the Erosion and Sediment Control Narrative of the PBR Application which is attached to this application, all measures conform to MDEP standards. Sanitary sewer will be collected and treated on site in a private septic system.

Performance Standards

The proposed project was designed in accordance with the Performance Standards outlined in the Land Use Ordinance for the City of Augusta. There will be no adverse noise, heat or glare created by the use of this facility. Exterior lighting and landscaping take into consideration the ordinance requirements and the effect on adjacent properties and streets. A permit for the sign will be obtained after Planning Board approval is granted.

Financial and Technical Ability

See attached letter from Maine Regional Building Committee regarding the overall cost of the project and the financial arrangements.

EROSION AND SEDIMENT CONTROL PLAN
Augusta Kingdom Hall of Jehovah's Witnesses

April 10, 2014

Narrative
The proposed project will require earthmoving activities, including the disturbance of existing soils and the placement of new fill for the parking lot and building pads. The potential for minor erosion exists throughout the site during earthmoving activities. It is expected that grading will commence in the summer of 2014, with final stabilization in the fall of 2014. Winter construction is not anticipated. Erosion will be controlled by two main methods. The first will be to reduce initial erosion by protecting bare soils. Regular mulching will be applied throughout construction to minimize initial disturbance and erosion control blankets will be applied to slopes steeper that 3:1 after final grading. The secondary method will be to control and catch the sedimentation. This will be done through the use of silt fence and stone check dams.

Existing Erosion Problems
There are no known significant erosion issues in the vicinity of the project.

Protected Natural Resource
There are no known natural resources or wetlands in the portion of the site to be developed.

Erosion Control Measures
Erosion control measures include but are not limited to the following:

- All disturbed areas are to be loamed, seeded and stabilized with mulch or geotextile fabric.
- Silt fencing or bark mulch berms will be installed down to gradient of all grubbing and earth moving activities.
- Temporary grass or legume cover will be installed on dormant stockpiles and construction during the non-growing season.
- Water will be utilized to control dust if necessary.
- Construction entrances will be installed to minimize materials being carried off site by construction vehicles.
- Stormwater detention basins will be used during construction as temporary sediment settling ponds.

Site Stabilization
Items listed in Erosion Control Measures will be incorporated before and during construction for site stabilization. The anticipated date of final stabilization is the fall of 2014.

Erosion and Sediment Control Plan
Refer to the attached plan entitled "Grading, Utility & Erosion Control Plan" which includes the following:

- Contours
- Erosion and sediment control plan elements

- Land cover types and boundaries
- Locations(general)
- Locations of controls
- Disturbed areas

Details and Specifications
Refer to the attached site plan package which includes details of erosion control measures and a description of the sizing, spacing and stabilization of each erosion control measure.

MAINTENANCE OF STORMWATER SYSTEM

The project's stormwater management system will require regular maintenance. The following are the maintenance requirements that will be cared for by the Owner. The Owner will be responsible for ensuring that maintenance will be completed in a timely manner, during and after construction.

LONG TERM MAINTENANCE PLAN:
Inspect 2 times annually on or about May 1 and November 1 minimum and after severe storms.

1. Ditches

a. Rip-rap lined ditches
- Inspect semi-annually

b. Maintenance
- Remove sediment buildup, leaves, litter or other debris from the bottom and side slopes.
- Reposition stones to restore channel to original dimensions.

c. Vegetated Ditches
- Inspect the ditch lining monthly for slumping of the lining, down cutting of the ditches base, or undercutting of the banks.

d. Maintenance
- Repair immediately.
- Mow or brush-cut annually to prevent the establishment of woody vegetation.

2. Pipes

b. Inspect for sediment buildup.

c. Maintenance
- Flush pipes and remove sediment at which time the depth of sediment at any location in the pipe exceeds 3 inches.

3. Rip-Rap protection

a. Inspect semi-annually or after severe storms for dislodged stones or slumping of the stone lining.

b. Maintenance
- Reposition stones to restore the pathway's original dimensions and a uniform surface.
- Clean any accumulated sediments and debris from the soil filter outlet.

4. Vegetation

a. Inspect vegetated areas each spring.

b. Maintenance

- Re-seed and mulch areas where cover is less than 90%.
- Rework seed and mulch areas that have spotty plant germination and are sparsely vegetated, or where soil erosion is evident.

5. Stone Check Dams

*Prior to establishment of permanent vegetation

a. Inspect check dams after each storm event until permanent vegetation is established.

b. Maintenance

- Remove sediment buildup behind check dams.

**After establishment of permanent vegetation

a. Inspect for sediment build-up in void space between stones and dislodged stones.

b. Maintenance

- Remove sediment build-up.
- Seed and mulch disturbed areas.
- Replace check dam if sediment is filling void space.
- Replace dislodged stones.

6. Parking Areas

a. Maintenance

- The parking areas shall be swept as needed to maintain. In particular, sweeping will occur in late winter or early spring to remove the winter's accumulation of sand and abrasives.

General site area Maintenance

1. Side slopes of gravel surfaces and embankments

a. Inspections

- Inspect slopes for rill erosion due to concentrated flows.

b. Maintenance

- Replace topsoil and reseed eroded slopes.

i. Detention Pond

a. Inspect the embankments and side slopes for sloughing or rills. Inspect rip-rap in channels and emergency spillway for scour beneath the stone or dislodged stones. Inspect outlet pipe for soil infiltration and sediment buildup in pipe. Inspect line and grade of pipe and verify conformance with plan.

b. Maintenance

- Mow the embankment and side slopes to prevent the establishment or propagation of woody vegetation.
- Repair rills or sloughing immediately. Add loam, seed, and mulch as required. If sloughing continues, replace with rip-rap slope protection. All work is to be performed

following the BMP's in the Maine Sediment and Erosion Control Handbook for Construction.

- Repair or replace filter fabric and replace stones as necessary to maintain in accordance with Construction Details and BMP's in the Maine Sediment and Erosion Control Handbook for Construction.
- Remove sediments when depth is 20% of pond depth.
- Cut and remove any woody vegetation growing within the pool.

Maintenance Log for Storm water Management System

Month of_____, 20___

Item	Date/Personnel	Comments

April 9, 2014

Planning Board
City of Augusta, Planning Department
City Center Plaza
16 Cony Street
Augusta, ME 04330

Re: Traffic Summary Letter, Proposed Kingdom Hall of Jehovah's Witnesses

Dear Sir or Madam:

The Augusta Congregation of Jehovah's Witnesses is planning to construct a new Kingdom Hall with proposed access from Cross Hill Road. This letter is intended to provide information regarding vehicle trip generation and other traffic considerations related to the proposed development, as required by the City.

The proposed building consists of an approximately 3,960 sf place of worship with a small 692 sf apartment within the same building. Total building footprint will be approximately 4,652 sf. The site is located near the corner of Cross Hill Road and State Route 3/9/US 202 (North Belfast Avenue), and has frontage on both roads.

Based on safety consideration and consultation with Maine Department of Transportation (MDOT), the owner has decided to provide a longer access drive to the proposed structure from the low volume Cross Hill Road instead of accessing the site from State Route 3/9/US 202 (North Belfast Avenue). This has the benefit of not introducing a new point of entry on a high volume State Route, but instead utilizes an existing intersection. The drive location on Cross Hill Road provides adequate sight distances and a safer entry point.

Trip Generation

Vehicle trips expected to be generated by the proposed development were calculated based on the trip generation rates presented in the 7th Edition of Trip Generation published by the Institute of Transportation Engineers (ITE). This publication provides projections of trip generation based on the intended use of the proposed facility. Trip generation data from ITE for Land Use Code 560 ("Church") and Land Use Code 220 ("Apartment") were used for projecting trip generation for proposed building.

According to ITE, the use for the proposed project will overall generate more traffic during the weekends than the weekdays, specifically Sunday. Therefore, trip generation calculations were only performed for the weekend Sunday condition. The proposed structure has 1 apartment ("dwelling unit") and 3960 sf "Church" use occupancy. The following Table presents a summary of the vehicle trip generation calculations:

Alina Watt, PE
Phone: 207- 664-0930
Contact Address: PO Box 668, Ellsworth, ME 04605
E-mail: alina@hedeng.co

Summary of Proposed Trip Generation Calculations

Time Period	Land Use Code	Variable	Trip Rate	Trips	Total
Sunday	560 – Church	3960 sf	36.63	145.1	**145 trips/day**
Sunday	220 - Apartment	1 Dwelling Unit	5.86	5.86	**6 trips/day**
				Total Daily Trips:	**151 trips/day**
Sunday – Peak Hour	560 – Church	3960 sf	11.76	46.6	**47 trips/hour**
Sunday – Peak Hour	220 – Apartment	1 Dwelling Unit	0.51	0.51	**1 trip/hour**
				Total Peak Hour Trips:	**48 trips/hour**

A total of 48 Sunday Peak Hour trips and 151 daily trips are anticipated for this development. It is anticipated that the vast majority of vehicles utilizing the site will be passenger cars, light trucks and sport utility vehicles. A small percentage of traffic will likely include single unit vehicles such as oil and/or propane delivery trucks.

Traffic Impact of Proposed Development

The project is proposed to have a driveway on Cross Hill Road approximately 220 ft from the State Route 3/9/US 202 (North Belfast Avenue) intersection, which is a relatively high-volume State Route. There is a High Crash Location (HCL) listed by the Maine Department of Transportation (MDOT) along a stretch of State Route 3/9/US 202 from Hayden Road to Weeks Mills Road, approximately 1 mile away from the proposed development at the closest point. It is our opinion that the proposed increase in traffic at the project site is so minor that it will not adversely affect this stretch of road. It is also our opinion that, by inspection, the increase in overall daily vehicle traffic generated by the proposed development (151 trips/day) is so minor as to be negligible (less than 2%) in comparison to the existing vehicle traffic on State Route 9/3/US 202, which according to the 2011 traffic counts is approximately 9,630 at the Cross Hill Road intersection. This is using the conservative assumption that everyone leaving the proposed building turns right on Cross Hill Road to enter this intersection. Likewise, the vehicle trips generated during the weekend peak hour (47 trips/hr) is similarly insignificant. Based on the current configuration we do not believe that a traffic movement permit will be required from MDOT for this project.

Conclusion

It is our opinion that the level of traffic generated by this proposed facility will not negatively affect the overall traffic flow of State Route 9/3/US 202 (North Belfast Avenue) or the general vicinity.

We trust this analysis is adequate for your needs but please do not hesitate to contact us should you need additional information (664-0930, alina@hedeng.co)

Sincerely,

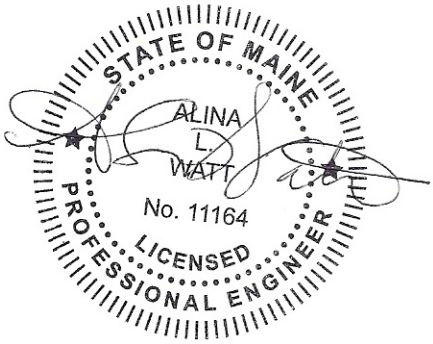

Alina Watt, PE, LEED AP
Project Engineer

Projects/KH/Augusta/documents/Traffic Letter.doc

Maine Regional Building Committee Technical Capacity

Narrative

Because of the urgent need for new Kingdom Halls and disaster relief, Jehovah's Witnesses have set up committees of spiritually qualified men who are able to assist in the organizing of the building and remodeling of places of worship. Every year approximately 200 new Kingdom Halls are constructed globally and another 200 are renovated under the direction of these committees. The entire arrangement is accomplished through the Christian spirit of giving and self-sacrifice.

The Maine Regional Building Committee of Jehovah's Witnesses has been operating since 1983 and since that time has been responsible for the construction and renovation of Kingdom Halls throughout the entire State of Maine. In the past few years, several Kingdom Hall projects were completed here in Maine by this delivery method, including projects in Bar Harbor, Presque Isle, and Kennebunk.

This work is accomplished through a carefully structured system of departments with qualified overseers in each department. Licensed professionals kindly volunteer their time and skill to help in the completion of each project. Volunteers assemble at specific times and complete their assigned job pertinent to each part of the construction. Such ones are trained to work in construction departments such as: Sitework, Concrete, Framing, Plumbing, Masonry, Cabinetry, Roofing, and Landscaping to name a few. Other volunteers serve in supporting roles to the project in departments such as parking, cleaning, first aid, food service, and accounting.

Enclosed with this narrative are resumes and relevant experience of the individuals who are volunteering to serve as the Applicant's permitting agents, and who are performing design and construction administration services for the Sitework and Structural portions of the project.

REPRESENTATIVE SITE DESIGN EXPERIENCE

Kikunol Housing Project, Pleasant Point Reservation, Perry, Maine.

Design and coordination of 22 unit, 5 building Townhouse project for the Pleasant Point Passamaquoddy Housing Authority. The project was initially a Low Income Tax Credit Housing Project but later became a HUD Native American set aside project using ARRA funds. The project includes site planning and layout, stormwater management, sidewalks design and permitting, extension of sewer and water mains, roadway and parking lot design, playground, landscaping, site lighting, agency coordination and review (USDA/RD & MSHA) bidding and construction services. Phase I & II are complete.

Northeast Creek Housing, Bar Harbor, Maine.

Civil design and Site Location of Development Permit preparation for new 30 unit workforce housing project. Project includes re-construction of existing road, design of new road, engineered on-site wastewater disposal system (including a complete gravity sewer system and services to all homes), a water distribution system, stormwater analysis and control plan, bidding and construction services. Project is a low-impact housing project designed in collaboration with "green" building design, which is to be sensitive to its environmental impact. Concept design, layout and site programming coordinated with Coplon Associates, Landscape Architects. Project is complete.

Ripples Hill Housing Project, Mount Desert, Maine.

Civil design and storm-water permit preparation for new 19 unit workforce housing project. Project includes design of new road, extension of public sewer system, water and underground power distribution design, bidding and construction administration services. Project is a low-impact housing project designed in collaboration with "green" building design, which is to be sensitive to its environmental impact. Concept design, layout and site programming coordinated with Coplon Associates, Landscape Architects. Phase I complete, Phase II near completion.

Schoodic Education and Research Campus Master Plan, Acadia National Park, Maine.

Civil engineering investigation, evaluation and design support for implementation of new master plan for educational campus. The project includes planning for re-location of access drives, pathways, sidewalks, parking lots, storm-water management systems, water mains, sanitary septic mains and landscaping in coordination with Coplon Associates and Roc Caivano Architects. Extensive rehabilitation of parking lots and roadways included grinding, subgrade improvement and paving. Site design included LID stormwater treatment methods, minimizing impacts of drives and parking, investigation of utilities, protecting existing trees and vegetation and minimizing overall land disturbance. Project includes preliminary design and estimating services. Project is complete.

Davis Residential Village, College of Atlantic, Bar Harbor, Maine.

Civil design and permitting consultation for new Student Housing and Student Center Project. Project is a low-impact, high efficiency project which is to be sensitive to its environmental impact and long term energy use. Project includes site design and layout for conventional sewer and composting toilets, water main extensions, storm-water control plan and erosion control plan. Concept design, grading, layout and site programming coordinated with Coplon Associates, Landscape Architects. Project complete.

Jordan Pond House: Acadia National Park, Mount Desert Island, Maine.

Engineering support and design with Coplon Associates of new circulation and parking layout for historic Jordan Pond House. Project included complete re-design of charter vehicle drop off areas, delivery truck access and vehicular

circulation. It also included new sidewalks, drainage, utility coordination, trellis and fence re-construction, bidding and construction phase services. Project is complete.

Bar Harbor Bank and Trust – Ellsworth Branch, Ellsworth, Maine

Structural and civil design of new 5,600 square foot branch office. Building was designed using steel fame, energy efficient SIP panels and custom timber trusses to provide an open, airy atmosphere. Civil design included site layout and circulation analysis, Stormwater Management system, State and local permitting, extensive retaining walls to accommodate significant grade challenges on site and utility extensions. Structural design included steel frame, steel moment frames, SIP panel design, foundation design and timber truss design. Project under construction. Project Architect is Theriault/Landman Associates.

Mary Dow Cancer Center, Maine Coast Memorial Hospital, Ellsworth, Maine.

Civil design for new, 3,000 SF cancer center addition to the hospital. Work included civil design for addition and new hospital entrance area. It also included new heated sidewalks, drainage, grading, utility coordination, site lighting design, retaining wall design, planning board permitting, Site Law modification, construction, bidding and construction phase services. Project is under construction.

Maine Coast Heritage Trust Office Building, Mount Desert, Maine.

Design of site for new LEED accredited 3,600 square foot office building project with Stewart Brecher Architects. Project includes site design intended to minimize environmental impacts in harmony with the mission statement of Maine Coast Heritage Trust, a land conservation group. Site design for LEED points included LID storm-water treatment methods, minimizing impacts of drives and parking, protecting existing trees and vegetation and minimizing overall land disturbance. Project included design and construction phase services. Project is complete and received LEED Gold certification.

Woolwich PreK-8 Community School, Lewis & Malm Architecture.

Coordinate the site design and permitting of 23 +/- acre site for the construction of a new School. The existing school will be partially demolished with the remaining portion renovated and extended. Project includes the design of roadways, parking lots, ball fields, extension of potable water system, upgrades to wastewater system and storm drainage. Permitting includes MDEP Site Location of Development application with full storm-water management system utilizing ponds, and buffers for phosphorus treatment in sensitive lake watershed. Concept design, layout and site programming coordinated with Coplon Associates, Landscape Architects. Project under construction.

Ashland PreK-12 Community School, Lewis & Malm Architecture.

Coordinate the site design and permitting of 15 +/- acre site for the construction of a new School. Project includes the design of roadways, parking lots, ball fields, water, wastewater and storm drainage. Permitting includes MDEP Site Location of Development application with full storm-water management system utilizing ponds, bio-swales and under-drained soil filters. Concept design, layout and site programming coordinated with Coplon Associates, Landscape Architects. Project complete.

Seal Harbor Pier Parking Re-construction, Seal Harbor, Maine.

Design of parking lot at Town pier renovations. The existing parking lot was experiencing severe deterioration with sinkholes frequently appearing due to water and wave action. Project included complete removal and replacement of the existing parking surface and subsurface, the installation of geo-membranes and new drainage structures. Services included bidding and construction administration and observation services. Project is complete.

Nicolin Road Re-Construction, Ellsworth, Maine.

Design of approximately 0.6 miles of road re-construction. The project included the complete removal and reconstruction of a City road. It included geotechnical evaluation, roadway design (including horizontal and vertical alignment modifications), stream crossing design, sub-grade improvement using geogrid, drainage and erosion control plan and pavement design. Project included design and construction phase services, including construction observation. Project is complete.

Hansons Landing Road Re-Construction, Ellsworth, Maine.

Design of approximately 1 mile of road re-construction. The project included the complete removal and reconstruction of a City road. It included geotechnical evaluation, roadway design (including horizontal and vertical alignment modifications), stream crossing design, sub-grade improvement, drainage and erosion control plan for water supply lake watershed, relocation of overhead utility lines and environmental permitting with the State. Project included design and construction phase services, including construction observation. Project is under construction.

Downtown Revitalization, Calais, Maine.

Site design, road and sidewalk reconstruction design for a Downtown Improvements. This community revitalization project includes demolition of buildings, approximately 1,000 feet of State road reconstruction, upgrades to the storm-water collection system, new parking lots, landscaping, walkways, sidewalks, a Community Plaza and approximately 7,000 ft^2 of segmental retaining wall. The project involved MDOT, CDBG and local funding. Project complete. (Eero Hedefine: Project Manager for James W. Sewall Co.)

Sidewalks and Paths

Town of Mount Desert Sidewalk Re-construction, Mount Desert, Maine

Design of approximately 4 miles of Town sidewalks which are severely deteriorated. The project includes the removal and re-setting of old curbing, sidewalk layout and alignment modifications, new walkway structure design, upgrade of drainage structures, and relocation of existing overhead utilities to accommodate ADA requirements. Project includes design and construction phase services, including construction observation. Project is in design.

Bridge Hill Sidewalk Re-Construction, Ellsworth, Maine.

Design of approximately 2,100 linear feet of City sidewalks which are severely deteriorated. The project includes the removal and re-setting of old curbing, sidewalk layout and alignment modifications, new walkway structure design, and relocation of existing overhead utilities to accommodate ADA requirements. Project includes design and construction phase services, including construction observation. Project is complete.

Seal Harbor Sidewalks, Seal Harbor, Maine.

Design of approximately 2,400 lineal feet of new sidewalks and curbing in village center. Project included complete removal and replacement of existing sidewalk system with new granite curb and sidewalk, new transitions to existing walkways along sidewalk length, coordination with adjacent landowners and businesses, bidding and construction services. Project is complete.

Sidewalk Assessment Study, Ellsworth, Maine.

Review and assessment of sidewalks in the Ellsworth downtown area. Project was provided to the City Planning Office to help determine sidewalk priorities for future restoration. Project included analysis of deficiencies and creating opinions of cost for various project improvements. Project complete.

REPRESENTATIVE BUILDING EVALUATION & STRUCTURAL EXPERIENCE

(Including previous experience at other firms)Not included in the listing below are numerous structural analysis projects performed for forensic purposes for insurance company's, banking institutions, and municipalities of both commercial and residential structures of various structural configuration and construction. Building superstructures have included wood frame, pre-engineered steel, structural steel, masonry, reinforced concrete, and concrete masonry unit construction.

Rehabilitate Headquarters Facility Predesign, Acadia National Park, Bar Harbor, Maine

Structural and code compliance evaluation of approximately 12 structures and a public water system for the existing Acadia National Park headquarters complex. The project consists of evaluating the structural systems and existing buildings with regard to current code mandated loading, as well as deficiencies noted. Building types include; proprietary metal building, steel frame with CMU infill buildings, wood frame buildings and concrete/CMU buildings. All buildings were visually surveyed, analyzed and detailed report provided. The intent is to help the Owner decide on whether to renovate the existing facility or look at relocation and new construction and therefore costs of upgrades were also developed. The existing water supply and distribution system was also analyzed. Project will include schematic design of renovations or alternative solutions. Project is ongoing. Project coordinated through Roc Caivano Architects

Jordan Pond House Deck/Roof Evaluation, Acadia National Park, Bar Harbor, Maine

Structural evaluation of existing roof/deck system to evaluate significant deflection. Project includes emergency shoring recommendations and then evaluation of condition, loading parameters and structural modifications for long term support. Project is ongoing. Project coordinated with Roc Caivano Architects.

Wright Hall Existing Conditions Report, Acadia National Park, Schoodic Point, Maine

Structural and code compliance evaluation of medical clinic building for reuse as an Environmental College Building for the Schoodic Education and Research Center (SERC) complex. The project consists of evaluating the building with regard to current code mandated loading, as well as deficiencies noted. The building was visually surveyed, analyzed and a report provided with detailed structural deficiencies noted, recommendations for upgrades given and cost estimates provided. Roof and frame upgrades were noted and detailed. The report was used to plan and execute the renovation of the building. Project under construction. Project coordinated through Roc Caivano Architects.

Schooner Commons Dining Facility, Acadia National Park, Schoodic Point, Maine

Structural and code compliance evaluation of dining structure for the Schoodic Education and Research Center (SERC) complex. The project consists of evaluating the building with regard to current code mandated loading, as well as deficiencies noted. The building was visually surveyed, analyzed and a report provided with detailed structural deficiencies noted, recommendations for upgrades given and cost estimates provided. The report was used to plan and execute phased renovation of the building. Project under construction. Project coordinated through Roc Caivano Architects.

Port Security Building, Bar Harbor, Maine

Structural design of new port security building for Town of Bar Harbor. Building is attached to pier on one side and supported by wood column foundation over the ocean due to marine impact restrictions. Building is 2 story steel frame and designed for marine loading on foundation support system. Project in design. Project coordinated with Design Group Collaborative.

Bar Harbor Bank and Trust – Ellsworth Branch, Ellsworth, Maine

Structural and civil design of new 5,600 square foot branch office. Building was designed using steel fame, energy efficient SIP panels and custom timber trusses to provide an open, airy atmosphere. Structural design included steel frame, steel moment frames, SIP panel design, foundation design and timber truss design. Project under construction. Project Architect is Theriault/Landman Associates.

Eastern Machias Aquatic Research Center, East Machias, Maine

Structural evaluation and design of modifications to existing industrial building. Building served as a power station in the past and is being renovated to serve as a research center. Work includes evaluation modifications to original steel superstructure, adding of a second floor to the building, roof and wall support upgrades and associated structural work. Project is funded by USDA/RD. Project under construction. Project coordinated through Design Group Collaborative.

Cobscook Bay Resource Center, Eastport, Maine

Structural evaluation and design of modifications and addition to existing structure. A historical building is being renovated and modified to serve as a research center. Work includes new foundation under old building, reinforcing of existing roof and floor systems, structural design of addition to building and associated structural work. Project Phase I complete. Project coordinated through Design Group Collaborative.

Rockefeller Building Renovations, Acadia National Park, Schoodic Point, Maine

Structural upgrade of historical structure for the Schoodic Education and Research Center (SERC) complex. The project consists of evaluating existing structural system impacts for installation of new elevator, as well as deck capacity for future use. Project in design. Project coordinated through Roc Caivano Architects.

St. Croix No. 1 Fire Station Renovations, City of Calais, Maine.

Coordinate the site, structural and architectural renovations to historic fire station. Project includes structural upgrades and renovation to building shell and hose tower. Renovations include extensive repair and replacement of structural systems. Renovation based on structural review and report also provided as part of our services. Phase I renovations complete.

Williamson Residence, Great Cranberry Island, Maine.

Structural design of extensive residential project designed by Van Dam Architecture. Project includes custom roof framing due to complicated roof lines, as well as complicated floor framing plans to provide multiple finish floor elevations throughout. Project complete.

Kikun Housing Project, Pleasant Point Reservation, Maine.

Structural and civil design of 3 apartment buildings for new housing project . Project includes complete civil design, structural design of all buildings, including a semi-circle Community Room, bidding and construction administration services. Project under Maine State Housing Authority jurisdiction and review. Project complete. Architect on project was Design Group Collaborative.

Lee Academy Weymouth Hall Renovations, Lee, Maine.

Renovations to three story, 12,800 SF dormitory. Renovations include upgrades to mechanical, electrical, roof and masonry systems as well as building modifications to address ADA compliance, structural and life safety issues. Services included facility assessment, preliminary and final design, and construction administration and Owner Representative services. Design work accomplished in collaboration with local architectural firm. Project complete. (Project Manager for James W. Sewall Co.)

Eero Hedefine, P.E., LEED AP

Professional Engineer/Principal

Eero Hedefine is the founder and principal of Hedefine Engineering & Design, Inc. His background includes strong experience in civil/structural design and construction. He is a LEED accredited design professional and understands that successful projects must be a collaboration between many disciplines to meet a common goal. He is able to draw on his over 25 years of experience in engineering and most aspects of light to heavy construction to find solutions that work for his clients. He has overall responsibility for all aspects of company engineering projects.

EDUCATION

Bachelor of Science in Civil and Environmental Engineering, University of Maine
Master of Science in Civil Engineering, Structural/Geotechnical, University of Maine

PROFESSIONAL LICENSES, CERTIFICATES & AFFILIATES

Professional Engineer, Maine #10111
LEED (Leadership in Energy & Environmental Design) Accredited Design Professional
Member, American Society of Civil Engineers
Member, Bar Harbor Airport Advisory Committee

Professional Engineer

Founder and President of Hedefine Engineering & Design, Inc, a full-service civil engineering firm. Services include site development and permitting, civil engineering design, structural evaluations and design, construction administration. (5/2005 – Present).

Staff Engineer thru Project Manager for the James W. Sewall Company. Responsible for design and project management for multiple large school, housing, commercial and institutional civil/structural projects. (1998 – 4/2005)

Contractor/Builder

Vice-President of Bay Design and Construction of Hancock, Maine. Firm is general contracting company specializing in custom residential construction. (1991 – 1998)

Designer/Construction Foreman

New York City. Heavy residential and commercial construction, including extensive architectural renovations to meet requirements of Landmarks Preservation Commission. (1985 – 1991)

Alina L. Watt, P.E., LEED AP

Project Engineer

Alina Watt is a project engineer with Hedefine Engineering & Design, Inc. Her background includes experience in civil and structural projects performing analysis and design work in addition to permit preparation. Responsibilities include project coordination, structural analysis, hydrology analysis, permit preparation and geotechnical review.

EDUCATION

Bachelor of Science in Civil and Environmental Engineering, University of Maine

LICENSES, CERTIFICATES & AFFILIATES

Professional Engineer, Maine #11164
LEED (Leadership in Energy & Environmental Design) Accredited Design Professional
Member, American Society of Civil Engineers

Professional Engineer

Project Engineer at Hedefine Engineering & Design, Inc, a full-service civil engineering firm. Services include site development and permitting, civil engineering design, stormwater analysis, structural evaluations and design, construction administration. (8/2012 – Present).

Previous Engineering Experience

Staff Engineer through Project Manager for the James W. Sewall Company. Responsible for design and project management for multiple municipal, commercial and private civil/structural projects; geotechnical design and review support; as well as facility assessments and data management for school districts throughout Maine. (2002 – 7/2012)

Engineer Intern for Georgia-Pacific. Responsibilities included: database creation and management for covered processes in compliance with Federal regulation. (2001 – 2002)

Ryan Flint, E.I.

Staff Engineer

Ryan Flint is a staff engineer with Hedefine Engineering & Design, Inc. His background includes experience with civil and structural projects performing analysis and design work. Responsibilities include structural analysis & design, project coordination, hydrology analysis, permit preparation, construction administration, and drafting.

EDUCATION

Bachelor of Science in Civil and Environmental Engineering, University of Maine

LICENSES, CERTIFICATES & AFFILIATES

Engineer-Intern, Maine #5751
Associate Member, American Society of Civil Engineers

Staff Engineer

Staff Engineer at Hedefine Engineering & Design, Inc, a full-service civil engineering firm. Services include site development and permitting, civil engineering design, stormwater analysis, structural evaluations and design, construction administration. (5/2007 – Present).

Previous Engineering Experience

Engineer Intern for the Hedefine Engineering & Design, Inc. Responsible for design and permitting for school, housing, commercial and institutional civil/structural projects. (6/2006 – 9/2006)

Engineer Intern for the DeLuca-Hoffman Associates, Inc.. Responsibilities included: project submittal correspondence, preparation of permit applications, traffic counts, project plan review and GPS surveying (5/2005 – 8/2005)

Maine Regional Building Committee #1
103 Tripp Road - Ripley, ME 04930
Telephone/Fax: 207/277-5942
E-mail: g_cwebber@hotmail.com

Date: 4/9/2014

To: Augusta Planning Board

Reference: Augusta Kingdom Hall Project

Dear Sir(s),

Attached you will find verification of loan approval for the East Augusta Congregation of Jehovah's Witnesses enabling them to proceed with their project. Included, as well, is page 4 of our S-84 form showing the Project Estimate. The land has already been paid for and the recent sale of their previous building provides them with all funds necessary to complete this project.

Sincerely,

Maine Regional Committee #1

Gregory Webber
Chairman

WATCHTOWER
Bible and Tract Society of New York, Inc.

Accounting Office
25 Columbia Heights, Brooklyn, NY 11201-2483, U.S.A.
Phone: (718) 560-5000 Fax: (718) 560-7146

ASA:ASP January 7, 2014

EAST CONGREGATION
AUGUSTA ME
C/O DENNIS SNELLING
132 WHITEHOUSE RD
VASSALBORO, ME 04989-3632

Approval of Kingdom Hall Loan – Congregation No. 83386

Dear Brothers:

We are writing in behalf of Christian Congregation of Jehovah's Witnesses. We are glad to give a favorable reply to your request for financing. This approval is based on information provided in your Kingdom Hall Loan Application.

Financing is approved for the amount of $310,000 with monthly payments of $1,800. The first monthly payment will be due after your Regional Building Committee (RBC) requests disbursement of the funds. This can be done by having a member of the RBC call the Kingdom Hall Desk in the Service Department.

At your RBC's request, the funds will be placed in your building fund deposit account at the branch office. To confirm that this deposit account is linked to the building fund bank account your RBC will use in connection with this project, please complete the *Authorization Agreement for ACH Debit/Credit Transactions* (TO-60) form and return it to our office. The form is available on the jw.org Web site under the Documents tab.

Note: Since you share responsibility for the loan payment with one or more congregations, the monthly payment is to be made from your operating committee checking account.

This arrangement of providing financing for your congregation is with the definite understanding that the congregation will not, under any circumstances, obtain a loan from another source that would be secured by a Mortgage or Deed of Trust which would be recorded in the land records and could thus convey the Kingdom Hall property to other lenders. In addition, if during the life of this loan you wish to sell any portion of your property, you should first contact the Kingdom Hall Desk.

We pray Jehovah's blessing on all your efforts.

Your brothers,

Watchtower B. & T. Society
OF NEW YORK, INC.

c: ME RBC #1

4. FINANCIAL SUPPORT:

Total anticipated monthly contributions *(4-C) should match the figure on line E of the Congregation Financial Survey and Resolution for a Loan From the Kingdom Hall Fund (S-83).*

Total monthly expenses *(4-D) is the estimated combined total of all monthly expenses for the congregations repaying the loan, including all operation, maintenance, and miscellaneous expenses. The proposed loan payment or donations to the Kingdom Hall Fund or worldwide work are not included.*

The ***maximum monthly loan payment*** *(4-E) should be close to the difference between the total anticipated monthly contributions (4-C) and the total monthly expenses (4-D).*

A.	Proceeds from sale of Kingdom Hall	$	290,000
B.	Anticipated proceeds from future sale of Kingdom Hall	$	0
C.	Total anticipated monthly contributions	$	3400
D.	Total monthly expenses	$	1600
E.	*Maximum* **monthly loan payment** (rounded to the nearest $5)	$	1800

5. PROJECT ESTIMATES:

Estimate the cost for each of the four project components and/or list the desired contribution to another project, if applicable. The ***requested loan*** *amount (5-G) should reflect the difference between the total estimated project cost (5-F) and the sum of all the funds accumulated by the congregation(s), anticipated proceeds from the sale of a Kingdom Hall, and anticipated personal loans and one-time donations.*

A.	Land	$	50,000
B.	Permits and fees	$	4700
C.	Property development	$	245,000
D.	Building	$	300,300
E.	Contribution	$	0
F.	**TOTAL**	$	600,000
G.	**REQUESTED LOAN** (rounded to the nearest $100)	$	310,000

6. CONGREGATION SERVICE COMMITTEE(S):

The names and signatures of the Congregation Service Committee(s) should be in the order listed on the first page, starting with the titleholding congregation. The elders should carefully review the application in its entirety before signing and dating it.

	Coordinator of the body of elders	Secretary	Service overseer
1.	(Signature)	(Signature)	(Signature)
	Dennis Snelling (Print name)	Gary Grard (Print name)	Richard Barcia (Print name)
2.	(Signature)	(Signature)	(Signature)
	David Berger (Print name)	Jack Bickford (Print name)	John Gomm (Print name)
3.	(Signature)	(Signature)	(Signature)
	(Print name)	(Print name)	(Print name)
4.	(Signature)	(Signature)	(Signature)
	(Print name)	(Print name)	(Print name)
5.	(Signature)	(Signature)	(Signature)
	(Print name)	(Print name)	(Print name)
6.	(Signature)	(Signature)	(Signature)
	(Print name)	(Print name)	(Print name)

DATE: 10-13-13

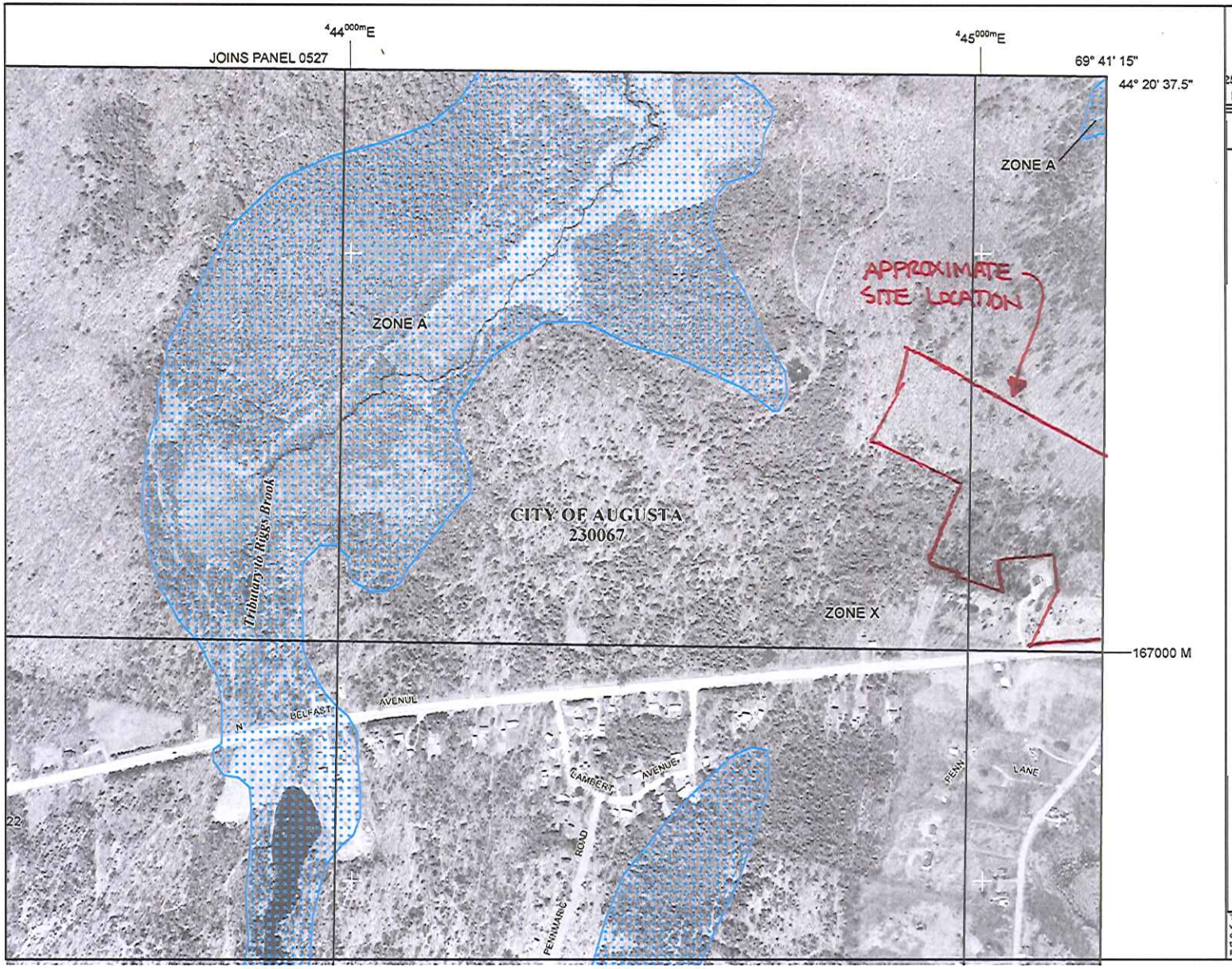

MAP SCALE 1" = 500'

250 0 500 1000 FEET

METERS

NFIP

NATIONAL FLOOD INSURANCE PROGRAM

PANEL 0529D

FIRM

FLOOD INSURANCE RATE MAP

KENNEBEC COUNTY, MAINE

(ALL JURISDICTIONS)

PANEL 529 OF 775

(SEE MAP INDEX FOR FIRM PANEL LAYOUT)

CONTAINS:

COMMUNITY	NUMBER	PANEL	SUFFIX
AUGUSTA, CITY OF	230067	0529	D

Notice to User: The **Map Number** shown below should be used when placing map orders; the **Community Number** shown above should be used on insurance applications for the subject community.

MAP NUMBER
23011C0529D

EFFECTIVE DATE
JUNE 16, 2011

Federal Emergency Management Agency

This is an official copy of a portion of the above referenced flood map. It was extracted using F-MIT On-Line. This map does not reflect changes or amendments which may have been made subsequent to the date on the title block. For the latest product information about National Flood Insurance Program flood maps check the FEMA Flood Map Store at www.msc.fema.gov

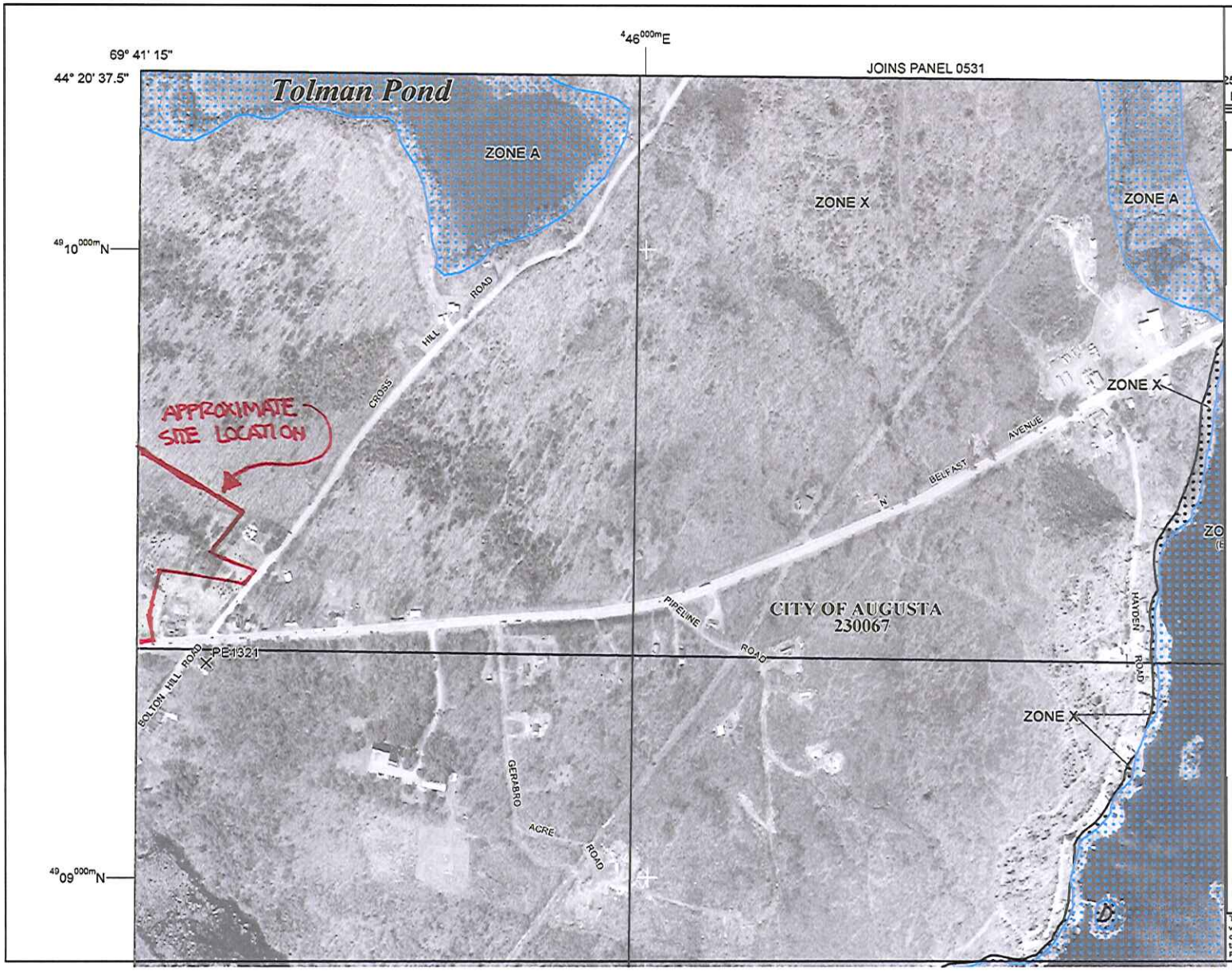

MAP SCALE 1" = 500'

250 0 500 1000 FEET

METERS

NFIP

NATIONAL FLOOD INSURANCE PROGRAM

PANEL 0533D

FIRM

FLOOD INSURANCE RATE MAP

KENNEBEC COUNTY, MAINE

(ALL JURISDICTIONS)

PANEL 533 OF 775

(SEE MAP INDEX FOR FIRM PANEL LAYOUT)

CONTAINS:

COMMUNITY	NUMBER	PANEL	SUFFIX
AUGUSTA, CITY OF	230067	0533	D

Notice to User: The **Map Number** shown below should be used when placing map orders; the **Community Number** shown above should be used on insurance applications for the subject community.

MAP NUMBER
23011C0533D

EFFECTIVE DATE
JUNE 16, 2011

Federal Emergency Management Agency

This is an official copy of a portion of the above referenced flood map. It was extracted using F-MIT On-Line. This map does not reflect changes or amendments which may have been made subsequent to the date on the title block. For the latest product information about National Flood Insurance Program flood maps check the FEMA Flood Map Store at www.msc.fema.gov

Storm Water Management Report
Augusta Kingdom Hall of Jehovah's Witnesses

April 10, 2014

STATE OF MAINE
ALINA L. WATT
No. 11164
LICENSED PROFESSIONAL ENGINEER

Stormwater Narrative

The Augusta Kingdom Hall project is the construction of a new place of worship with a paved access drive and paved parking. The main building is 4,652 SF including an attached one-bedroom apartment, there will also be a 480 SF detached storage shed/garage. The total impervious area of the project is approximately 42,886 SF.

The topography for this project was obtained from aerial photography and has been field verified as generally correct for the site. The stormwater management system as shown on the plans will work in effectively detaining stormwater runoff so that there is no net increase between Pre and Post development.

The site is currently undeveloped and is primarily forested. The parcel has frontage on RTE 3 and Cross Hill Road, and the applicant is proposing their access drive off of Cross Hill Road. No open water exists on the site and it is situated in a rural area. Stormwater discharge from the project flows over the ground through culverts, ditches and existing drainage swales. There will be no downstream effect on these drainage swales.

The intent of this drainage study is to determine stormwater quantity measures for the proposed site. The methodology, results and proposed plan for managing the stormwater is described in this section.

Methodology

Criteria used to establish a viable stormwater management plan include:

1. Minimize erosion and control sedimentation while mitigating impact of increased stormwater flows from new impervious and developed areas.
2. Provide a level of detention of stormwater run-off to lessen downstream impacts for the 2 and 25-year return period storms.

Peak runoff flow rates and reservoir routing were determined using the TR-20 based HYDROCAD Stormwater Modeling System, Version 8.5 by HydroCAD Software Solutions, LLC.

The stormwater model is based mainly on the hydrology techniques developed by the Soil Conservation Service (now known as the Natural Resources Conservation Service) and combined with other hydrology and hydraulics calculations. Peak runoff flow rates and volumes were obtained by implementing weighted runoff curve numbers (RCN's) determined by ground cover, soil types, and times of concentration (Tc's) determined by the distance and velocity of drainage patterns. The RCN's and Tc's are then incorporated with the anticipated rainfall amount during a particular rainfall event to produce a unit hydrograph. Kennebec County (where the city of Augusta is located) experiences Type III storms as defined by SCS. The 24-hour rainfall amounts evaluated and their recurrence intervals are summarized in the following table:

Kennebec County Rainfall Data Used for Stormwater Analysis:

Recurrence Interval (yrs.)	Rainfall Depth (in.)
2	3.0
10	4.4
25	5.1

Soil data for the site was taken from USDA Natural Resource Conservation Service Web Soil Survey. See soils information attached.

Development Location

The site is located on the corner of State Route 3 and Cross Hill Road. The site generally discharges in a westerly direction in the general direction of the Kennebec River.

Surface Water on or Abutting the Site

Surface water on the site consists of a man made farm pond which will be utilized to detain stormwater runoff from the site. There are no streams or brooks defined on the property.

Downstream Lakes and Ponds

Runoff from the site discharges to drainage areas and streams located approximately 1 mile west of the site. These drainage areas eventually lead to the Kennebec River which is approximately 1.25 miles west of the site.

General Topography

The existing gravel road at the western border of the property has slopes ranging from 6% to 12%. The rest of the property, except for the access road, is undisturbed forest and meadow with lots of knolls and swales. Slopes across these areas vary from about 1% to 35%.

Flooding

According to FEMA Flood Insurance Map, no portion of the site falls within a flood zone. See attached FEMA maps.

Alterations to Natural Drainage Ways

Runoff generally drains from east to west across the site. The portion of the site to be developed drains to the western border of the property where it will be detained before being discharged and eventually reaching the Kennebec River.

Alterations to Land Cover

The area of proposed development is wooded and undeveloped. Some of this wooded cover will be cleared to facilitate the new project. The land cover will be altered by the placement of approximately 0.98 acres of impervious surface from construction of a new building with an associated access road and parking. Areas to be cleared for grading, except for the building, drive and parking, will be returned to a grassed condition following construction.

Modeling Assumptions

The following assumption was used to determine runoff curve numbers, times of concentration and travel times from pre-development and post-development models:

- All pre-development areas within the project footprint were assumed as impervious roof or parking, gravel drives, wooded, or grassed.
- Time of concentration for sheet flow was considered shorter in densely wooded areas.
- All flows, except culverts, were assumed to be either sheet, shallow concentrated or channelized.

Water Quantity Control

All proposed flows follow the same general patterns as pre-development conditions, with flows leaving the site in the same locations. Peak flow rates are compared at the corresponding outflow points between pre- and post-development conditions. Combined peak flow rates have either decreased or remained the same despite the added impervious area due to the construction of two small detention ponds (dry ponds). The ponds have been sized to provide adequate detention, slow the release of storm runoff waters from the site, and protect flow paths from frequent erosive flows. Stormwater discharge from the project flows over the ground through a culvert, ditches, and existing drainage and eventually into the Kennebec River.

Water Quality Treatment

Quality standards were not required for this site as the amount of impervious area will be under one acre.

Development Impacts

Based on field observations and modeling there will be no adverse impacts on downstream properties or flood control structures.

Pre-Development Drainage Plan

Refer to the attached "Predevelopment Stormwater Plan" sheet which includes the following:

- Scale and contours
- Plan elements
- Land cover types and boundaries
- Soil group boundaries
- Stormwater quantity sub watershed boundaries
- Stormwater quality sub watershed boundaries
- Watershed analysis points
- Hydrologic flow lines
- Runoff storage areas
- Existing parking areas and access drives
- Existing facilities
- Existing drainage ways
- Wetlands
- Benchmarks

Post-Development Drainage Plan

Refer to attached "Post-development Stormwater Plan" which includes the following:

- Scale and contours
- Plan elements
- Land cover types and boundaries
- Soil group boundaries
- Stormwater quantity sub watershed boundaries
- Stormwater quality sub watershed boundaries
- Watershed analysis points
- Hydrologic flow lines
- Runoff storage areas
- Parking areas and access drives
- Facilities
- Drainage systems
- Natural and man-made drainage ways
- Wetlands
- Benchmarks

Stormwater Quantity

The analysis uses three discharge points which coincide for pre- and post-development conditions. All flows are analyzed for the 2 and 25-year storm events. The following table shows the changes in peak flow rates in cubic feet per second (cfs) between pre and post development conditions:

Peak Runoff Rates at Discharge Points for Various Rainfall Events:

Model Node		2-yr (cfs)	25-yr (cfs)
Link #1:	Pre-Devel.	1.25	3.39
	Post-Devel.	1.08	1.76
Link #2:	Pre-Devel.	1.51	4.08
	Post-Devel.	1.48	2.54
Link #3:	Pre-Devel.	1.71	4.64
	Post-Devel.	1.67	4.53

As the above table documents, peak flows from the site have been decreased despite the added impervious area as the water will be slowed through the small detention ponds. The flows from storm events are run through outlets sized to limit flow rates. Protected emergency spillways have also been provided for large storm events.

Calculations for the pre and post development stormwater model are attached to this section as well as site plans (See Pre- and Post-Development sheets) showing the sub catchments, ponds and reaches.

Stormwater Detention and Retention Submissions

The attached Hydro-Cad calculations show that the peak flows from the site are mitigated by routing flows through the proposed dry ponds.

Stormwater Quality Treatment

Quality standards were not required for this site as the amount of impervious area will be under one acre.

Easements

No easements for storm water are being requested as flows will not be increased and flow patterns are the same as pre-development conditions.

Conclusions

Based on the results of our analysis and modeling it can be concluded that there will be no significant impact on downstream structures or properties. Peak discharges from developed areas are being detained for storm events such that the peak rates of flow from the site for post-development conditions do not exceed pre-development conditions.

Hydrologic Soil Group—Kennebec County, Maine

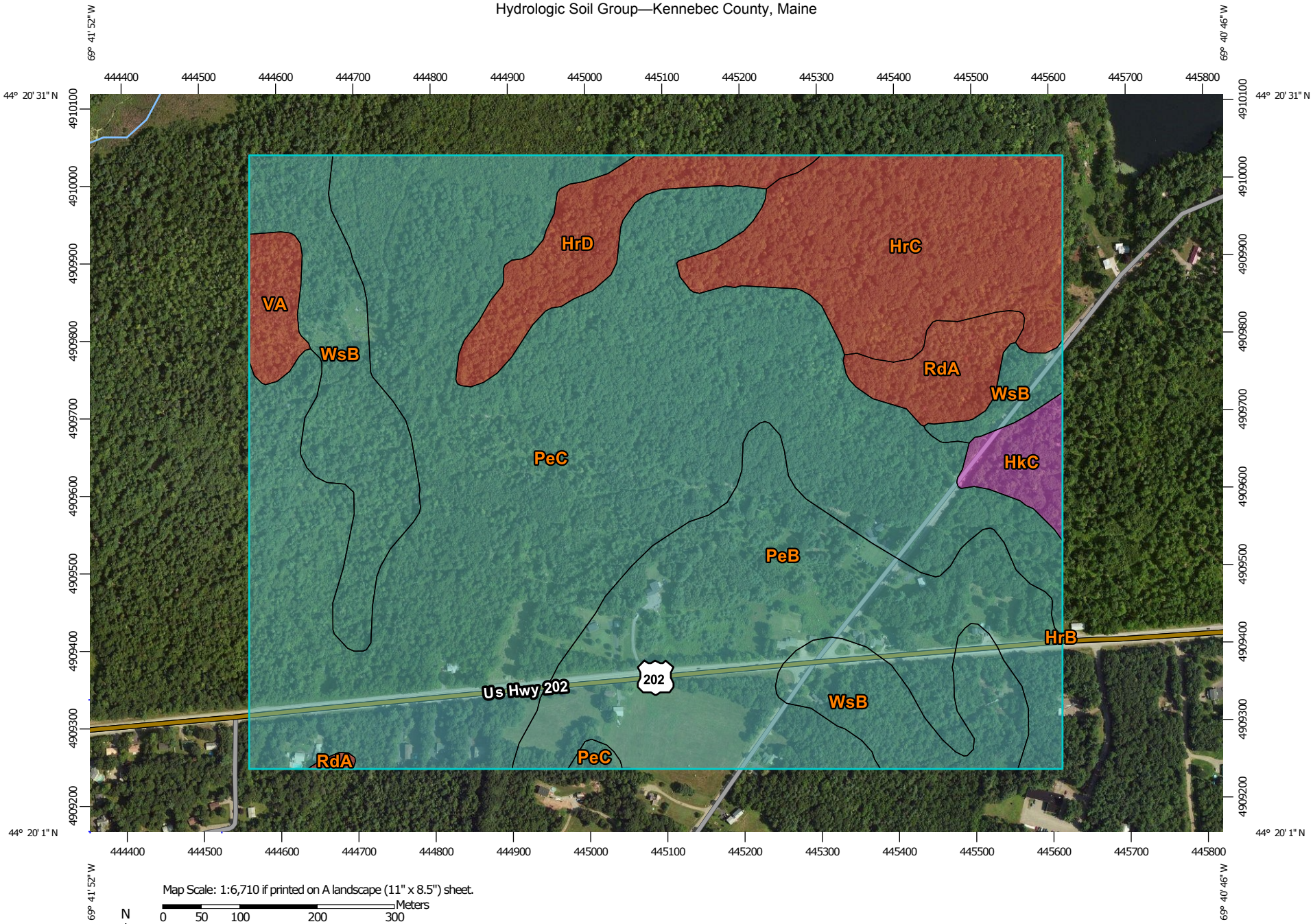

Map Scale: 1:6,710 if printed on A landscape (11" x 8.5") sheet.

N

Meters: 0 50 100 200 300

Feet: 0 300 600 1200 1800

Map projection: Web Mercator Corner coordinates: WGS84 Edge tics: UTM Zone 19N WGS84

MAP LEGEND

Area of Interest (AOI)

Area of Interest (AOI)

Soils

Soil Rating Polygons

- A
- A/D
- B
- B/D
- C
- C/D
- D
- Not rated or not available

Soil Rating Lines

- A
- A/D
- B
- B/D
- C
- C/D
- D
- Not rated or not available

Soil Rating Points

- A
- A/D
- B
- B/D
- C
- C/D
- D
- Not rated or not available

Water Features

Streams and Canals

Transportation

- Rails
- Interstate Highways
- US Routes
- Major Roads
- Local Roads

Background

Aerial Photography

MAP INFORMATION

The soil surveys that comprise your AOI were mapped at 1:20,000.

Warning: Soil Map may not be valid at this scale.

Enlargement of maps beyond the scale of mapping can cause misunderstanding of the detail of mapping and accuracy of soil line placement. The maps do not show the small areas of contrasting soils that could have been shown at a more detailed scale.

Please rely on the bar scale on each map sheet for map measurements.

Source of Map: Natural Resources Conservation Service
Web Soil Survey URL: http://websoilsurvey.nrcs.usda.gov
Coordinate System: Web Mercator (EPSG:3857)

Maps from the Web Soil Survey are based on the Web Mercator projection, which preserves direction and shape but distorts distance and area. A projection that preserves area, such as the Albers equal-area conic projection, should be used if more accurate calculations of distance or area are required.

This product is generated from the USDA-NRCS certified data as of the version date(s) listed below.

Soil Survey Area: Kennebec County, Maine
Survey Area Data: Version 12, Dec 5, 2013

Soil map units are labeled (as space allows) for map scales 1:50,000 or larger.

Date(s) aerial images were photographed: Jul 17, 2010—May 1, 2011

The orthophoto or other base map on which the soil lines were compiled and digitized probably differs from the background imagery displayed on these maps. As a result, some minor shifting of map unit boundaries may be evident.

Hydrologic Soil Group

Hydrologic Soil Group— Summary by Map Unit — Kennebec County, Maine (ME011)				
Map unit symbol	**Map unit name**	**Rating**	**Acres in AOI**	**Percent of AOI**
HkC	Hinckley gravelly sandy loam, 8 to 15 percent slopes	A	3.4	1.6%
HrB	Hollis fine sandy loam, 3 to 8 percent slopes	D	0.0	0.0%
HrC	Hollis fine sandy loam, 8 to 15 percent slopes	D	22.7	10.9%
HrD	Hollis fine sandy loam, 15 to 25 percent slopes	D	8.5	4.1%
PeB	Paxton-Charlton very stony fine sandy loams, 3 to 8 percent slopes	C	39.4	19.0%
PeC	Paxton-Charlton very stony fine sandy loams, 8 to 15 percent slopes	C	100.5	48.6%
RdA	Ridgebury very stony fine sandy loam	D	5.0	2.4%
VA	Vassalboro fibrous peat	D	3.0	1.5%
WsB	Woodbridge very stony fine sandy loam, 3 to 8 percent slopes	C	24.5	11.8%
Totals for Area of Interest			**206.9**	**100.0%**

Description

Hydrologic soil groups are based on estimates of runoff potential. Soils are assigned to one of four groups according to the rate of water infiltration when the soils are not protected by vegetation, are thoroughly wet, and receive precipitation from long-duration storms.

The soils in the United States are assigned to four groups (A, B, C, and D) and three dual classes (A/D, B/D, and C/D). The groups are defined as follows:

Group A. Soils having a high infiltration rate (low runoff potential) when thoroughly wet. These consist mainly of deep, well drained to excessively drained sands or gravelly sands. These soils have a high rate of water transmission.

Group B. Soils having a moderate infiltration rate when thoroughly wet. These consist chiefly of moderately deep or deep, moderately well drained or well drained soils that have moderately fine texture to moderately coarse texture. These soils have a moderate rate of water transmission.

Group C. Soils having a slow infiltration rate when thoroughly wet. These consist chiefly of soils having a layer that impedes the downward movement of water or soils of moderately fine texture or fine texture. These soils have a slow rate of water transmission.

Group D. Soils having a very slow infiltration rate (high runoff potential) when thoroughly wet. These consist chiefly of clays that have a high shrink-swell potential, soils that have a high water table, soils that have a claypan or clay layer at or near the surface, and soils that are shallow over nearly impervious material. These soils have a very slow rate of water transmission.

If a soil is assigned to a dual hydrologic group (A/D, B/D, or C/D), the first letter is for drained areas and the second is for undrained areas. Only the soils that in their natural condition are in group D are assigned to dual classes.

Rating Options

Aggregation Method: Dominant Condition

Component Percent Cutoff: *None Specified*

Tie-break Rule: Higher

Example of a typical sign for a Kingdom Hall. Sign Permit will be obtained after Planning Board approval.

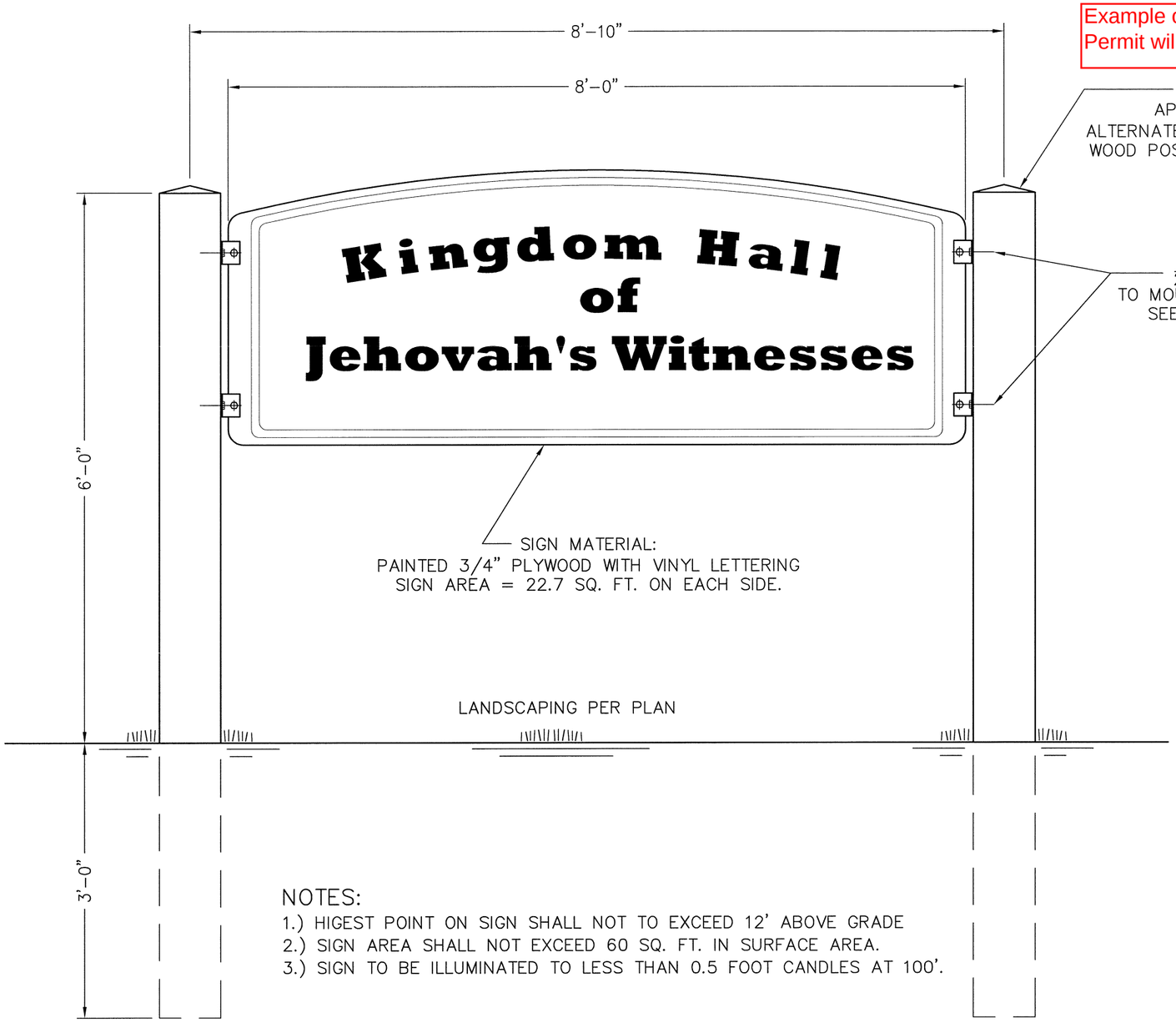

NOTES:
1.) HIGEST POINT ON SIGN SHALL NOT TO EXCEED 12' ABOVE GRADE
2.) SIGN AREA SHALL NOT EXCEED 60 SQ. FT. IN SURFACE AREA.
3.) SIGN TO BE ILLUMINATED TO LESS THAN 0.5 FOOT CANDLES AT 100'.

1 / A12.1 SIGN ELEVATION
SCALE: 3/4" = 1'-0"

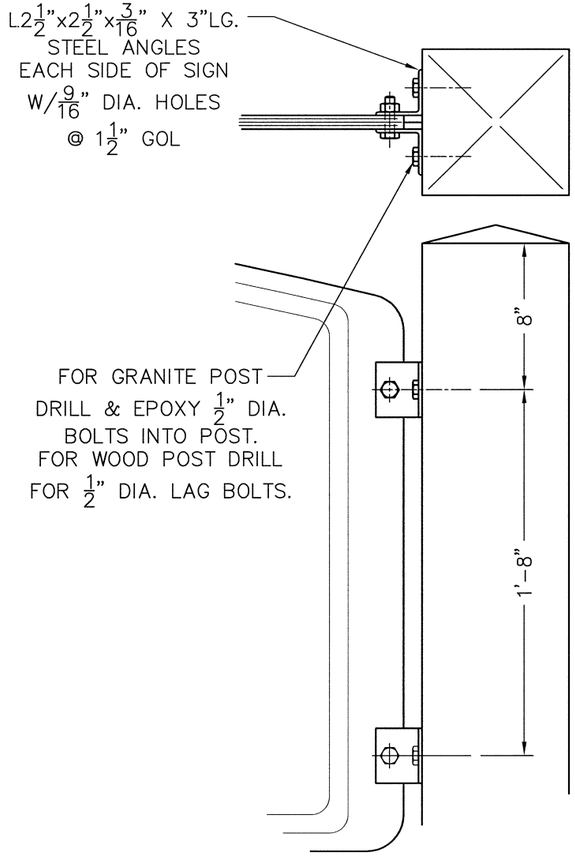

2 / A12.1 SIGN DETAIL
SCALE: 1 1/2"= 1'-0"

FOR AGENCY REVIEW
NOT FOR CONSTRUCTION

NO	DATE	REVISION	BY
1	5-15-12	PRELIMINARY	WEM

SHEET TITLE: SIGN PLAN, ELEVATION & DETAILS

PROJECT TITLE: SANFORD, ME – KINGDOM HALL
DESIGN 05
UNITED STATES OF AMERICA

DWN BY: JMH CKD BY: JMH
SCALE: 1"=1'-0"
DATE: 5-15-2012
CAD #:05A121_R1.dwg
SHEET No. A12.1

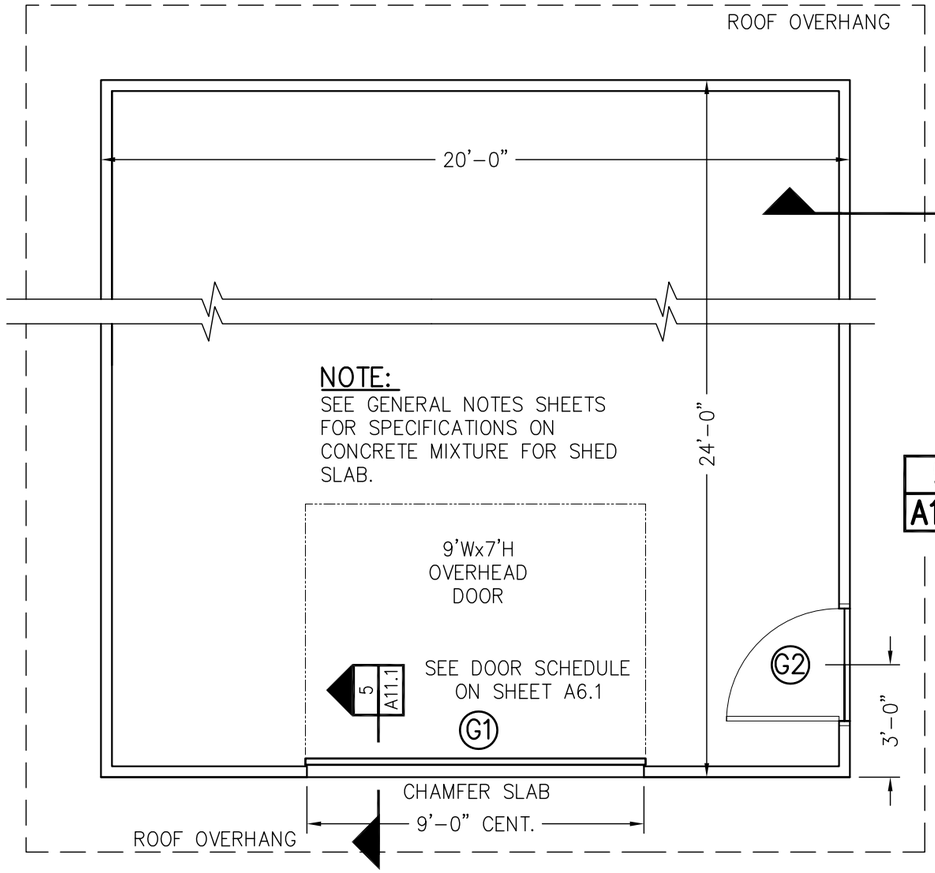

1 / A11.1 PLAN VIEW – STORAGE SHED
SCALE: 1/4" = 1'-0"

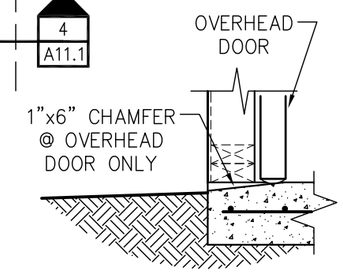

5 / A11.1 CHAMFER SECTION
SCALE: 1" = 1'-0"

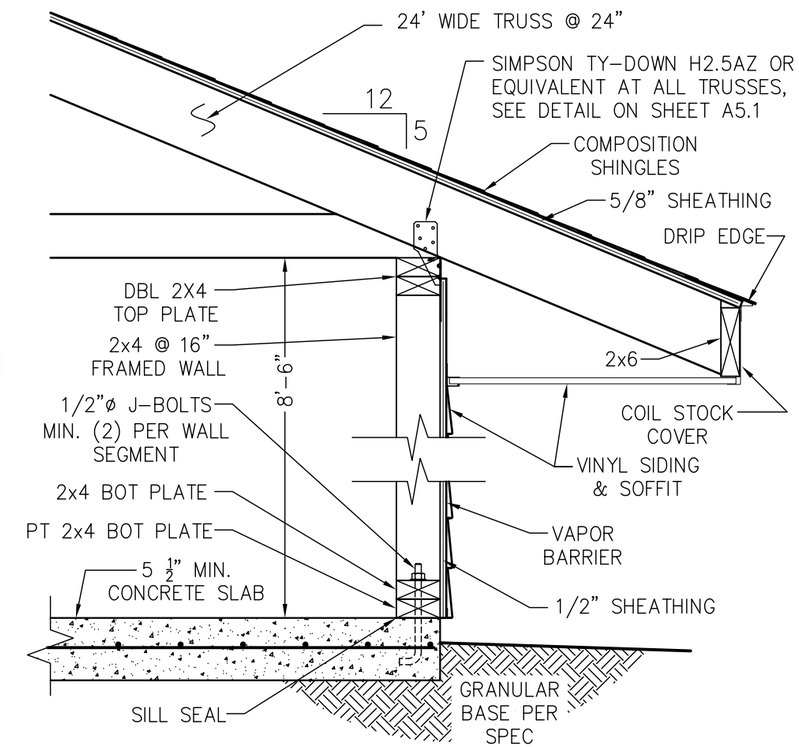

4 / A11.1 TYP. WALL SECTION
SCALE: 1" = 1'-0"

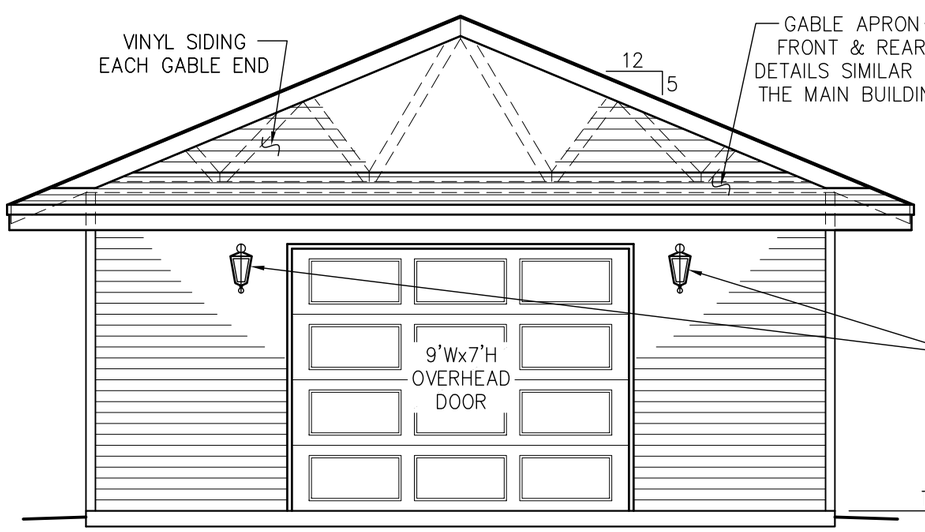

2 / A11.1 EAST (FRONT) ELEVATION
SCALE: 1/4" = 1'-0"

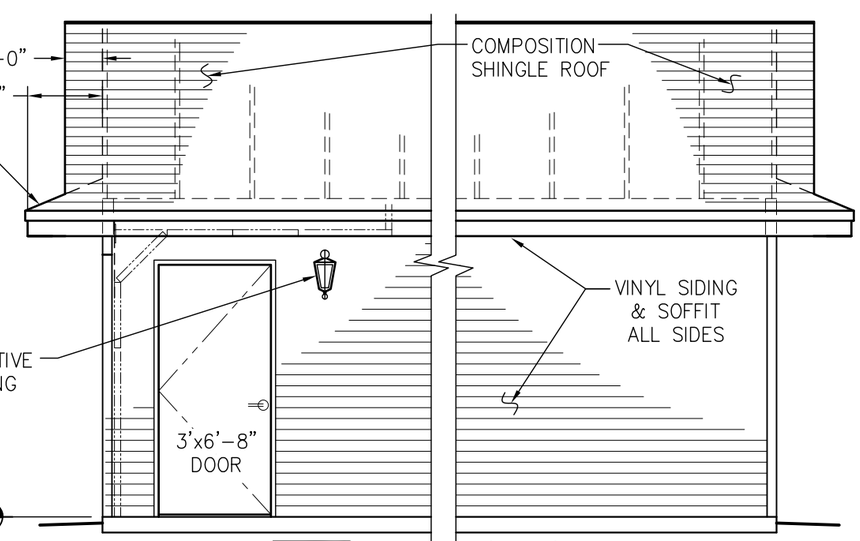

3 / A11.1 NORTH (SIDE) ELEVATION
SCALE: 1/4" = 1'-0"

NO	DATE	REVISION	BY
1	12-15-13	PRELIMINARY	JMH
2			
3			
4			
5			
6			

SHEET TITLE
STORAGE SHED
PLAN, ELEVATIONS & DETAILS

PROJECT TITLE
AUGUSAT, ME – KINGDOM HALL
DESIGN 02 w/APARTMENT
UNITED STATES OF AMERICA

DWN BY: JMH CKD BY: JMH
SCALE: 1/4"=1'-0"
DATE: 12-15-2013
CAD #:02A110_R1.dwg
SHEET No.
A11.1

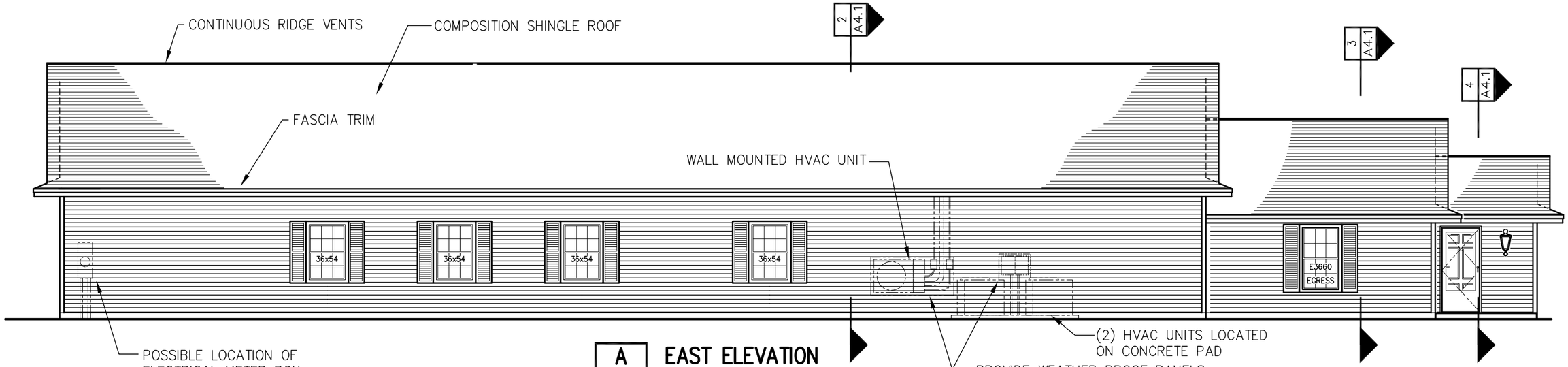

A / A3.2 EAST ELEVATION
SCALE: 1/8" = 1'-0"

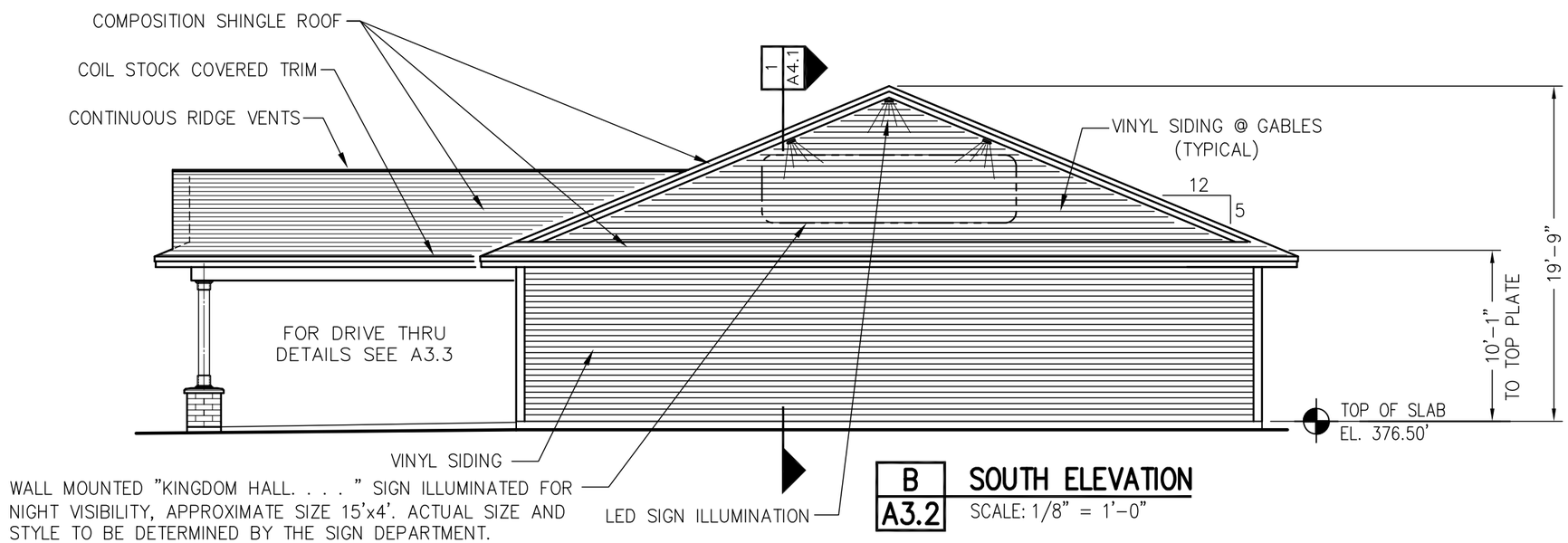

B / A3.2 SOUTH ELEVATION
SCALE: 1/8" = 1'-0"

NO	DATE	REVISION	BY
1	12-15-13	PRELIMINARY	JMH
2			
3			
4			
5			
6			

SHEET TITLE
EAST & SOUTH ELEVATION

PROJECT TITLE
AUGUSTA, ME – KINGDOM HALL
DESIGN 02 w/ APARTMENT
UNITED STATES OF AMERICA

DWN BY: JMH CKD BY: JMH
SCALE: 1/8"=1'-0"
DATE: 12-15-2013
CAD #: 02A300_R1.DWG
SHEET No.
A3.2

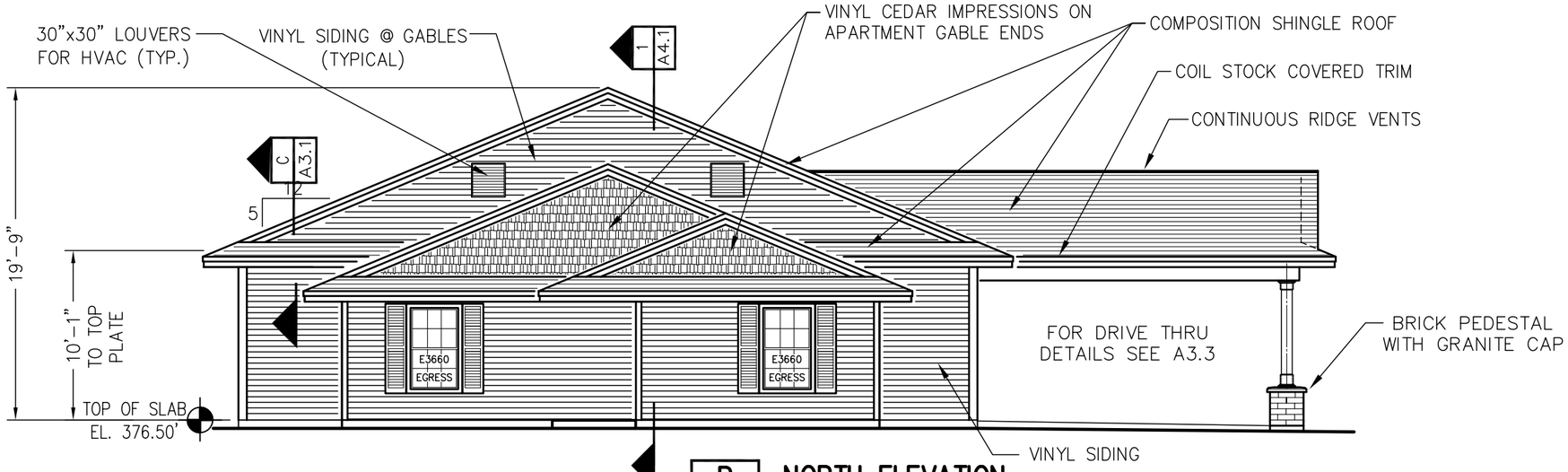

B / A3.1 NORTH ELEVATION
SCALE: 1/8" = 1'-0"

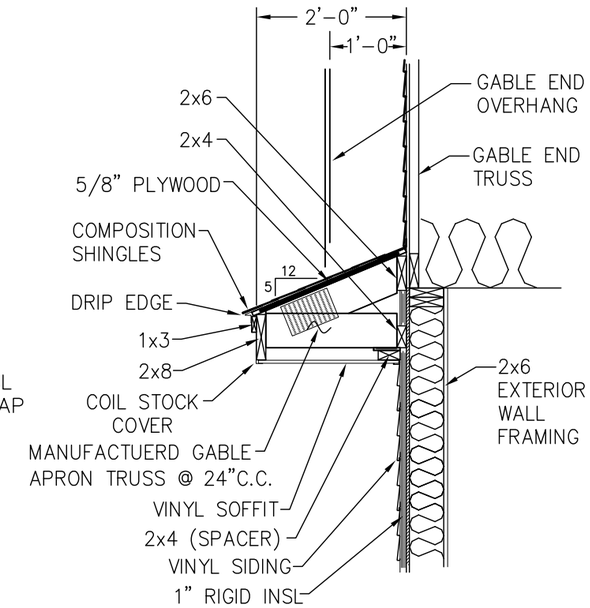

C / A3.1 GABLE APRON DETAIL
SCALE: 1/2" = 1'-0"

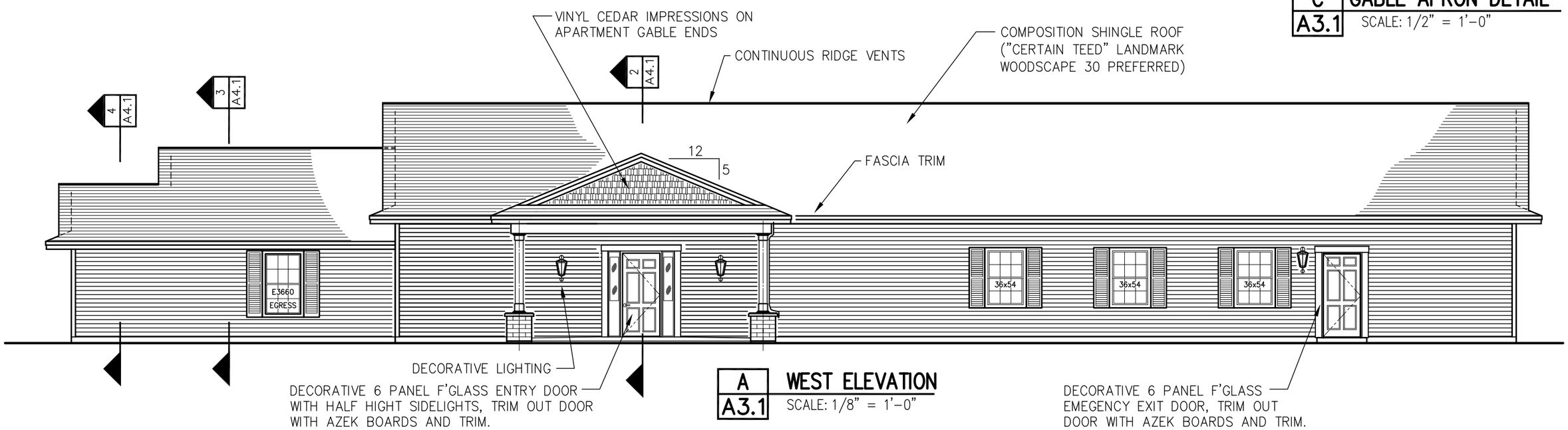

A / A3.1 WEST ELEVATION
SCALE: 1/8" = 1'-0"

NO	DATE	REVISION	BY
1	12-15-13	PRELIMINARY	JMH
2			
3			
4			
5			
6			

SHEET TITLE
NORTH & WEST ELEVATION

PROJECT TITLE
AUGUSTA, ME – KINGDOM HALL
DESIGN 02 w/APARTMENT
UNITED STATES OF AMERICA

DWN BY: JMH CKD BY: JMH
SCALE: 1/8"=1'-0"
DATE: 12-15-2013
CAD #: 02A300_R1.DWG
SHEET No.
A3.1