M40 L16

SUBSURFACE WASTEWATER DISPOSAL SYSTEM APPLICATION

Department of Human Services
Division of Health Engineering
(207)287-5672 FAX (207)287-4172

AUGUSTA 3730 TOWN COPY

Date Permit Issued: 7/7/97 $ 160.00 FEE ☐ If Double Fee Charged

L.P.I. # 850

Local Plumbing Inspector Signature

PROPERTY LOCATION

Town or Plantation	AUGUSTA
Street Division Lot #	RIVERSIDE DRIVE

PROPERTY OWNERS NAME

Last: GORDON First: BRIAN

Mailing Address of Owner	CAPITOL CITY TIRE CO 258 RIVERSIDE DRIVE AUGUSTA, ME 04330
Daytime Tel. #	622-3793

Municipal Tax Map # 40 Page # 16

Owner Statement

I state that the information submitted is correct to the best of my knowledge and understand that any falsification is reason for the Department and/or Local Plumbing Inspector to deny a Permit.

Brian J Gordon 6/26/97

Signature of Owner/Applicant Date

Caution: Inspection Required

I have inspected the installation authorized above and found it to be in compliance with the Subsurface Wastewater Disposal Rules Application

Rutt inspection 7/22/97 okay.

Local Plumbing Inspector Signature Date Approved

PERMIT INFORMATION

THIS APPLICATION IS FOR:

1. ■ First Time System
2. ☐ Multi-User System
3. ☐ Replacement System
4. ☐ Expanded System
   a. ☐ One-time exempted
   b. ☐ Non-exempted
5. ☐ Experimental System
6. ☐ Seasonal Conversion

THIS APPLICATION REQUIRES:

1. ■ No Rule Variance
2. ☐ First Time System Variance (Municipal)
3. ☐ First Time System Variance (State)
4. ☐ Replacement System Variance
   a. ☐ Local Plumbing Inspector approval
   b. ☐ State & Local Plumbing Inspector approval
5. ☐ Minimum Lot Size Variance
6. ☐ Seasonal Conversion Variance

DISPOSAL SYSTEM COMPONENT(S):

1. ■ Non-Engineered System
2. ☐ Primitive System
3. ☐ Alternative Toilet
   specify
4. ☐ Non-Engineered Treatment Tank
5. ☐ Holding Tank ____ Gallons
6. ☐ Non- Engineered Disposal Area
7. ☐ Separated Laundry System
8. ☐ Engineered System (+2000 gpd)
9. ☐ Engineered Treatment Tank (only)
10. ☐ Engineered Disposal Area (only)

SIZE OF PROPERTY

11 ACRES

SHORELAND ZONING

☐ Yes ■ No

DISPOSAL SYSTEM TO SERVE:

1. ■ Single Family Dwelling Unit
2. ☐ Multiple Family Dwelling Unit
   Number of Units ____
3. ☐ OTHER ____ SPECIFY

TYPE OF WATER SUPPLY

CITY WATER

DESIGN DETAILS (SYSTEM LAYOUT SHOWN ON PAGE 3)

TREATMENT TANK

1. ■ Concrete
   ■ Regular
   ☐ Low Profile
2. ☐ Plastic

SIZE: 1000 Gallons

DISPOSAL AREA TYPE/SIZE

1. ■ Stone Bed 1100 Sq. Ft.
2. ☐ Proprietary Device ____ Sq. Ft.
   ☐ Clustered ☐ Linear
   ☐ Regular ☐ H-20
3. ☐ Trench ____ Lin. Ft.
4. ☐ Other ____

GARBAGE DISPOSAL UNIT

1. ■ No
2. ☐ Yes
   ☐ Multi-compartment Tank
   ☐ Tank in Series
   ☐ Increase in tank capacity
   ☐ Filter on Tank Outlet RECOMMENDED

CRITERIA USED FOR DESIGN FLOW (Show Calculations)

3 BEDROOM

DESIGN FLOW: 270 (Gallons/Day)

PROFILE & DESIGN CLASS

PROFILE	DESIGN
8	C

DEPTH TO MOST LIMITING FACTOR 18 "

DISPOSAL AREA SIZING

1. ☐ Small 2.0
2. ☐ Medium 2.60
3. ☐ Medium-Large 3.30
4. ■ Large 4.10
5. ☐ Extra-Large 5.00

PUMPING

1. ■ Not Required
2. ☐ May Be Required
3. ☐ Required

DOSE ____ Gallons

SITE EVALUATOR'S STATEMENT

On 6 / 14 / 97 (date) I completed a site evaluation on this property and state that the data reported is accurate and that the proposed system is in compliance with the Subsurface Wastewater Disposal Rules.

William P Brown 188 6/15/97

Site Evaluator Signature SE# Date

WILLIAM P BROWN 293-2110

Print Name Telephone

SUBSURFACE WASTEWATER DISPOSAL SYSTEM APPLICATION

Division of Health Engineering

Town, City, Plantation	Street, Road, Subdivision	Owners Name
AUGUSTA	RIVERSIDE DRIVE	BRIAN GORDON

SITE PLAN

Scale 1" = 200 Ft.

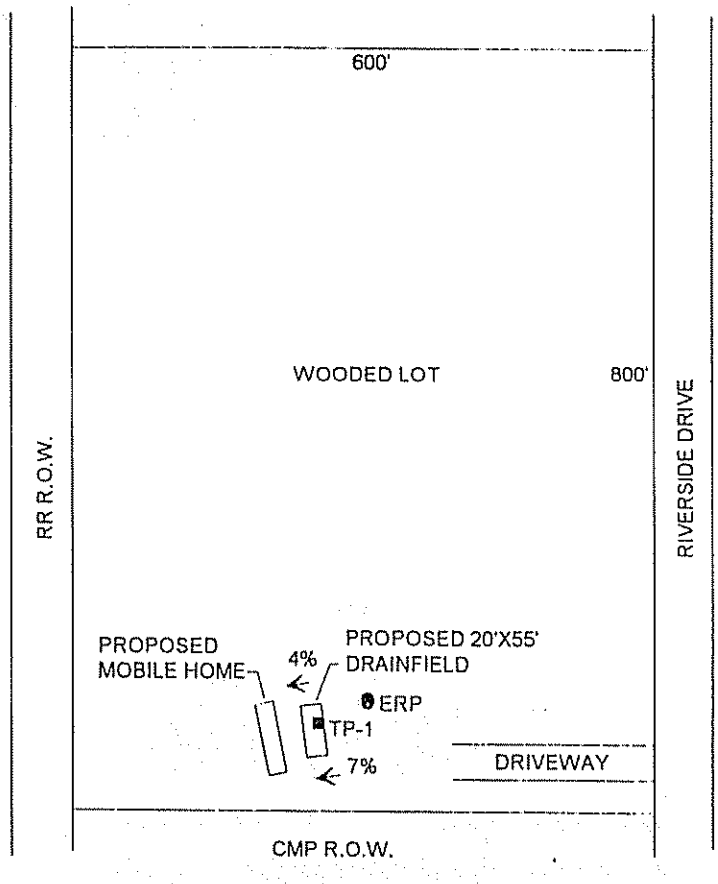

NORTH

ERP TO TP-1 = 38'

SITE LOCATION PLAN (Attach Map from Maine Atlas for New System Variance)

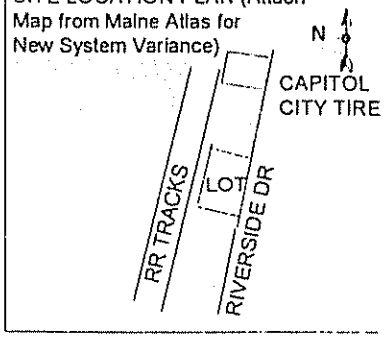

SOIL DESCRIPTION AND CLASSIFICATION (Location of Observation Holes Shown Above)

Observation Hole TP-1 ■ Test Pit ☐ Boring

1 " Depth of Organic Horizon Above Mineral Soil

DEPTH BELOW MINERAL SOIL SURFACE (Inches)

Depth	Texture	Consistancy	Color	Mottling
0–6	FINE SANDY LOAM	FRIABLE	DARK BROWN	
6–10			ORANGE BROWN	
10–15			YELLOW BROWN	NONE
15–20	SILT LOAM			COMMON
20–30		FIRM	OLIVE BRN	
30–50				

Soil Profile	Classification Condition	Slope	Limiting Factor	
8	C	4-7 %	18 "	■ Ground Water ☐ Restrictive Layer ☐ Bedrock

Observation Hole _____ ☐ Test Pit ☐ Boring

" Depth of Organic Horizon Above Mineral Soil

DEPTH BELOW MINERAL SOIL SURFACE (Inches)

Depth	Texture	Consistancy	Color	Mottling
0–50				

Soil Profile	Classification Condition	Slope	Limiting Factor	
		%	"	☐ Ground Water ☐ Restrictive Layer ☐ Bedrock

WILLIAM P BROWN *William P Brown* 188 6/15/97

Site Evaluator Signature SE # Date

HHE-200 Rev. 1/84

SUBSURFACE WASTEWATER DISPOSAL SYSTEM APPLICATION

Division of Health Engineering

Town, City, Plantation	Street, Road, Subdivision	Owners Name
AUGUSTA	RIVERSIDE DRIVE	BRIAN GORDON

SUBSURFACE WASTEWATER DISPOSAL PLAN

Scale 1" 20 Ft.

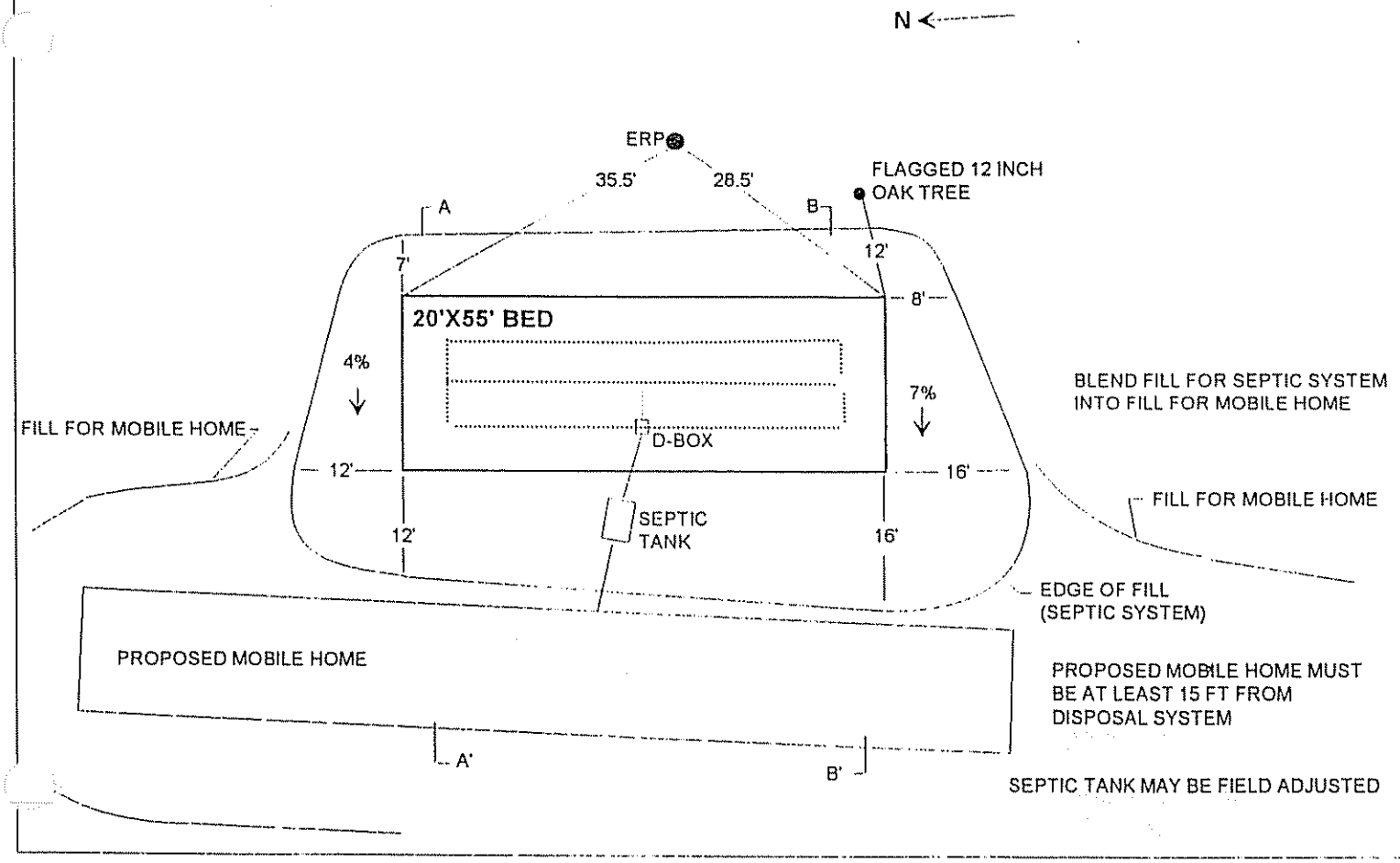

FILL REQUIREMENTS		CONSTRUCTION ELEVATIONS		ELEVATION REFERENCE POINT LOCATION & DESCRIPTION
Depth of Fill (Upslope)	18-24"	Reference Elevation is	00"	FLAGGED NAIL IN 8 INCH WHITE BIRCH, 2 FEET ABOVE GROUND
Depth of Fill (Downslope)	27-41"	Bottom of Disposal Area	-47"	
		Top of distribution Lines or Chambers	-36"	

DISPOSAL AREA CROSS SECTION

Scale:

Vertical: 1 inch = 5 Ft.
Horizontal: 1 inch = 10 Ft.

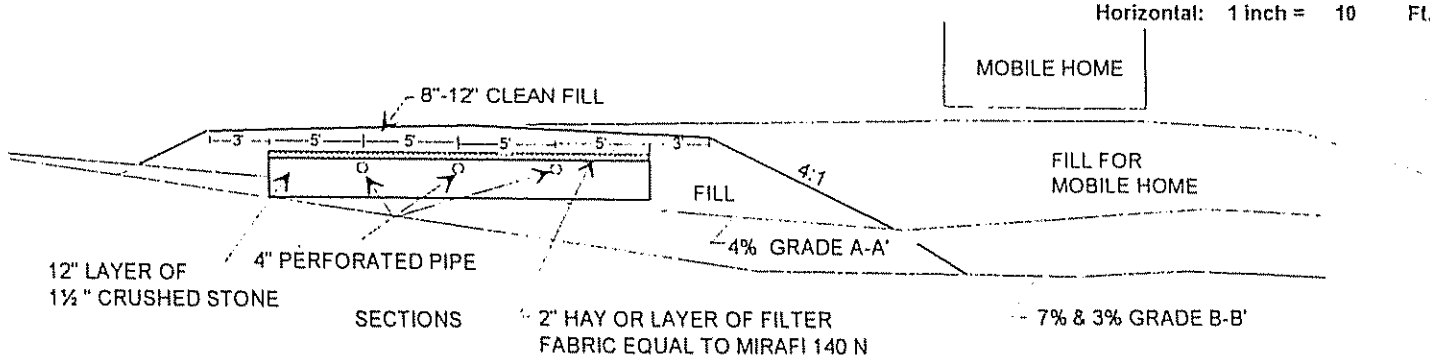

REMOVE STUMPS IN DISPOSAL AREA
SCARIFY ENTIRE FILL AREA
MIX 4 INCHES OF FILL MATERIAL WITH ORIGINAL SOIL TO FORM A TRANSITION ZONE (ACCORDING TO CHAPTER 12 OF THE PLUMBING CODE)
ALL FILL SHALL BE GRAVELLY COARSE SAND
BROWN FINISH GRADE FROM CENTER AT 3% OR
SLOPE ALL ONE WAY FROM MOBILE HOME
LOAM, SEED, MULCH DISTURBED AREAS

WILLIAM P BROWN *William P. Brown*	188	6/15/97	Page 3 of 3
Site Evaluator Signature	SE #	Date	HHE-200 Rev. 1/84