Rene Rodrigue

ORIGINAL To be sent to Division of Health Engineering, Augusta, Maine 04333 by the LPI

MAINE DEPARTMENT OF HUMAN SERVICES
APPLICATION FOR PRIVATE SEWAGE DISPOSAL PERMIT

This is NOT a permit; this form when completed must be presented to the Local Plumbing Inspector to obtain a permit.

Town	Street, Road, etc. / If on water body, give name	Plumbing Permit No.	Date of Plumbing Permit
Augusta	Westview St	22151M	5-5-77

Owner of property: Rene Rodrique
Owner's address:
Size of lot: 25000 ~~O~~ Sq. feet O Acres

Name & type of establishment if other than private home: _____ gpd
Is lot Zoned? O Yes ~~O~~ No
Type of Zoning: O Shoreland O Resource Protection

Name of applicant Owner's agent: Rene Rodrique
Applicant's address Street, Box, etc.: West River Road
Tel. No.: 26474
Town: Augusta
Zip Code: 04330
Applicant's signature / Owner's signature: x Paul Rodrigue
Date: 5-5-77

If you plan to use a previous subdivision approval in lieu of site investigation, please submit one of the following:
O Deed restriction re. private sewage disposal
O Copy of the subdivision's soils report
O Soils report from a State Agency

Subdivision name: Buena Vista Park
Lot No.: Plat 8 Lot 1 to 4

This application is for: ~~O~~ New System O Expanded System O Replacement System O Replacement of O Treatment Tank Only O Disposal Area Only

The water supply for this property is: O Dug well, depth _____, lining _____; ~~O~~ Drilled well, depth PROP, lining _____; Spring O depth _____, lining _____; Surface water O Body, O Course—O with disinfection, O without disinfection. O Public Utility, name _____

SITE INVESTIGATION

Show location of pits and/or borings on sketch on page 2, and refer to completed sample form and Chapter 4 of the Code, II.

	Soil Profile No. TP1 (~~O~~ Pit ☐ Boring)	Soil Profile No. (☐ Pit ☐ Boring)	Soil Profile No. (☐ Pit ☐ Boring)	Soil Profile No. (☐ Pit ☐ Boring)	Soil Profile No. (☐ Pit ☐ Boring)
Thickness and Description of each soil strata encountered	Organic strata Inches 1	Organic strata Inches	Organic strata Inches	Organic strata Inches	Organic strata Inches
	1st strata Reddish Brown Sandy Loam Inches 11 SM	1st strata Inches	1st strata Inches	1st strata Inches	1st strata Inches
	2nd strata Brown Sandy Loam Inches 14 SM	2nd strata Inches	2nd strata Inches	2nd strata Inches	2nd strata Inches
	3rd strata Inches	3rd strata Inches	3rd strata Inches	3rd strata Inches	3rd strata Inches
Depth from bottom of organic horizon to:	Total Depth of observation hole Inches 25	Total Depth of observation hole Inches	Total Depth of observation hole Inches	Total Depth of observation hole Inches	Total Depth of observation hole Inches
	Max. Ground water table—mottling ~~O~~ None Evident Inches	Max. Ground water table—mottling O None Evident Inches	Max. Ground water table—mottling O None Evident Inches	Max. Ground water table—mottling O None Evident Inches	Max. Ground water table—mottling O None Evident Inches
	Impervious layer, clay, etc. ~~O~~ None Evident Inches	Impervious layer, clay, etc. O None Evident Inches	Impervious layer, clay, etc. O None Evident Inches	Impervious layer, clay, etc. O None Evident Inches	Impervious layer, clay, etc. O None Evident Inches
	Bedrock Inches O None Evident Type of Bedrock 26	Bedrock Inches O None Evident Type of Bedrock	Bedrock Inches O None Evident Type of Bedrock	Bedrock Inches O None Evident Type of Bedrock	Bedrock Inches O None Evident Type of Bedrock
	Surface slope 10 %	Surface slope %	Surface slope %	Surface slope %	Surface slope %
	Soil Group & Condition per Table 9-1 of the Code, II: 2A	Soil Group & Condition per Table 9-1 of the Code, II:	Soil Group & Condition per Table 9-1 of the Code, II:	Soil Group & Condition per Table 9-1 of the Code, II:	Soil Group & Condition per Table 9-1 of the Code, II:

On 4-18-77 (date), a site investigation for this project was completed. I conducted this soil evaluation and certify that the results indicated above best represent the soil conditions found. I recommend the following type and size of private sewage disposal system. I also recommend the proposed private sewage disposal system layout and location shown on page 2.

Signature: Gerald C Pendlin
Health Engineering License No.: 79
Date signed: 4-18-77

PRIVATE SEWAGE DISPOSAL SYSTEM PROPOSED

Show location of system and details on sketches on page 2, and refer to completed sample form

SYSTEM:
~~O~~ COMBINED SYSTEM
O SEPARATED SYSTEM
If separated system—type of human waste dipsosal system to be used:
O Sealed Vault Privy
O Open Pit Privy
O Compost Toilet
O Incinerator Toilet
O Chemical Toile:
O Other, describe

See Chapter 9 of the Code, II.

TREATMENT TANK:
~~O~~ Septic Tank
~~O~~ Concrete
O Fiberglas
O Metal
Size in gallons: 1000

O Aerobic Tank
Manufacturer—
Model No.
Size in gallons

SUBSURFACE ABSORPTION AREA

Type:
O Trench System: Total trench length. N/A
O Bed System: Length 50 Width 20
O Chamber System: Number N/A ~~O~~ Single File O Cluster; O Type A O Type B
O Mound System: Length N/A Width at base
O Special System: Length N/A Width
WAIVER: N/A
O Required
O Not Required

SIZE:
O Very Small
O Small
O Medium
~~O~~ Medium Large
O Large
O Extra Large

SITE MODIFICATION
Fill will be: 23 in. uphill; 47 in. downhill

DETAILS
O A Distribution Box is required
Pumping is—O required, ~~O~~ is not required.
The Dose will be _____ gallons

DISTANCES
~~O~~ Yes O No: The proposed subsurface absorption area will be located at least 100 feet from any and all wells; springs; surface water bodies and courses (lake, pond, ocean, brook, stream, river); swamps; marshes; and bogs.
~~O~~ Yes O No: The proposed subsurface absorption area will be located at least 300 feet from any and all wells and springs producing 2000 gallons or more of water per day and any public water supplies.

PROPERTY / LOT LOCATION MAP

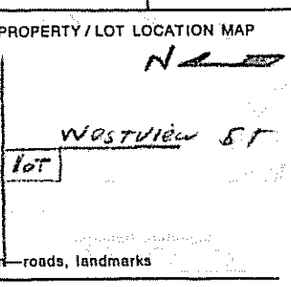

Location—roads, landmarks

FOR THE USE OF LPI ONLY

O Denial: Application is denied for following reasons; portions of the Code II are cited.
Form is incomplete (_____ pg.) as to O General Info, O Site Investigation, O System Proposed, O Site Plan, O Disposal System Plan, O Cross-Section, O Statement. See Section 2.3.
O Site Investigation indicates site is O totally unsuitable for disposal system; Sections 4.5 and 9.5, Table 9-1 Group 9 and 10. O Unsuitable for system proposed; Sections 4.3, 4.6, 9.5, Table 9-1.
O System Proposed does not conform to Code; See Sections 9. _____
O Site investigation indicates site modifications are necessary; See Sections O 4.3, O 4.4, O 4.6, O 8.7, O _____
~~O~~ Miscellaneous _____ See Section _____
~~O~~ Acceptance: Application for permit is approved O with condition specified, comply with Section _____ ~~O~~ without condition.
Signed LPI: Richard A. Baker Date 5-5-77

HHE - 200 1/77

APPLICATION FOR PRIVATE SEWAGE DISPOSAL PERMIT

(For systems disposing of less than 2000 gallons per day)

Town	Street, Road, etc. If on water body, give name	Owner of property
Augusta	Westview St	Rene Rodrique

Site Plan

Scale 1" = 100 Ft. or _____

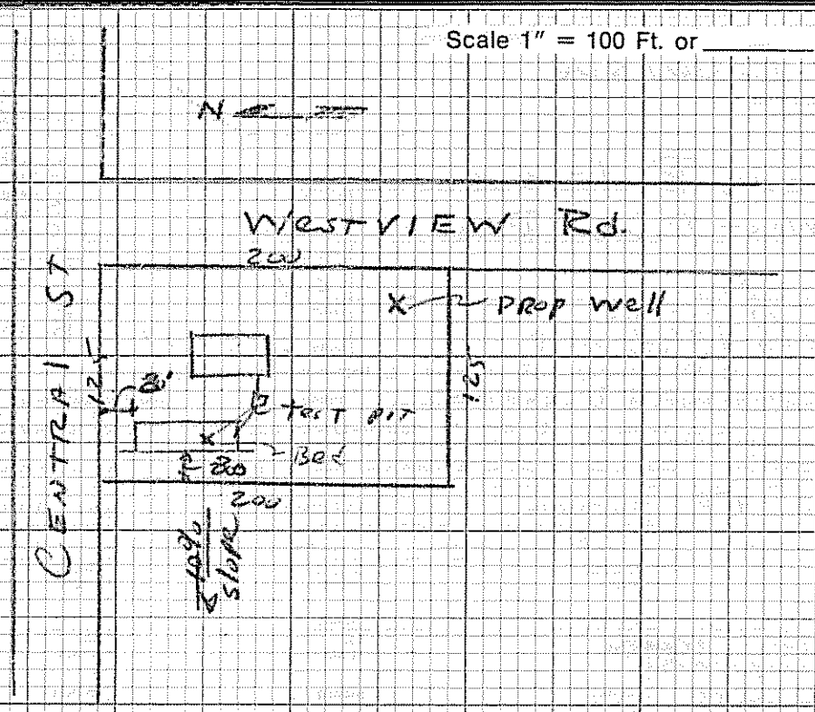

Private Sewage Disposal Plan

Scale 1" = 20' or _____

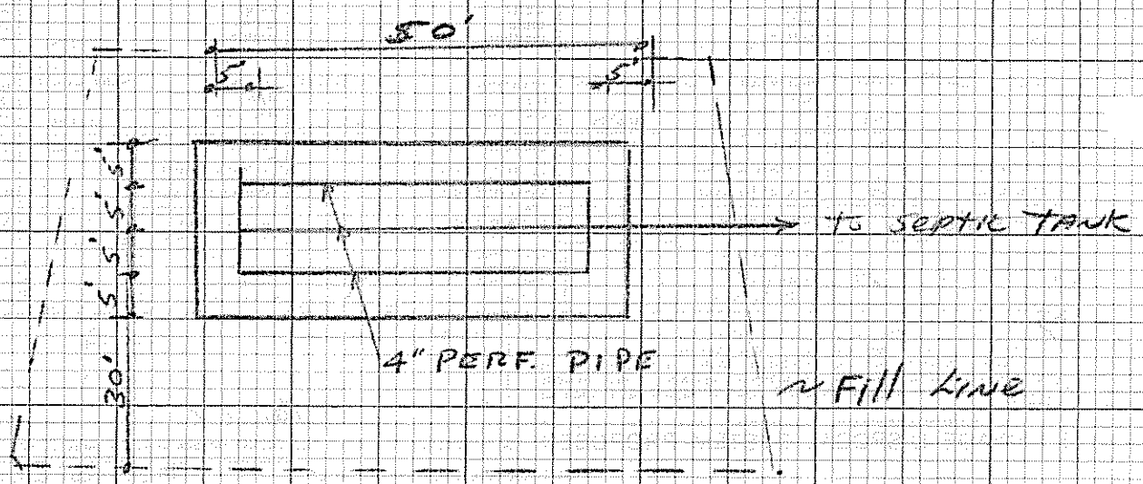

Subsurface Absorption Area Cross-section

Scale: Vertical — ~~1" = 5'~~ or 1" = 4'

Horizontal — ~~1" = 20'~~ or 1" = 10

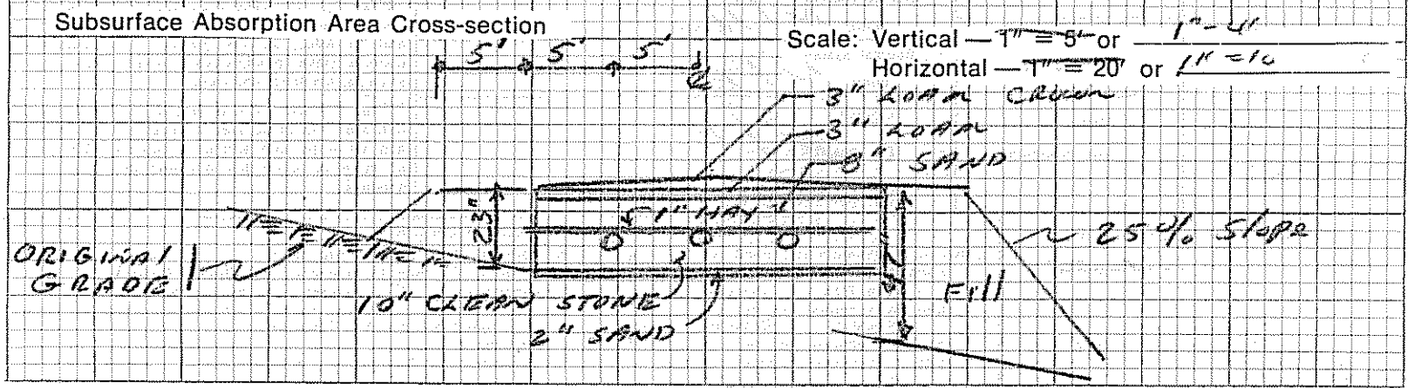

HHE - 200 1/77

Statement: (no permit may be issued unless signed)

I certify that all the information submitted to be true and correct; and I understand that issuance of a permit is based upon the information and plans submitted by the applicant. I also understand that any falsification of this application is reason to deny a permit to install a private sewage disposal system and that the permit is valid a six (6) month period from the date of permit issuance. I understand that no guarantee is intended or implied son of any advice or approval given by the Administrative Authority or its agent.

Signature Required

Date: 5-3-78

Apr