ORIGINAL To be sent to Division of Health Engineering, Augusta, Maine 04333 by the LPI

Soucie, Richard

MAINE DEPARTMENT OF HEALTH AND WELFARE APPLICATION FOR PRIVATE SEWAGE DISPOSAL PERMIT	(For systems disposing of less than 2000 gallons per day)	This is NOT a permit; this form when completed must be presented to the Local Plumbing Inspector to obtain a permit.	Page 1 of 2

Town	Street, Road, etc. If on water body, give name	Permit No.	Date
Augusta	Westwood Road	22152M	5-5-77

Owner of property: Richard Soucie, Owner's address: 94 Parkwood Drive, Augusta, Maine

Size of lot: 200 X 185 ○ Sq. feet ○ Acres

Name & type of establishment if other than private home:

Is lot Zoned? ○ Yes ☒ No — Type of Zoning: ○ Residential ○ Commercial ○ Resource Protection

Name of applicant Owner's agent: x Richard Soucie

If you plan to use a previous subdivision approval in lieu of site investigation, please submit one of the following:
○ Deed restriction re. private sewage disposal
○ Copy of the subdivision's soils report
○ Soils report from a State Agency

Applicant's address Street, Box, etc.: Tel. No. 623-3891

Town: zip code:

Subdivision name: Buena Vista Park — Lot No. 11, 12, 13, 14.

Applicant's signature: Bill Rodrigue

Owner's signature: x Bill Rodrigue — Date: x 5-5-77

This application is for: ☒ New System ○ Expanded System ○ Replacement System ○ Replacement of ○ Treatment Tank Only ○ Disposal Area Only

The water supply for this property is: ○ Dug well, depth ____, lining ____; ○ Drilled well, depth ____, lining ____; Spring ○ Drilled well to be minimum 100' from tank and bed depth ____, lining ____; Surface water ○ Body, ○ Course— ○ with disinfection, ○ without disinfection. ○ Public Utility, name ____

SITE INVESTIGATION

Show location of pits and/or borings on sketch on page 2, and refer to completed sample form and Chapter 4 of the Code, II.

	Soil Profile No. Tp1	Soil Profile No.	Soil Profile No.	Soil Profile No.	Soil Profile No.
	☒ Pit ☐ Boring	☐ Pit ☐ Boring	☐ Pit ☐ Boring	☐ Pit ☐ Boring	☐ Pit ☐ Boring
Thickness & Description of each strata encountered: Organic strata	+1 Inches	Inches	Inches	Inches	Inches
1st strata	Red brown 16" sandy loam Inches	Inches	Inches	Inches	Inches
2nd strata	Yellow brown 2" sandy loam Inches	Inches	Inches	Inches	Inches
3rd strata	Inches	Inches	Inches	Inches	Inches
Depth from surface of ground to: Total Depth of observation hole	Inches 18	Inches	Inches	Inches	Inches
Max. Ground water table—mottling	☒ None Evident Inches	○ None Evident Inches	○ None Evident Inches	○ None Evident Inches	○ None Evident Inches
Impervious layer, clay, etc.	☒ None Evident Inches	○ None Evident Inches	○ None Evident Inches	○ None Evident Inches	○ None Evident Inches
Bedrock	21 Inches ○ None Evident Type of Bedrock	Inches ○ None Evident Type of Bedrock	Inches ○ None Evident Type of Bedrock	Inches ○ None Evident Type of Bedrock	Inches ○ None Evident Type of Bedrock
Surface slope	2 %	%	%	%	%
Soil Group & Condition per Table 9-1 of the Code, II	2-A				

On 3/28/77 (date), a site investigation for this project was completed. I supervised this soil evaluation and certify that the results indicated above best represent the soil conditions found. I recommend the following type and size of private sewage disposal system. I also recommend the proposed private sewage disposal system layout and location shown on page 2.

Signature and Registration/Certification Number: [signature]

Date signed 4/3/77

○ Soil Scientist ☒ Geologist ○ Soil Engineer ○ Other, must show current letter of certification to LPI

PRIVATE SEWAGE DISPOSAL SYSTEM PROPOSED

Show location of system and details on sketches on page 2, and refer to completed sample form

SYSTEM:
☒ COMBINED SYSTEM
○ SEPARATED SYSTEM
If separated system—type of human waste dipsosal system to be used:
○ Sealed Vault Privy
○ Open Pit Privy
○ Compost Toilet
○ Incinerator Toilet
○ Chemical Toilet
○ Other, describe

See Chapter 9 of the Code, II.

TREATMENT TANK:
☒ Septic Tank
☒ Concrete
○ Fiberglas
○ Metal
Manufacturer—
Size in gallons 1000

○ Aerobic Tank
Manufacturer—
Model No.
Size in gallons

SUBSURFACE ABSORPTION AREA

Type:
○ Trench System: Total trench length ____
☒ Bed System Length 50 Width 20
○ Chamber System Number ○ Type A ○ Type F ○ Single File ○ Cluster
○ Mound System Length Width at base
○ Special System Length Width
○ Non-discharge System Bed-Length Width Holding Tank Size Gal. Manufacturer
○ Alarm device provided, type

SIZE:
○ Very Small
○ Small
○ Medium
☒ Medium Large
○ Large
○ Extra Large

SITE MODIFICATION
Fill is ☒ required, ○ not required
Fill will be 30 inches deep

DETAILS
○ A Distribution Box is required
Pumping is ○ required, ○ is not required
The Dose will be Depends on tank elevation gallons

DISTANCES
☒ Yes ○ No: The proposed subsurface absorption area will be located at least 100 feet from any and all wells; springs; surface water bodies and courses (lake, pond, ocean, brook, stream, river); swamps; marshes; and bogs.
☒ Yes ○ No: The proposed subsurface absorption area will be located at least 300 feet from any and all wells and springs producing 2000 gallons or more of water per day and any public water supplies.

PROPERTY / LOT LOCATION MAP

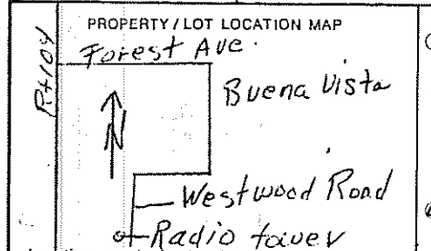

Location—roads, landmarks

FOR THE USE OF LPI ONLY

○ Denial: Application is denied for following reasons; portions of the Code II are cited.
Form is incomplete (____ pg.) as to ○ General info, ○ Site Investigation, ○ System Proposed, ○ Site Plan, ○ Disposal System Plan, ○ Cross-Section, ○ Statement. See Section 2.3.
○ Site Investigation indicates site is ○ totally unsuitable for disposal system; Sections 4.5 and 9.5, Table 9-1 Group 9 and 10. ○ Unsuitable for system proposed; Sections 4.3, 4.6, 9.5, Table 9-1.
○ System Proposed does not conform to Code; See Sections 9. ____
○ Site Investigation indicates site modifications are necessary; See Sections ○ 4.3, ○ 4.4, ○ 4.6, ○ 8.7, ○ ____.
○ Miscellaneous ____ See Section ____.
☒ Acceptance: Application for permit is approved ○ with condition specified, comply with Section ____ ○ without condition.

Signed LPI Richard P. Baker Date 5-5-77

HHE-200 5/75

APPLICATION FOR PRIVATE SEWAGE DISPOSAL PERMIT

(For systems disposing of less than 2000 gallons per day)

Town	Street, Road, etc. If on water body, give name	Owner of property
Augusta	Westwood Road	Richard Soucie

Site Plan

Scale 1" = Ft. or 1" = 50'

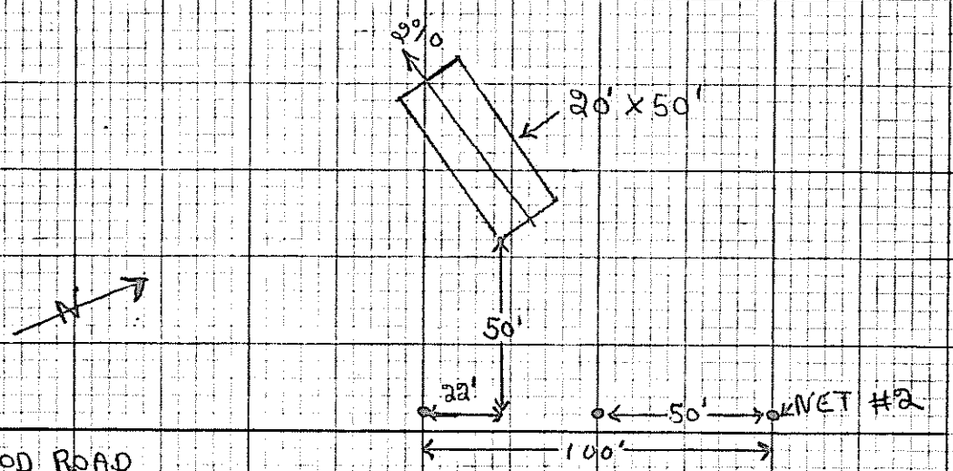

Private Sewage Disposal Plan

Scale 1" = 20' or

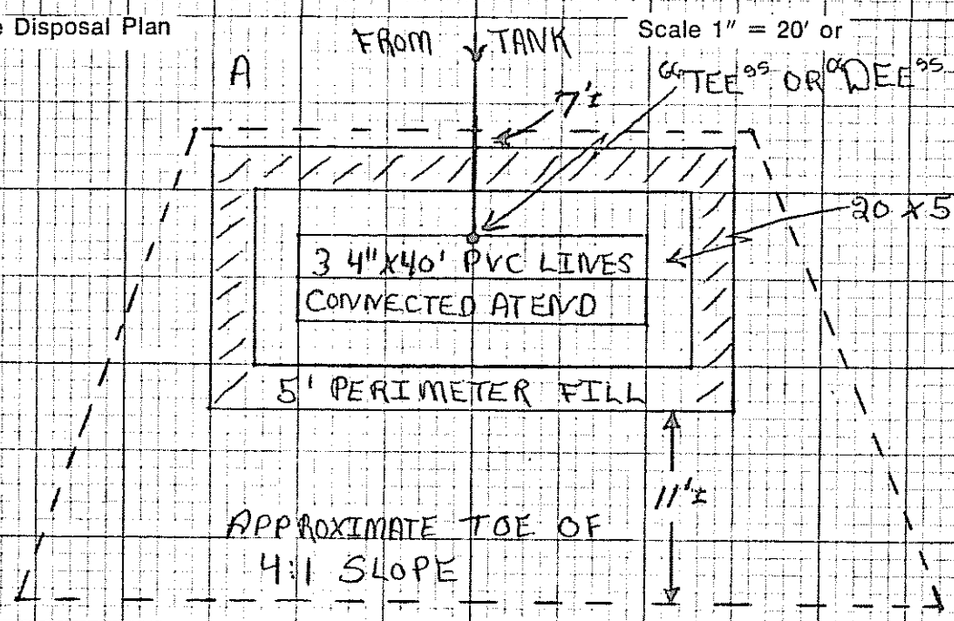

Subsurface Absorption Area Cross-section

① 3" TOPSOIL CROWNED @ 3%
② 8" SAND ③ 1" HAY
④ 10" STONE ⑤ 2" SAND

Scale: Vertical — 1" = 5' or
Horizontal — 1" = or 1" = 10'

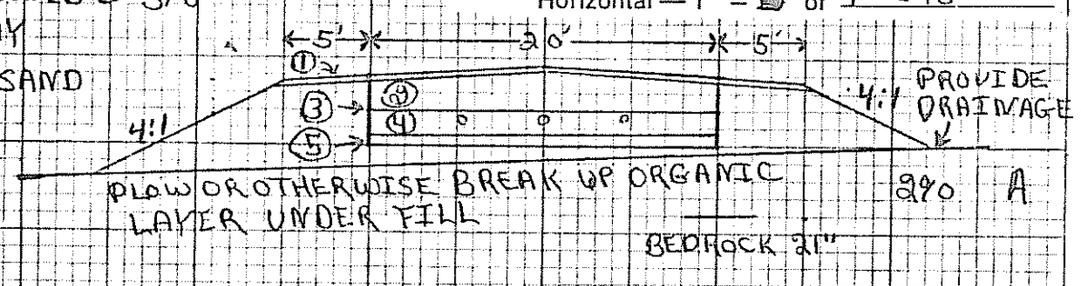

HHE - 200 5/75

Statement: (no permit may be issued unless signed)

I certify that all the information submitted to be true and correct; and I understand that issuance of a permit is based upon the information and plans submitted by the applicant. I also understand that any falsification of this application is reason to deny a permit to install a private sewage disposal system and that the permit is valid for a six (6) month period from the date of permit issuance. I understand that no guarantee is intended or implied by reason of any advice or approval given by the Administrative Authority or its agent.

Signature Required

Date: 6-5-97

Applicant: Richard Soucie

Owner: Irene Rodrigue