M11 L20

Department of Human Services
Division of Health Engineering
(207) 289-3826

SUBSURFACE WASTEWATER DISPOSAL SYSTEM APPLICATION

PROPERTY ADDRESS

Town Or Plantation	AUGUSTA
Street Subdivision Lot #	OCHARD STREET

PROPERTY OWNERS NAME

Last:	First:
Applicant Name:	GILPATRICK WALDO
Mailing Address of Owner/Applicant (If Different)	R-5A B-267 GARDINER, ME. 04345

AUGUSTA PERMIT # 532 ✓ TOWN COPY

Date Permit Issued: 8 9 85

$ 40 FEE ☐ If Double Fee Charged

L.P.I. # 759

Local Plumbing Inspector Signature

Owner/Applicant Statement

I certify that the information submitted is correct to the best of my knowledge and understand that any falsification is reason for the Local Plumbing Inspector to deny a Permit.

Signature of Owner/Applicant — Date: 8-5-85

Caution: Inspection Required

I have inspected the installation authorized above and found it to be in compliance with the Subsurface Wastewater Disposal Rules.

Local Plumbing Inspector Signature — Date Approved: 8/12/85

PERMIT INFORMATION

THIS APPLICATION IS FOR:

1. ☐ NEW SYSTEM
2. ☒ REPLACEMENT SYSTEM
3. ☐ EXPANDED SYSTEM
4. ☐ SEASONAL CONVERSION
5. ☐ EXPERIMENTAL SYSTEM

THIS APPLICATION REQUIRES:

1. ☐ NO RULE VARIANCE REQUIRED
2. ☐ NEW SYSTEM VARIANCE Attach New System Variance Form
   ☐ REPLACEMENT SYSTEM VARIANCE Attach Replacement System Variance Form
3. ☐ Requiring Local Plumbing Inspector Approval
4. ☐ Requires State and Local Plumbing Inspector Approval

INSTALLATION IS:

COMPLETE SYSTEM

1. ☒ NON-ENGINEERED SYSTEM
2. ☐ PRIMITIVE SYSTEM (Includes Alternative Toilet)
3. ☐ ENGINEERED (+2000 gpd)

INDIVIDUALLY INSTALLED COMPONENTS:

4. ☐ TREATMENT TANK (ONLY)
5. ☐ HOLDING TANK
6. ☐ ALTERNATIVE TOILET (ONLY)
7. ☐ NON-ENGINEERED DISPOSAL AREA (ONLY)
8. ☐ ENGINEERED DISPOSAL AREA (ONLY)
9. ☐ SEPARATED LAUNDRY SYSTEM

IF REPLACEMENT SYSTEM:

YEAR FAILING SYSTEM INSTALLED _____

THE FAILING SYSTEM IS:

1. ☐ BED 3. ☐ TRENCH
2. ☐ CHAMBER 4. ☐ OTHER: _____

DISPOSAL SYSTEM TO SERVE:

1. ☐ SINGLE FAMILY DWELLING
2. ☒ MODULAR OR MOBILE HOME
3. ☐ MULTIPLE FAMILY DWELLING
4. ☐ OTHER _____ SPECIFY

SIZE OF PROPERTY: 10000 □'

ZONING:

TYPE OF WATER SUPPLY: CITY WATER

DESIGN DETAILS (SYSTEM LAYOUT SHOWN ON PAGE 3)

TREATMENT TANK

1. ☒ SEPTIC: ☐ Regular ☐ Low Profile
2. ☐ AEROBIC

SIZE: 1000 GALS.

WATER CONSERVATION

1. ☒ NONE
2. ☐ LOW VOLUME TOILET
3. ☐ SEPARATED LAUNDRY SYSTEM
4. ☐ ALTERNATIVE TOILET

SPECIFY: _____

PUMPING

1. ☐ NOT REQUIRED
2. ☒ MAY BE REQUIRED (DEPENDING ON TREATMENT TANK LOCATION AND ELEVATION)
3. ☐ REQUIRED

DOSE: 40 GALS.

CRITERIA USED FOR DESIGN FLOW (BEDROOMS, SEATING, EMPLOYEES, WATER RECORDS, ETC.)

2 BEDROOM

DESIGN FLOW: 240 (GALLONS/DAY)

SOIL CONDITIONS USED FOR DESIGN PURPOSES

PROFILE	CONDITION
3	A/C

DEPTH TO LIMITING FACTOR: 30/24.

SIZE RATINGS USED FOR DESIGN PURPOSES

1. ☐ SMALL
2. ☐ MEDIUM
3. ☒ MEDIUM-LARGE
4. ☐ LARGE
5. ☐ EXTRA LARGE

DISPOSAL AREA TYPE/SIZE

1. ☐ BED _____ Sq. Ft.
2. ☒ CHAMBER 384 Sq. Ft. ☐ REGULAR ☐ H-20
3. ☐ TRENCH _____ Linear Ft.
4. ☐ OTHER: _____

SITE EVALUATOR STATEMENT

☐ SITE EVALUATION WAIVED BY LOCAL OPTION)

On 7/31/85 (date) I conducted a site evaluation for this project and certify that the data reported is accurate. The system I propose is in accordance with the Subsurface Wastewater Disposal Rules.

Site Evaluator Signature — SE# #51 — Date 8/1/85

* Local Plumbing Inspectors Signature if a Local Site Evaluation Waiver under a Local Option

SUBSURFACE WASTEWATER DISPOSAL SYSTEM APPLICATION

Department of Human Services
Division of Health Engineering

Town, City, Plantation	Street, Road, Subdivision	Owners Name

SITE PLAN Scale 1" = 30 Ft.

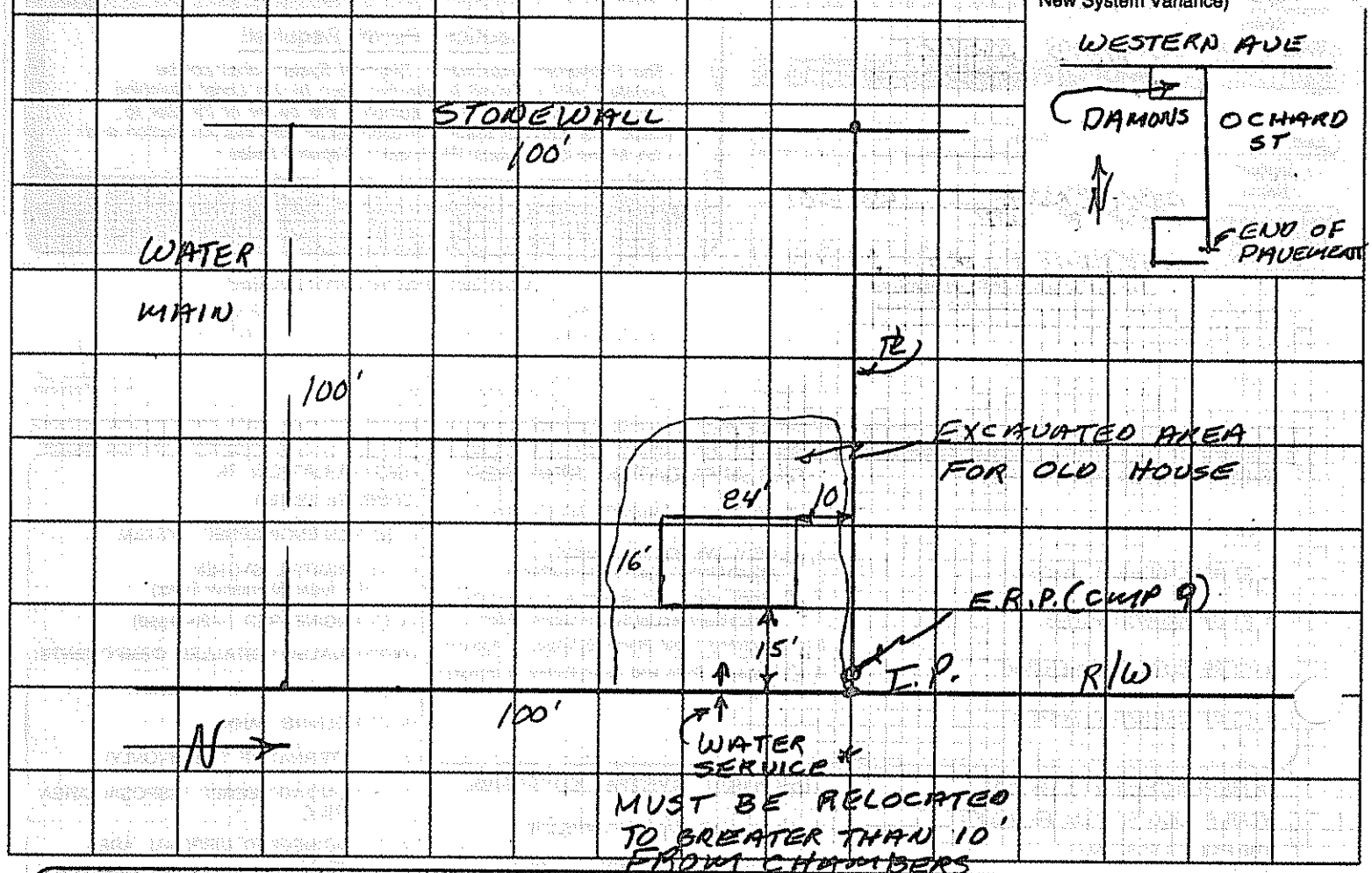

SITE LOCATION PLAN (Attach Map from Maine Atlas for New System Variance)

SOIL DESCRIPTION AND CLASSIFICATION (Location of Observation Holes Shown Above)

Observation Hole _____ ☐ Test Pit ☐ Boring

_____" Depth of Organic Horizon Above Mineral Soil

Depth below mineral soil surface (inches)	Texture	Consistency	Color	Mottling
0–6	S.L.	FRIABLE	B.	
6–24	G.T.	FIRM	G.B.	
24–30	POSSIBLE LEDGE			

Soil Profile	Classification Condition	Slope	Limiting Factor	
3	A/C	6 %	30/24"	☒ Ground Water ☐ Restrictive Layer ☐ Bedrock

Observation Hole _____ ☐ Test Pit ☐ Boring

_____" Depth of Organic Horizon Above Mineral Soil

Depth below mineral soil surface (inches)	Texture	Consistency	Color	Mottling
0–50				

Soil Profile	Classification Condition	Slope	Limiting Factor	
		%		☐ Ground Water ☐ Restrictive Layer ☐ Bedrock

[signature] #51 8/1/85

SUBSURFACE WASTEWATER DISPOSAL SYSTEM APPLICATION

Department of Human Services
Division of Health Engineering

Town, City, Plantation	Street, Road, Subdivision	Owners Name
AUGUSTA	OCHARD STREET	GILPATRICK

SUBSURFACE WASTEWATER DISPOSAL PLAN

Scale 1" = 10' Ft.

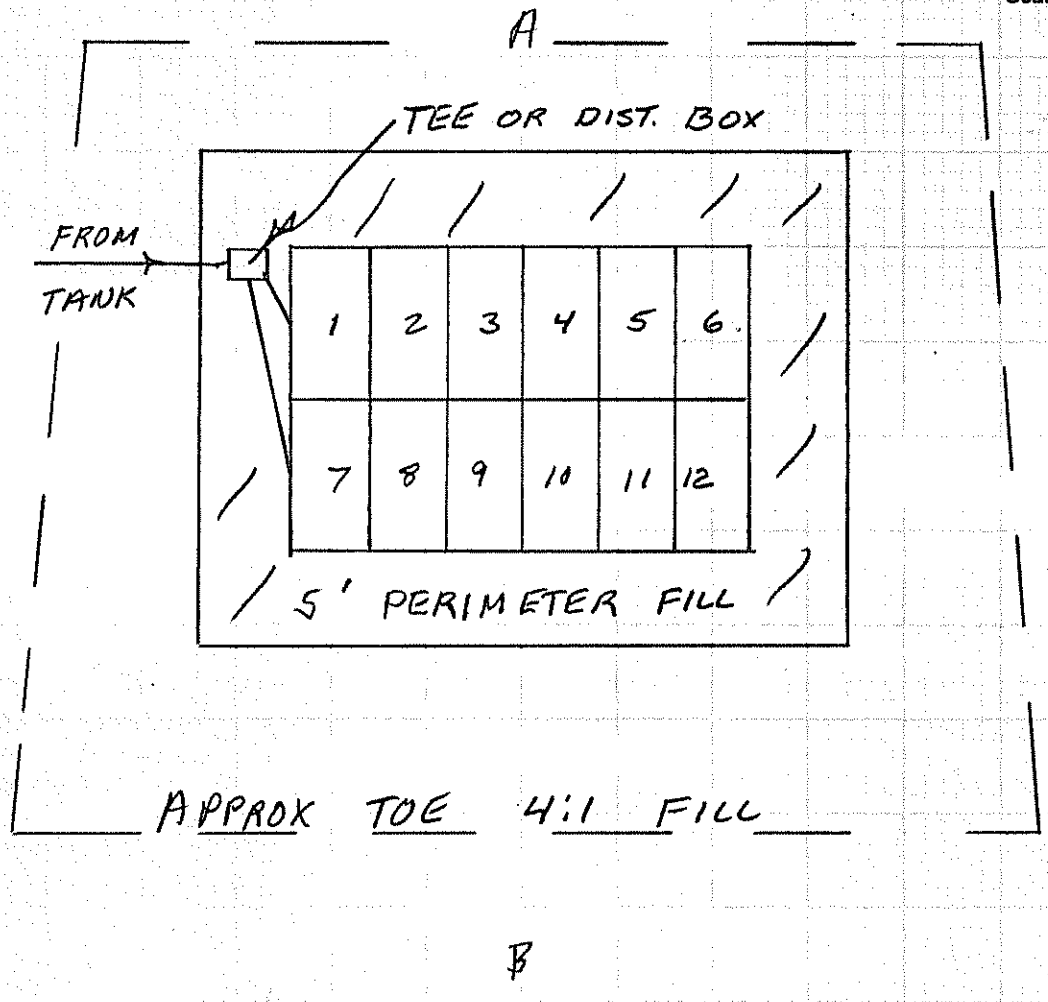

FILL REQUIREMENTS		CONSTRUCTION ELEVATIONS		ELEVATION REFERENCE POINT LOCATION & DESCRIPTION
Depth of Fill (Upslope)	24"	Reference Elevation is	0	NAIL IN CLMP POLE #9
Depth of Fill (Downslope)	24±	Bottom of Disposal Area	-43"	
		Top of Distribution Lines or Chambers	-30"	

DISPOSAL AREA CROSS SECTION

Scale:
Vertical: 1 inch = 5 Ft.
Horizontal: 1 inch = 10 Ft.

① 6" TOPSOIL CROWNED @ 3%

② 12-4'x8"x5' CHAMBERS

③ GRAVEL FILL UNDER AND AROUND CHAMBERS.

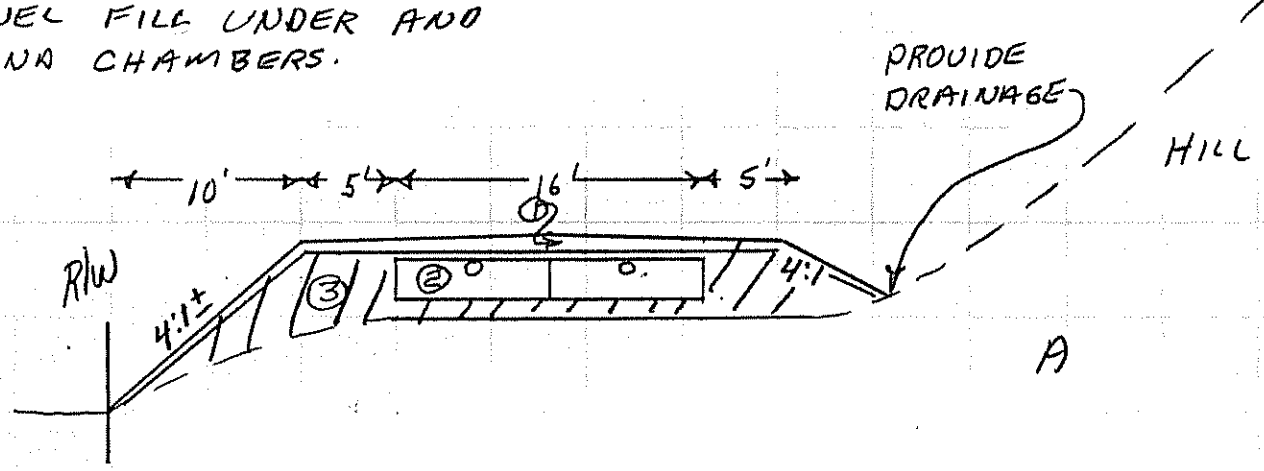

Site Evaluator Signature

SE# #51

Date 8/1/85