Note: 4 acres required per dwelling unit. 4/12/05

SUBSURFACE WASTEWATER DISPOSAL SYSTEM APPLICATION

Maine Department of Human Services
Division of Health Engineering, Station 10
(207) 287-5672 FAX (207) 287-4172

PROPERTY LOCATION

City, Town, Plantation	AUGUSTA
Street or Road	LEAVITT ROAD
Subdivision, Lot #	

>> Caution: Permit Required -- Attach In Space Below <<

AUGUSTA 4347 TOWN COPY
Date Permit Issued 3/14/2000 $ 100.00 FEE ☐ If Double Fee Charged
(Local Plumbing Inspector Signature) L.P.I. # 1

OWNER/APPLICANT INFORMATION

Name (last, first, MI): DUMONT RUSSELL (Owner / Applicant)

Mailing Address of ☒ Owner ☐ Applicant: P.O. BOX 864, AUGUSTA, MAINE 04332

Daytime Tel. #:

Municipal Tax Map # 11 Lot # 73.D

Owner or Applicant Statement

I state that the information submitted is correct to the best of my knowledge and understand that any falsification is reason for the Department and/or Local Plumbing Inspector to deny a Permit.

Russell E. Dumont 3-9-2000
Signature of Owner or Applicant — Date

Caution: Inspections Required

I have inspected the installation authorized above and found it to be in compliance with the Subsurface Wastewater Disposal Rules Application.

Local Plumbing Inspector Signature — (1st) Date Approved — (2nd) Date Approved

PERMIT INFORMATION

TYPE OF APPLICATION

1. ☒ First Time System
2. ☐ Replacement System
   Type Replaced: _____
   Year Installed: _____
3. ☐ Expanded System
   a. ☐ One-time exempted
   b. ☐ Non-exempted
4. ☐ Experimental System
5. ☐ Seasonal Conversion

THIS APPLICATION REQUIRES

1. ☒ No Rule Variance
2. ☐ First Time System Variance
   a. ☐ Local Plumbing Inspector Approval
   b. ☐ State & Local Plumbing Inspector Approval
3. Replacement System Variance
   a. ☐ Local Plumbing Inspector Approval
   b. ☐ State & Local Plumbing Inspector Approval
4. ☐ Minimum Lot Size Variance
5. ☐ Seasonal Conversion Approval

DISPOSAL SYSTEM COMPONENT(S)

1. ☒ Complete Non-engineered System
2. ☐ Primitive System (graywater & alt toilet)
3. ☐ Alternative Toilet, specify: _____
4. ☐ Non-Engineered Treatment Tank (only)
5. ☐ Holding Tank, _____ gallons
6. ☐ Non-engineered Disposal Field (only)
7. ☐ Separated Laundry System
8. ☐ Complete Engineered System (2000 gpd or more)
9. ☐ Engineered Treatment Tank (only)
10. ☐ Engineered Disposal Field (only)
11. ☐ Pre-treatment, specify:
12. ☐ Miscellaneous components

SIZE OF PROPERTY

± 28 ☐ sq. ft. ☒ acres

SHORELAND ZONING

☐ Yes ☒ No

DISPOSAL SYSTEM TO SERVE

1. ☐ Single Family Dwelling Unit, No. of Bedrooms: _____
2. ☒ Multiple Family Dwelling, No. of Units: X 2 gd.
3. ☐ Other: _____ (SPECIFY)

TYPE OF WATER SUPPLY

1. ☐ Drilled Well 2. ☐ Dug Well 3. ☐ Private
4. ☐ Public 5. ☐ Other:

DESIGN DETAILS (SYSTEM LAYOUT SHOWN ON PAGE 3)

TREATMENT TANK

1. ☒ Concrete - (2)
   a. ☒ Regular
   b. ☐ Low Profile
2. ☐ Plastic
3. ☐ Other: _____

CAPACITY 1000 gallons EACH

DISPOSAL FIELD TYPE & SIZE

1. ☒ Stone Bed 2. ☐ Stone Trench
3. ☐ Proprietary Device
   a. ☐ Cluster array c. ☐ Linear
   b. ☐ Regular load d. ☐ H-20 load
4. ☐ Other: _____

SIZE 1600 ☒ sq. ft. ☐ lin. ft.

GARBAGE DISPOSAL UNIT

1. ☒ No 3. ☐ Maybe
2. ☐ Yes >> Specify one below:
   a. ☐ Multi-compartment Tank
   b. ☐ Tanks in Series
   c. ☐ Increase in Tank Capacity
   d. ☐ Filter on Tank Outlet

DESIGN FLOW

450 gallons per day

BASED ON:
1. ☒ Table 501.1 (dwelling unit(s)
2. ☐ Table 501.2 (other facilities)
   SHOW CALCULATIONS
   -- for other facilities --
3. ☐ Section 503.0 (meter readings)
   ATTACH WATER-METER DATA

SOIL DATA & DESIGN CLASS

PROFILE	CONDITION	DESIGN
3	C	16"

at Observation Hole # 3
Depth 15" Elevation _____"
OF MOST LIMITING SOIL FACTOR

DISPOSAL FIELD SIZING

1. ☐ Small -- 2.0 sq. ft./gpd
2. ☐ Medium -- 2.6 sq. ft./gpd
3. ☒ Medium-Large -- 3.3 sq. ft./gpd
4. ☐ Large -- 4.1 sq. ft./gpd
5. ☐ Extra Large -- 5.0 sq. ft./gpd

PUMPING

1. ☐ Not Required
2. ☒ May Be Required
3. ☐ Required >> Specify only for engineered or experimental systems:
   DOSE: _____ gallons

SITE EVALUATOR STATEMENT

I certify that on 10/23/99 (date) I completed a site evaluation on this property and state that the data reported are accurate and that the proposed system is in compliance with the State of Maine Subsurface Wastewater Disposal Rules (10-144A CMR 241).

Vaughn L. Smith — Site Evaluator Signature
226 SMITH #226 — Site Evaluator Reg. #
11/27/99 — Date
VAUGHN L. SMITH — Site Evaluator Name Printed
Telephone #

STATE OF MAINE — VAUGHN L. SMITH — LICENSED — SITE EVALUATOR

SUBSURFACE WASTEWATER DISPOSAL SYSTEM APPLICATION

Department of Human Services
Division of Health Engineering
(207) 287-5672 FAX (207) 287-4172

Town, City, Plantation: AUGUSTA
Street, Road Subdivision: LEAVITT ROAD
Owner's Name: RUSSELL DUMONT

SITE PLAN — Scale 1" = 200 Ft. or as shown

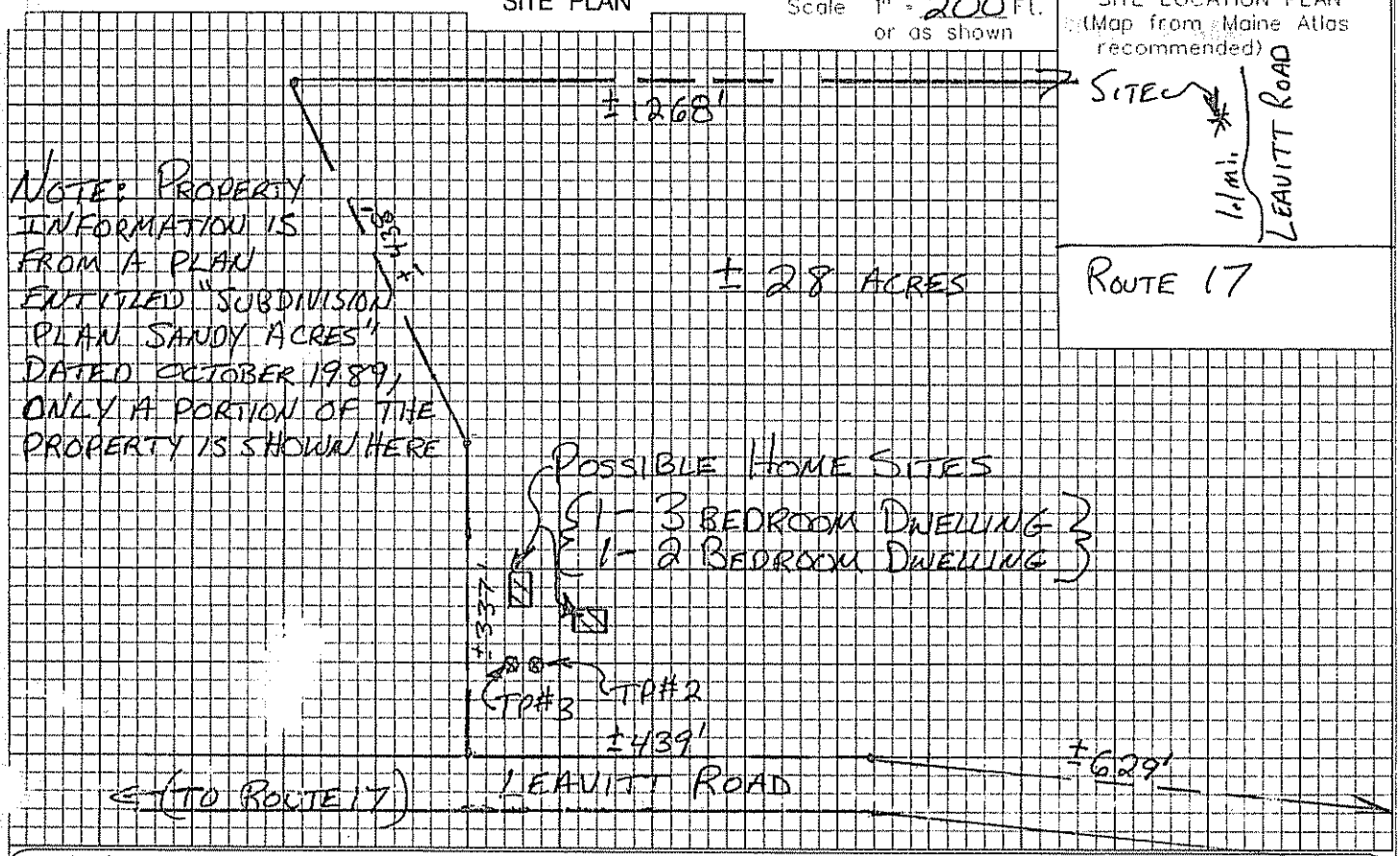

SOIL DESCRIPTION AND CLASSIFICATION (Location of Observation Holes Shown Above)

Observation Hole #2 ☒ Test Pit ☐ Boring
3" Depth of Organic Horizon Above Mineral Soil

Depth below mineral soil surface (inches)	Texture	Consistency	Color	Mottling
0–10	LOAM	FRIABLE	BROWN	NONE
10–20				
20–30	GRAVELLY	FIRM	OLIVE BROWN	FEW FAINT
30–40	SANDY LOAM			
40–50				

Soil Classification: Profile 3, Condition C
Slope: 7%
Limiting Factor: 16" ☒ Ground Water ☐ Restrictive Layer ☐ Bedrock ☐ Pit Depth

Observation Hole #3 ☒ Test Pit ☐ Boring
3" Depth of Organic Horizon Above Mineral Soil

Depth below mineral soil surface (inches)	Texture	Consistency	Color	Mottling
0–10	LOAM	FRIABLE	BROWN	NONE
10–20	COBBLY FINE SANDY LOAM	FIRM	YELLOWISH BROWN	
20–30			OLIVE	FEW FAINT
30–40				
40–50				

Soil Classification: Profile, Condition C
Slope: 5%
Limiting Factor: 16" ☒ Ground Water ☐ Restrictive Layer ☐ Bedrock ☐ Pit Depth

STATE OF MAINE — VAUGHN L. SMITH #226 — LICENSED SITE EVALUATOR

Vaughn L. Smith
Site Evaluator Signature

11/27/99
Date

SUBSURFACE WASTEWATER DISPOSAL SYSTEM APPLICATION

Department of Human Services
Division of Health Engineering
(207) 287-5672 FAX (207) 287-4172

Town, City, Plantation	Street, Road, Subdivision	Owner's Name
AUGUSTA	LEAVITT ROAD	RUSSELL DUMONT

SUBSURFACE WASTEWATER DISPOSAL PLAN

SCALE 1" = 20 FT.

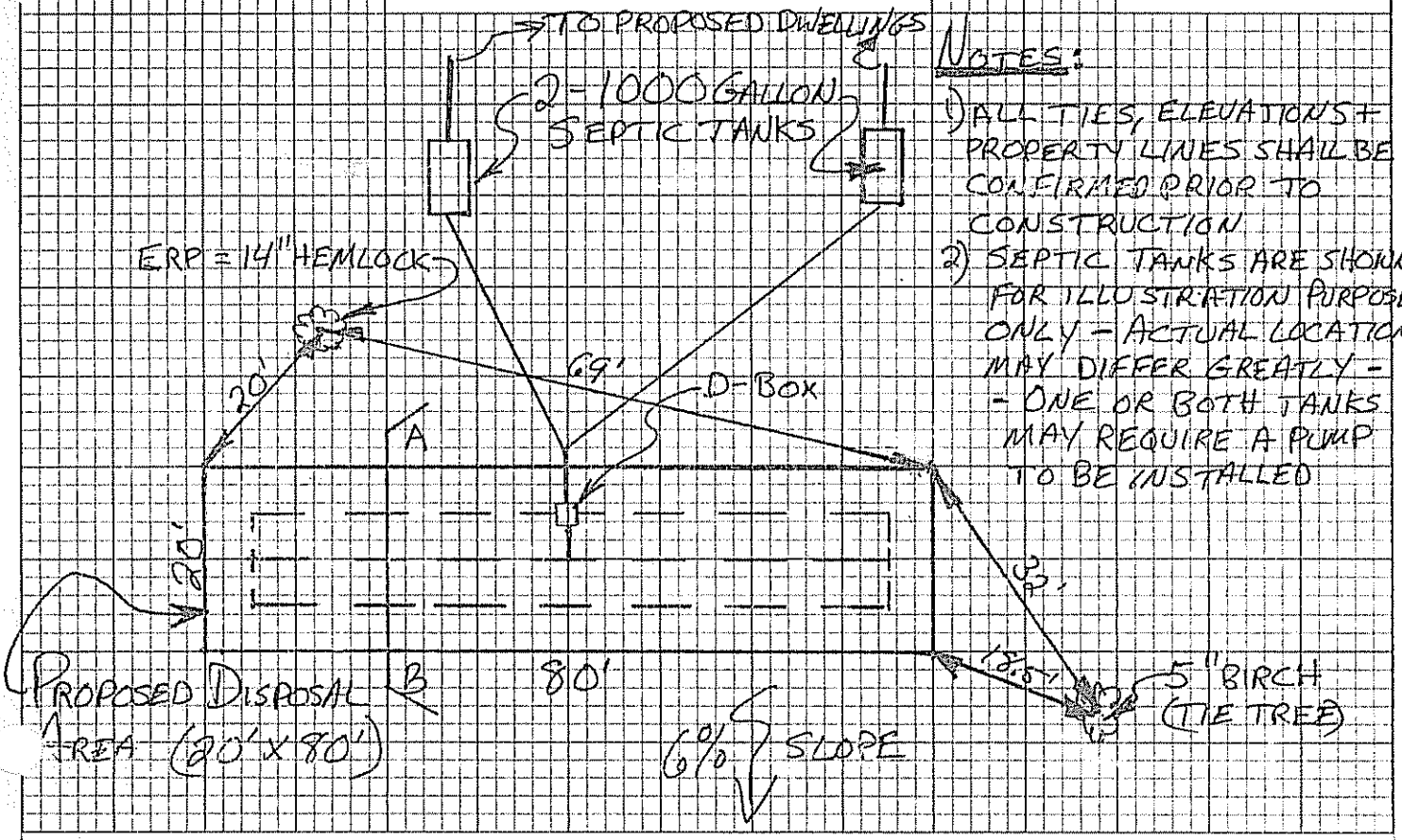

NOTES:

1) ALL TIES, ELEVATIONS + PROPERTY LINES SHALL BE CONFIRMED PRIOR TO CONSTRUCTION
2) SEPTIC TANKS ARE SHOWN FOR ILLUSTRATION PURPOSES ONLY - ACTUAL LOCATION MAY DIFFER GREATLY - - ONE OR BOTH TANKS MAY REQUIRE A PUMP TO BE INSTALLED

FILL REQUIREMENTS		CONSTRUCTION ELEVATIONS		ELEVATION REFERENCE POINT
Depth of Fill (Upslope)	22"	Finished Grade Elevation	-30"	Location & Description 14" HEMLOCK W/NAIL 25" ABOVE GRADE
Depth of Fill (Downslope)	38"	Top of Distribution Pipe or Proprietary Device	-42"	
FILL DEPTHS WILL VARY		Bottom of Disposal Area	-54"	Reference Elevation 0"

DISPOSAL AREA CROSS SECTION

SCALE: VERTICAL: 1" = 5' HORIZONTAL: 1" = 10'

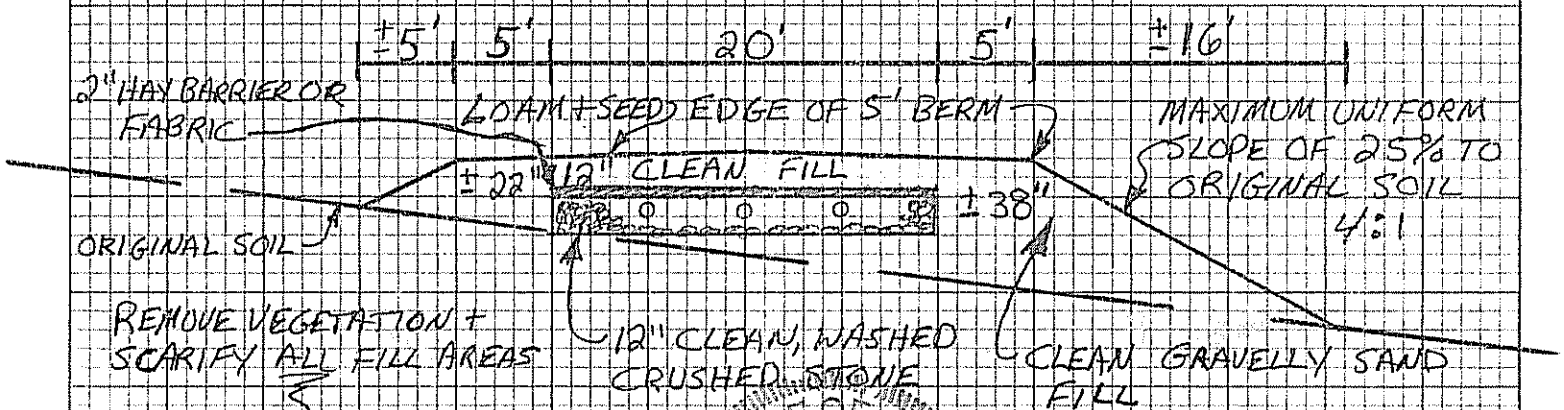

Vaughn L. Smith
Site Evaluator Signature

STATE OF MAINE
VAUGHN L. SMITH
2266
LICENSED
SITE EVALUATOR

11/27/99
Date