ORIGINAL To be sent to Division of Health Engineering, Augusta, Maine 04333 by the LPI

Turner Farms

MAINE DEPARTMENT OF HUMAN SERVICES APPLICATION FOR PRIVATE SEWAGE DISPOSAL PERMIT	(For systems disposing of less than 2000 gallons per day)	This is NOT a permit; this form when completed must be presented to the Local Plumbing Inspector to obtain a permit.	Page 1 of 2

Town	Street, Road, etc. If on water body, give name	Permit No.	Date
Augusta	Church Hill Road	21613M	4-20-77

Owner of property: Janice Turner
Owner's address: R.F.D. # 1 Augusta, Me. 04330
Size of lot: 3/4 ○ Sq. feet ● Acres

Name & type of establishment if other than private home: _____ gpd
Is lot Zoned? ○ Yes ● No
Type of Zoning: ○ Shoreland ○ Resource Protection

Name of applicant Owner's agent:
Applicant's address Street, Box, etc.:
Tel. No. 622-2728
Town:
zip code 04330

If you plan to use a previous subdivision approval in lieu of site investigation, please submit one of the following:
○ Deed restriction re. private sewage disposal
○ Copy of the subdivision's soils report
○ Soils report from a State Agency

Subdivision name: Lot No.:

Applicant's signature:
Owner's signature: Ralph Turner
Date: 4-20-77

This application is for: ● New System ○ Expanded System ○ Replacement System ○ Replacement of ○ Treatment Tank Only ○ Disposal Area Only

The water supply for this property is: ○ Dug well, depth _____, lining _____; ● Drilled well, to be drilled Spring ○ depth _____, lining _____; Surface water ○ Body, ○ Course—○ with disinfection, ○ without disinfection. ○ Public Utility, name _____

SITE INVESTIGATION

Show location of pits and/or borings on sketch on page 2, and refer to completed sample form and Chapter 4 of the Code, II.

Soil Profile No. 1
● Pit ☐ Boring

Description of encountered / Thickness of each soil:
- Organic strata: 0 Inches
- 1st strata: dark brown sandy loam, 6½" Inches
- 2nd strata: light brown sandy loam, 16" Inches
- 3rd strata: olive sandy loam, 6" Inches

Depth from bottom of organic horizon to:
- Total Depth of observation hole: 28½ Inches
- Max. Ground water table—mottling: ○ None Evident; 22 Inches
- Impervious layer, clay, etc.: ● None Evident; Inches
- Bedrock: 28½ Inches; ○ None Evident; Type of Bedrock

Surface slope: 3 %
Soil Group & Condition per Table 9-1 of the Code, II: 2C

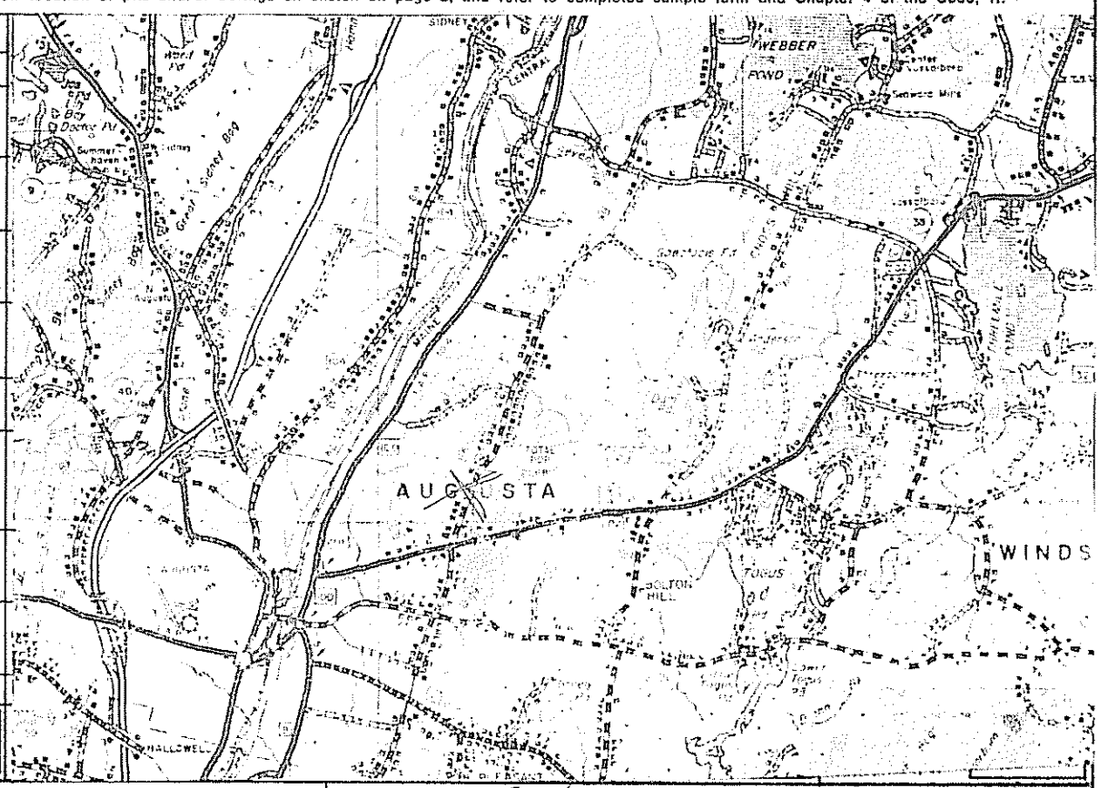

On April 15, 1977 (date), a site investigation for this project was completed. I conducted this soil evaluation and certify that the results indicated above best represent the soil conditions found. I recommend the following type and size of private sewage disposal system. I also recommend the proposed private sewage disposal system layout and location shown on page 2.

Signature: Lloyd C. Rowe
Health Engineering License No. 42
Date signed: April 18, 1977

PRIVATE SEWAGE DISPOSAL SYSTEM PROPOSED

Show location of system and details on sketches on page 2, and refer to completed sample form

SYSTEM:
● COMBINED SYSTEM
○ SEPARATED SYSTEM
If separated system—type of human waste disposal system to be used:
○ Sealed Vault Privy
○ Open Pit Privy
○ Compost Toilet
○ Incinerator Toilet
○ Chemical Toilet
○ Other, describe

See Chapter 9 of the Code, II.

TREATMENT TANK:
● Septic Tank
● Concrete
○ Fiberglas
○ Metal
Size in gallons: 1000

○ Aerobic Tank
Manufacturer—
Model No.
Size in gallons

SUBSURFACE ABSORPTION AREA

Type	SIZE
○ Trench System: Total trench length. _____	○ Very Small ○ Small ○ Medium ● Medium Large ○ Large ○ Extra Large
● Bed System Length 50 Width 20	
○ Chamber System ○ Type A ○ Type B; Number ○ Single File ○ Cluster	
○ Mound System Length Width at base	
○ Special System Length Width	

WAIVER
○ Required
● Not Required

SITE MODIFICATION
Fill will be: 26 in. uphill; 44 in. downhill

DETAILS
● A Distribution Box is recommended
Pumping is—○ required, ● is not required.
The Dose will be _____ gallons

DISTANCES
● Yes ○ No: The proposed subsurface absorption area will be located at least 100 feet from any and all wells; springs; surface water bodies and courses (lake, pond, ocean, brook, stream, river); swamps; marshes; and bogs.
● Yes ○ No: The proposed subsurface absorption area will be located at least 300 feet from any and all wells and springs producing 2000 gallons or more of water per day and any public water supplies.

PROPERTY / LOT LOCATION MAP
1.6 miles from Route 3

Location—roads, landmarks

FOR THE USE OF LPI ONLY
○ Denial: Application is denied for following reasons; portions of the Code II are cited.
Form is incomplete (_____ pg.) as to ○ General info, ○ Site Investigation, ○ System Proposed, ○ Site Plan, ○ Disposal System Plan, ○ Cross-Section, ○ Statement. See Section 2.3.
○ Site Investigation indicates site is ○ totally unsuitable for disposal system; Sections 4.5 and 9.5, Table 9-1 Group 9 and 10. ○ Unsuitable for system proposed; Sections 4.3, 4.6, 9.5, Table 9-1.
○ System Proposed does not conform to Code; See Sections 9. _____
○ Site Investigation indicates site modifications are necessary; See Sections ○ 4.3, ○ 4.4, ○ 4.6, ○ 8.7, ○ _____
○ Miscellaneous _____ See Section _____
● Acceptance: Application for permit is approved ○ with condition specified, comply with Section _____ ● without condition.
Signed LPI: Richard A. Baker Date: 4-20-77

HHE-200 5/76

APPLICATION FOR PRIVATE SEWAGE DISPOSAL PERMIT

(For systems disposing of less than 2000 gallons per day)

Town	Street, Road, etc. / If on water body, give name	Owner of property
Augusta	Church Hill Road	Janice Turner

Site Plan

Scale 1" = 100 Ft. or _____

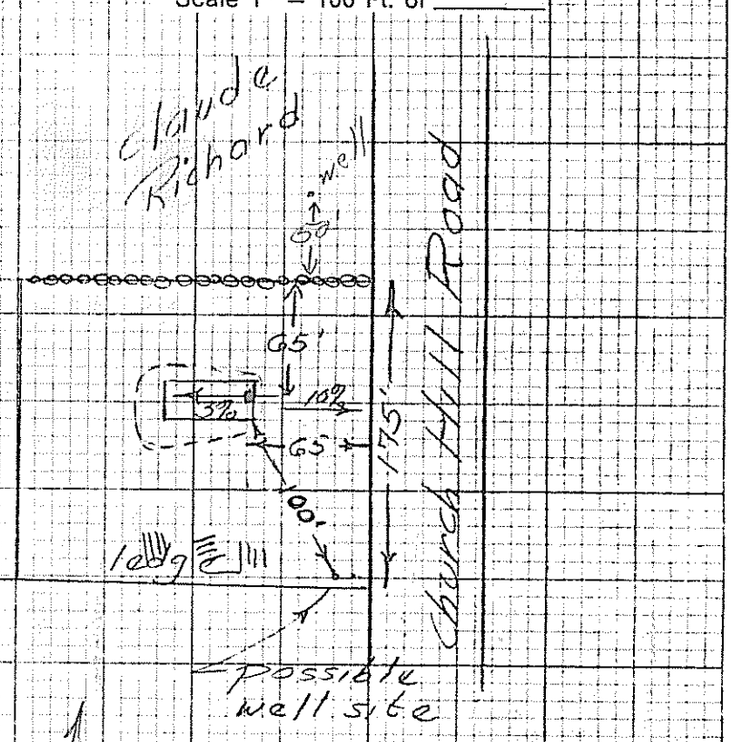

Private Sewage Disposal Plan

Scale 1" = 20' or _____

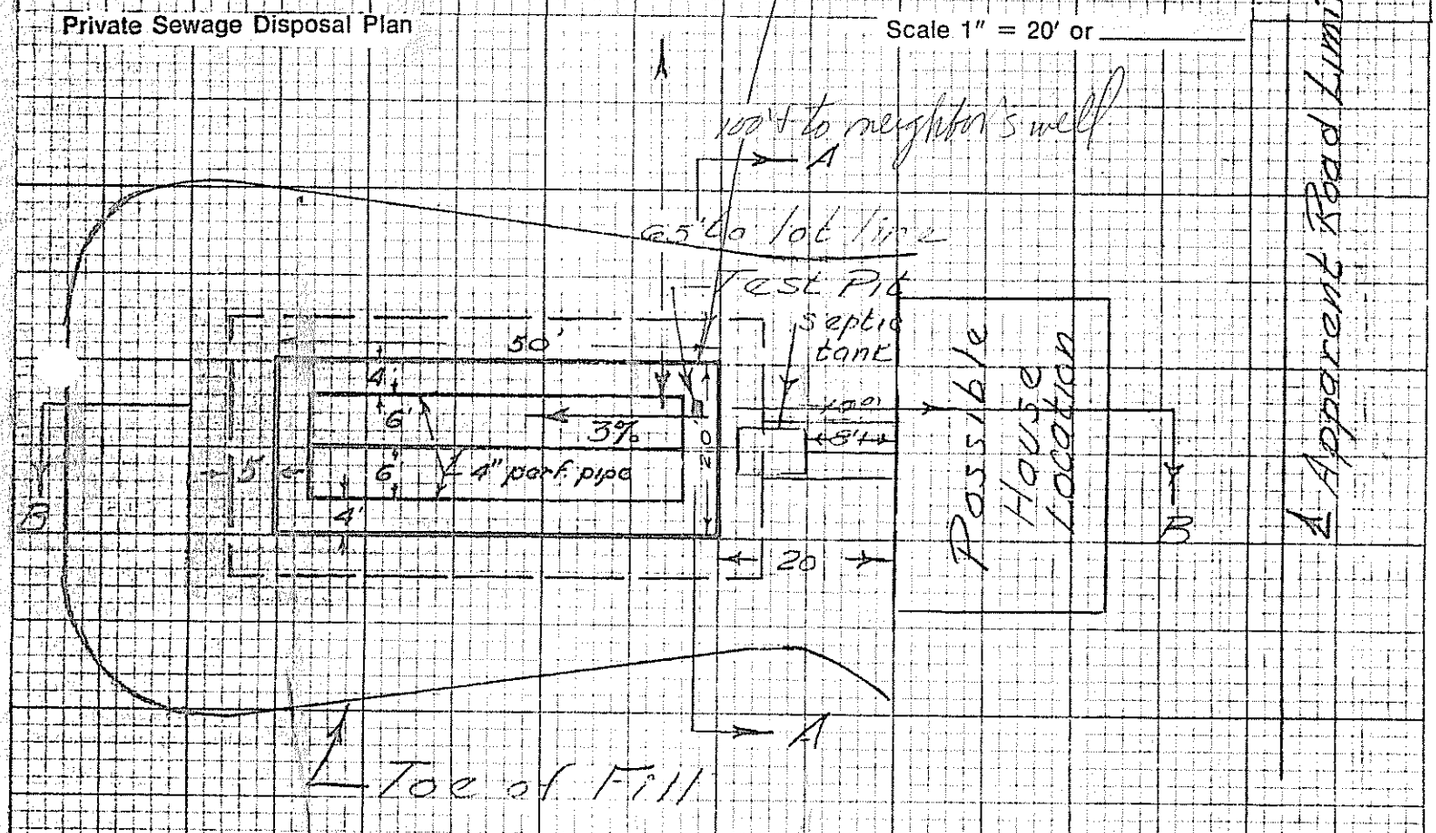

Subsurface Absorption Area Cross-section

Scale: Vertical — 1" = 5' or _____

Horizontal — 1" = 20' or _____

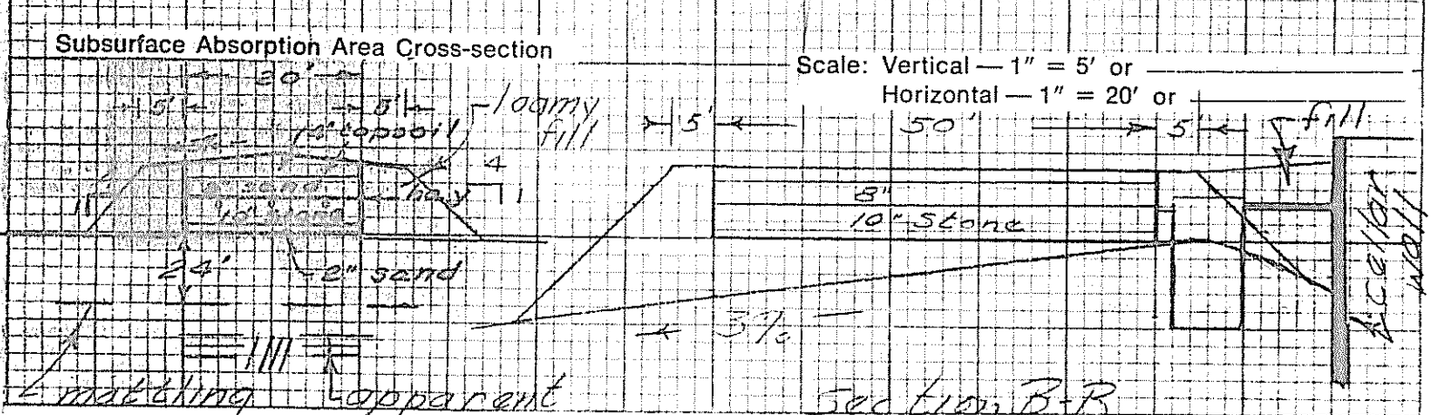

HHE - 200 5/76

Statement: (no permit may be issued unless signed)

I [illegible] that all the information submitted to be true and correct; and I understand that issuance of a permit [illegible] on the information and plans submitted by the applicant. I also understand that any falsification of [illegible] is reason to deny a permit to install a private sewage disposal system and that the permit is valid [illegible] months period from the date of permit issuance. I understand that no approval is intended or implied [illegible] approval given by the Administrative Authority or its agent.

Signature Required

Date: 4-20-77

Applicant: Ralph Turner

Sec.9.7 BEDS

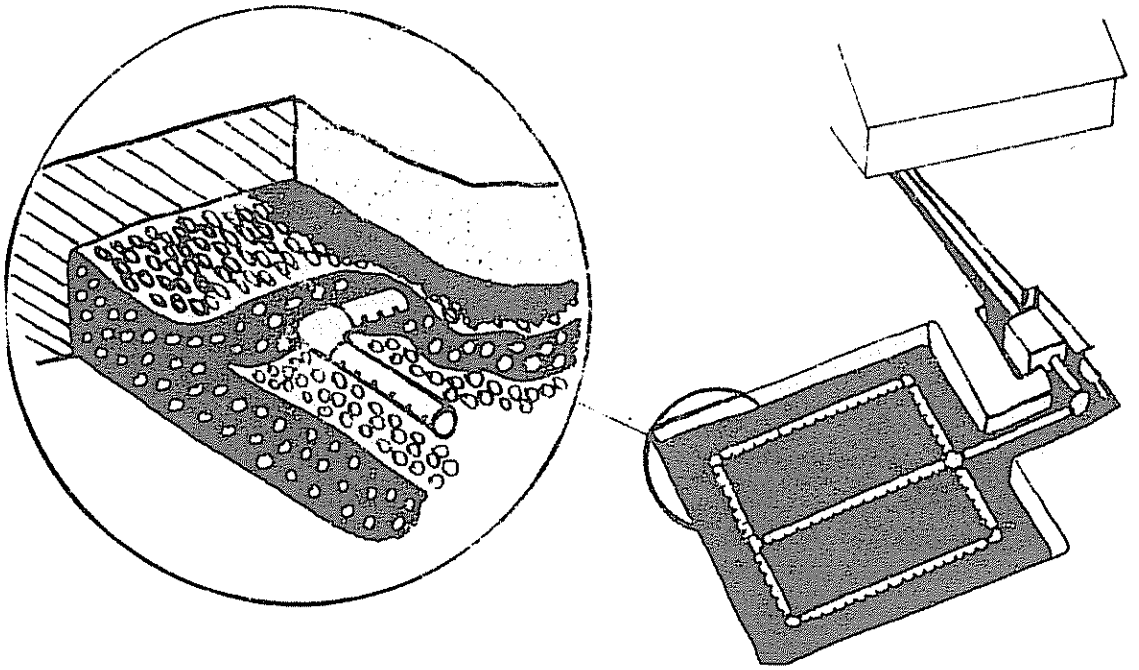

SHALLOW BEDS - DETAILS - Beds shall be constructed in accordance with the following table:

Minimum diameter of percolation line	4 inches
Maximum slope of percolation line	2 inches in 100 feet
Minimum width of bed bottom	5 feet
Minimum distance of undisturbed earth between beds (if more than one is used)	40 feet
Maximum depth of invert of percolation line	15 inches
Minimum depth of stones below the invert of percolation line	6 inches
Minimum depth of sand above the percolation line	8 inches
Minimum depth of sand below the stone layer	2 inches
Minimum thickness of stone layer	10 inches
Minimum depth of bed	24 inches
Maximum depth of bed	26 inches
Minimum thickness of topsoil over bed	3 inches
Thickness of layer of hay over stone	1 inch
Maximum width of bed bottom	20 feet
Maximum length of bed bottom	100 feet

When beds are:

10 to 14 feet wide — Use two percolation pipes

15 to 20 feet wide — Use three percolation pipes

The perforated pipe shall be installed in a closed continuous network.

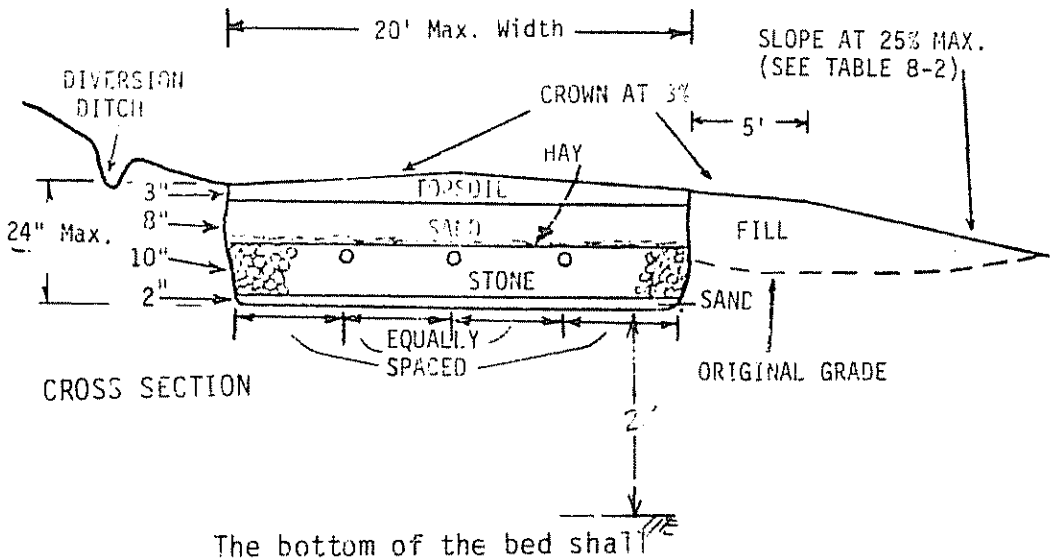

The bottom of the bed shall be two (2) feet above the seasonal high groundwater, bedrock, and impervious layer.