SUBSURFACE WASTEWATER DISPOSAL SYSTEM APPLICATION

Division of Health Engineering
(207)289-3826

M4 L10C

AUGUSTA PERMIT # 1,142 TOWN COPY

Date Permit Issued: 8/25/87 $ 140.00 FEE ☐ If Double Fee Charged

Local Plumbing Inspector Signature L.P.I. # 140F

PROPERTY ADDRESS

Town Or Plantation: AUGUSTA

Street Subdivision Lot #: INGRAHAM MT. RD.

PROPERTY OWNERS NAME

Last: SIMPSON First: TOM

Applicant Name:

Mailing Address of Owner/Applicant (If Different): P.O. BOX 2282 AUGUSTA, ME 04330

Owner/Applicant Statement

I certify that the information submitted is correct to the best of my knowledge and understand that any falsification is reason for the Local Plumbing Inspector to deny a Permit.

Signature of Owner/Applicant — Date

Caution: Inspection Required

I have inspected the installation authorized above and found it to be in compliance with the Subsurface Wastewater Disposal Rules.

Local Plumbing Inspector Signature — Date Approved: 6-16-88

PERMIT INFORMATION

THIS APPLICATION IS FOR:
1. ☒ NEW SYSTEM
2. ☐ REPLACEMENT SYSTEM
3. ☐ EXPANDED SYSTEM
4. ☐ EXPERIMENTAL SYSTEM

SEASONAL CONVERSION
To be completed by the LPI
5. ☐ SYSTEM COMPLIES WITH RULES
6. ☐ CONNECTED TO SANITARY SEWER
7. ☐ SYSTEM INSTALLED - P#
8. ☐ SYSTEM DESIGN RECORDED AND ATTACHED

IF REPLACEMENT SYSTEM:
YEAR FAILING SYSTEM INSTALLED
THE FAILING SYSTEM IS:
1 ☐ BED 3 ☐ TRENCH
2 ☐ CHAMBER 4 ☐ OTHER

THIS APPLICATION REQUIRES:
1. ☒ NO RULE VARIANCE
2. ☐ NEW SYSTEM VARIANCE — Attach New System Variance Form
3. ☐ REPLACEMENT SYSTEM VARIANCE — Attach Replacement System Variance Form
a. ☐ Requiring Local Plumbing Inspector Approval
b. ☐ Requires State and Local Plumbing Inspector Approval
4. ☐ MINIMUM LOT SIZE VARIANCE

DISPOSAL SYSTEM TO SERVE:
1. ☒ SINGLE FAMILY DWELLING
2. ☐ MODULAR OR MOBILE HOME
3. ☐ MULTIPLE FAMILY DWELLING
4. ☐ OTHER _____ SPECIFY

INSTALLATION IS:
COMPLETE SYSTEM
1. ☒ NON-ENGINEERED SYSTEM
2. ☐ PRIMITIVE SYSTEM (Includes Alternative Toilet)
3. ☐ ENGINEERED (+ 2000 gpd)

INDIVIDUALLY INSTALLED COMPONENTS:
4. ☐ TREATMENT TANK (ONLY)
5. ☐ HOLDING TANK _____ GAL
6. ☐ ALTERNATIVE TOILET (ONLY)
7. ☐ NON-ENGINEERED DISPOSAL AREA (ONLY)
8. ☐ ENGINEERED DISPOSAL AREA (ONLY)
9. ☐ SEPARATED LAUNDRY SYSTEM

SIZE OF PROPERTY	ZONING
30 Ac	

TYPE OF WATER SUPPLY
DRILLED

DESIGN DETAILS (SYSTEM LAYOUT SHOWN ON PAGE 3)

TREATMENT TANK
1. ☒ SEPTIC ☐ Regular ☐ Low Profile
2. ☐ AEROBIC

SIZE: 1000 GALS.

WATER CONSERVATION
1. ☒ NONE
2. ☐ LOW VOLUME TOILET
3. ☐ SEPARATED LAUNDRY SYSTEM
4. ☐ ALTERNATIVE TOILET

SPECIFY:

PUMPING
1. ☐ NOT REQUIRED
2. ☒ MAY BE REQUIRED (DEPENDING ON TREATMENT TANK LOCATION AND ELEVATION)
3. ☐ REQUIRED

DOSE: 50 GALS.

CRITERIA USED FOR DESIGN FLOW (BEDROOMS, SEATING, EMPLOYEES, WATER RECORDS, ETC.)
3 BEDROOMS

SOIL CONDITIONS USED FOR DESIGN PURPOSES

PROFILE	CONDITION
2	A

DEPTH TO LIMITING FACTOR: (18-24)

SIZE RATINGS USED FOR DESIGN PURPOSES
1. ☐ SMALL
2. ☐ MEDIUM
3. ☒ MEDIUM-LARGE
4. ☐ LARGE
5. ☐ EXTRA LARGE

DISPOSAL AREA TYPE/SIZE
1. ☐ BED _____ Sq. Ft.
2. ☒ CHAMBER 500 Sq. Ft. ☐ REGULAR ☐ H-20
3. ☐ TRENCH _____ Linear Ft.
4. ☐ OTHER: _____

DESIGN FLOW: 294 (GALLONS/DAY)

SITE EVALUATOR STATEMENT

On 5/28/87 (date) I conducted a site evaluation for this project and certify that the data reported is accurate. The system I propose is in accordance with the Subsurface Wastewater Disposal Rules.

Site Evaluator Signature — SE# 51 — Date 6/12/87

(Local Plumbing Inspector's Signature if permit is for Seasonal Conversion.)

RECEIVED JUL 1 1987

Town, City, Plantation

LICATION

Street, Road, Subdivision

Owners Name

SITE PLAN

Scale 1" = 50 Ft.

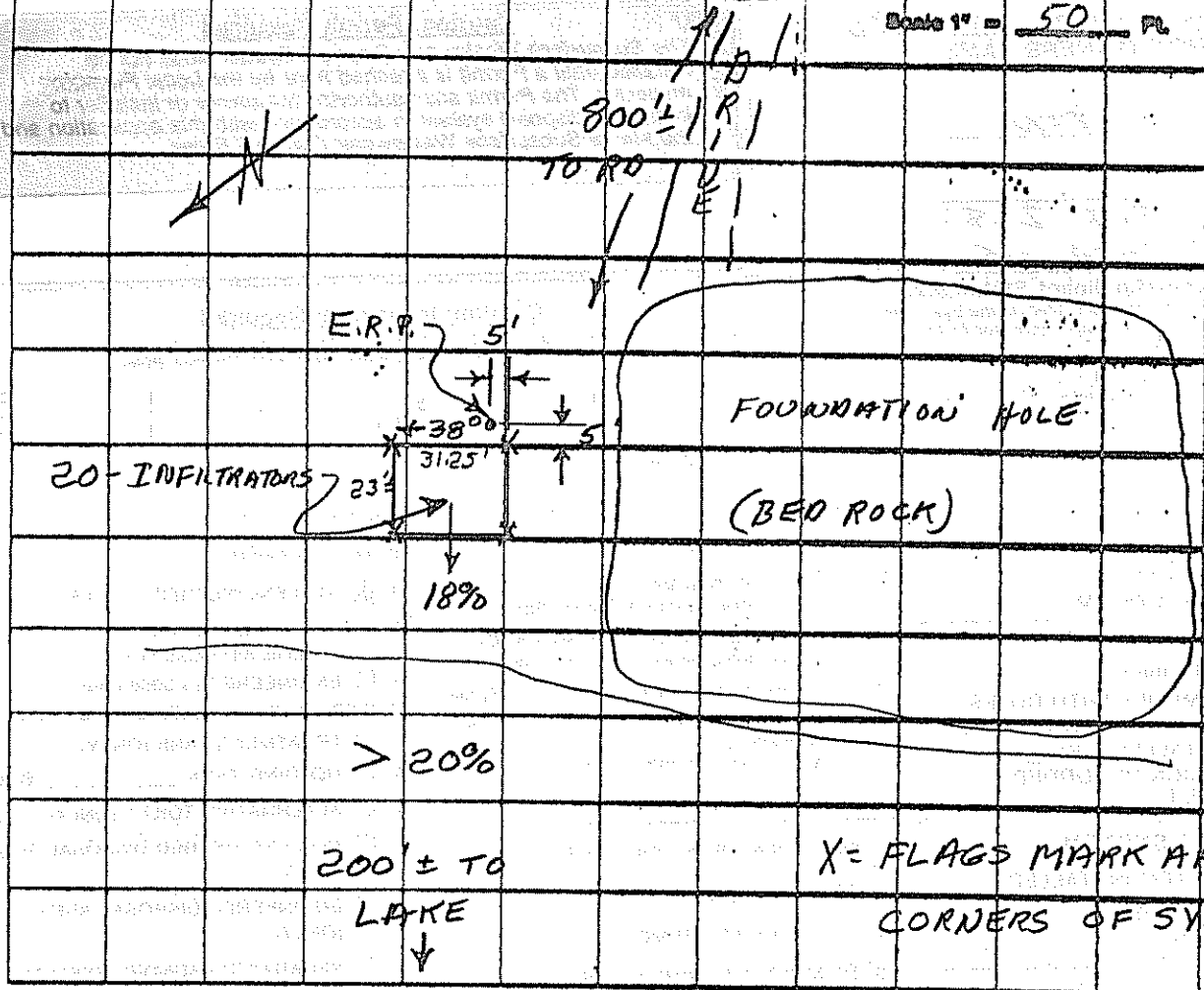

SITE LOCATION PLAN (Atlas Map from Maine Atlas for New System Variance)

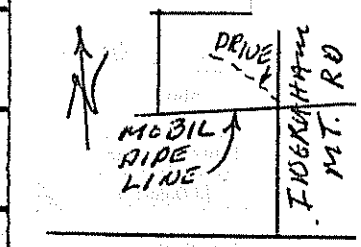

SOIL DESCRIPTION AND CLASSIFICATION (Location of Observation Holes Shown Above)

Observation Hole 1, 2 ☐ Test Pit ☒ Boring

+2 " Depth of Organic Horizon Above Mineral Soil

Depth Below Mineral Soil Surface (Inches)	Texture	Consistency	Color	Mottling
0	S.L.	FRIABLE	B	
5				
10				
15				
20	BEDROCK 18-24 BY SOUNDINGS			
25				
30				
35				
40				
45				
50				

Soil	Classification	Slope	Limiting Factor
2 (Profile)	A (Condition)	18%	18-24 ☐ Ground Water ☐ Restrictive Layer ☒ Bedrock

Observation Hole _____ ☐ Test Pit ☐ Boring

_____ " Depth of Organic Horizon Above Mineral Soil

Depth Below Mineral Soil Surface (Inches)	Texture	Consistency	Color	Mottling
0				
5				
10				
15				
20				
25				
30				
35				
40				
45				
50				

Soil	Classification	Slope	Limiting Factor
(Profile)	(Condition)	%	☐ Ground Water ☐ Restrictive Layer ☐ Bedrock

[signature] #51 6/12/87

Site Evaluator or Professional Engineer (Signature) Date

HHE 200 Rev 4/83

SUBSURFACE WASTEWATER DISPOSAL SYSTEM APPLICATION

Division of Health Engineering

Town, City, Plantation	Street, Road, Subdivision	Owners Name
AUGUSTA	INGRAHAM MT. RD	SIMPSON

SUBSURFACE WASTEWATER DISPOSAL PLAN

Scale 1" = _____ Ft.

A

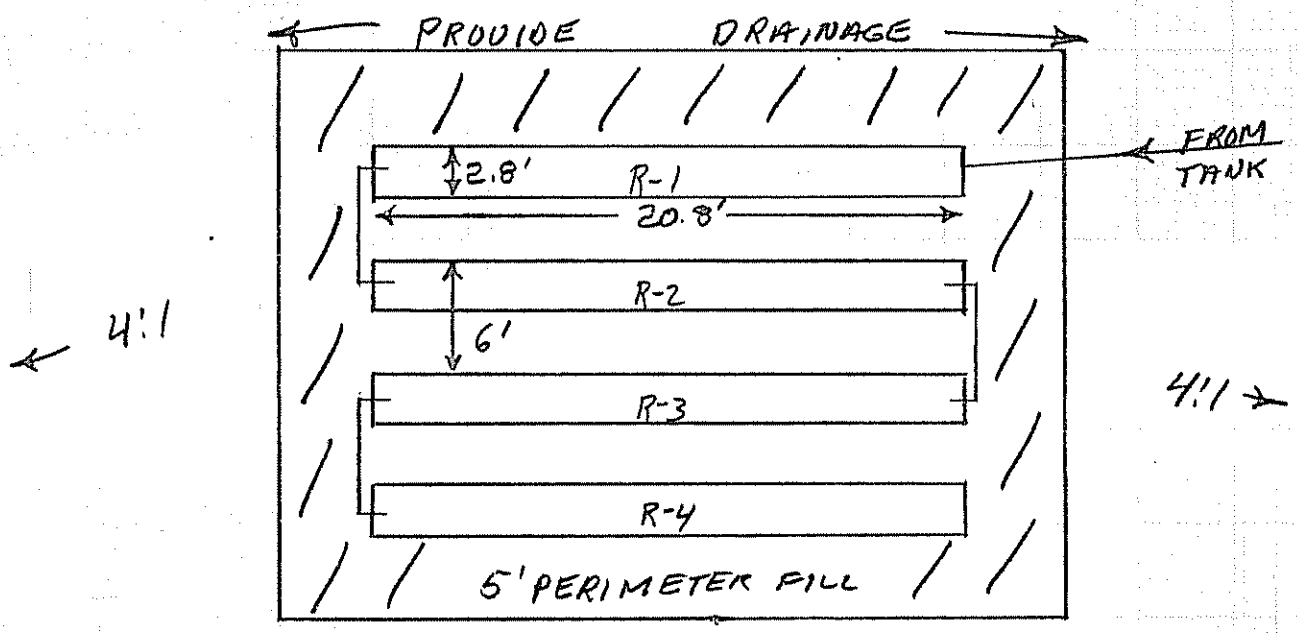

EXTEND FILL ON 4:1 SLOPE

B

FILL REQUIREMENTS		CONSTRUCTION ELEVATIONS		ELEVATION REFERENCE POINT LOCATION & DESCRIPTION
Depth of Fill (Upslope)	27"	Reference Elevation is	0	NAIL IN 8" HEMLOCK
Depth of Fill (Downslope)	42±	Bottom of Disposal Area R-1	-54"	
		Top of Distribution Lines or Chambers	-39"	

① 6" TOPSOIL MINIMUM

② 20 INFILTRATORS, (4 ROWS, 5 EACH)

③ SANDY GRAVEL FILL

BOTTOM ELEVATIONS		
R-1	-54"	39"
R-2	-64"	49"
R-3	-74"	59"
R-4	-84"	69"

B

DISPOSAL AREA CROSS SECTION

Scale:

Vertical: 1 Inch = 5 Ft.

Horizontal: 1 Inch = 10 Ft.

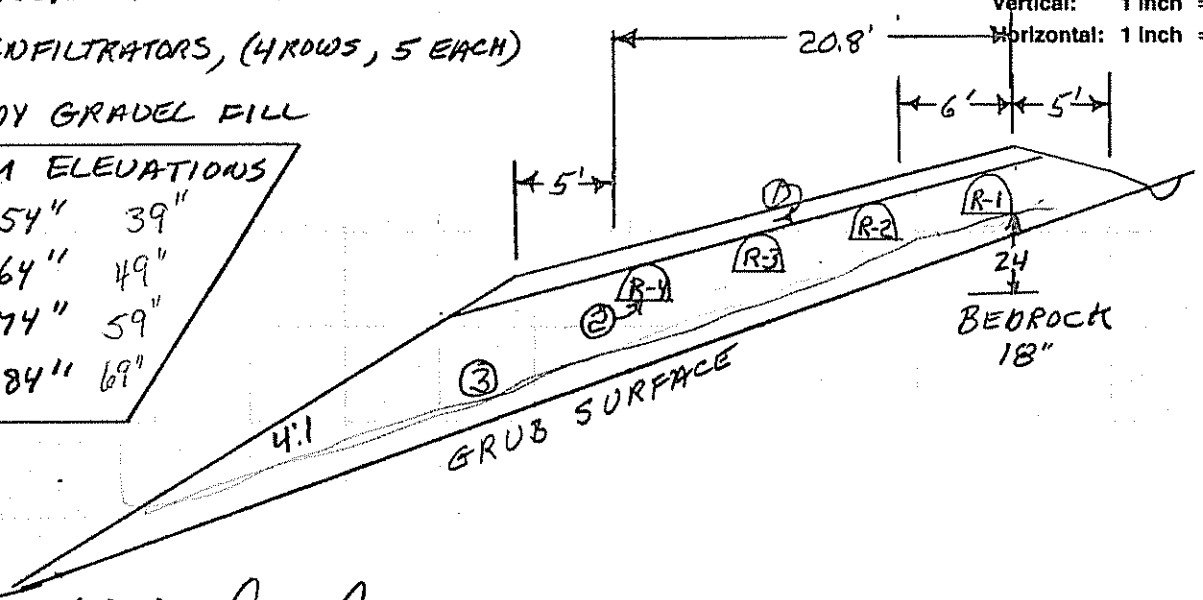

A

Site Evaluator Signature

51
SE#

6/12/87
Date