L. Dostie INSTALLER M2L 108A

SUBSURFACE WASTEWATER DISPOSAL SYSTEM APPLICATION

Department of Human Services
Division of Health Engineering
(207) 289-3826

PROPERTY ADDRESS

Town Or Plantation	Augusta
Street Subdivision Lot #	8 Rod Rd.

PROPERTY OWNERS NAME

Last: Beland First: Robert

Applicant Name:	
Mailing Address of Owner/Applicant (If Different)	R.F.D. #3 Box 1070 Augusta, Me. 04330

Sept 28th AM ERP 52" over TOP OF Lines Should 50 37" 15 Low

AUGUSTA PERMIT # 260 TOWN COPY

Date Permit Issued: 7/2/84 $ 40.00 FEE Double Fee Charged

Robert St Pierre
Local Plumbing Inspector Signature

L.P.I. # 667

Owner/Applicant Statement

I certify that the information submitted is correct to the best of my knowledge and understand that any falsification is reason for the Local Plumbing Inspector to deny a Permit.

Maureen R. Rodrigue 7/2/84
Signature of Owner/Applicant Date

Caution: Inspection Required

I have inspected the installation authorized above and found it to be in compliance with the Subsurface Wastewater Disposal Rules.

[signature] 11/11/84
Local Plumbing Inspector Signature Date Approved

PERMIT INFORMATION

THIS APPLICATION IS FOR:

1. [X] NEW SYSTEM
2. [ ] REPLACEMENT SYSTEM
3. [ ] EXPANDED SYSTEM
4. [ ] SEASONAL CONVERSION
5. [ ] EXPERIMENTAL SYSTEM

THIS APPLICATION REQUIRES:

1. [X] NO RULE VARIANCE REQUIRED
2. [ ] NEW SYSTEM VARIANCE Attach New System Variance Form
   [ ] REPLACEMENT SYSTEM VARIANCE Attach Replacement System Variance Form
   3. [ ] Requires only Local Plumbing Inspector Approval
   4. [ ] Requires both State and Local Plumbing Inspector Approval

INSTALLATION IS

COMPLETE SYSTEM

1. [X] NON-ENGINEERED SYSTEM
2. [ ] PRIMITIVE SYSTEM (Includes Alternative Toilet)
3. [ ] ENGINEERED (+2000 gpd)

INDIVIDUALLY INSTALLED COMPONENTS:

4. [ ] TREATMENT TANK (ONLY)
5. [ ] HOLDING TANK
6. [ ] ALTERNATIVE TOILET (ONLY)
7. [ ] NON-ENGINEERED DISPOSAL AREA (ONLY)
8. [ ] ENGINEERED DISPOSAL AREA (ONLY)
9. [ ] SEPARATED LAUNDRY SYSTEM

IF REPLACEMENT SYSTEM:

YEAR FAILING SYSTEM INSTALLED _____

THE FAILING SYSTEM IS:

1. [ ] BED 3. [ ] TRENCH
2. [ ] CHAMBER 4. [ ] OTHER: _____

DISPOSAL SYSTEM TO SERVE:

1. [X] SINGLE FAMILY DWELLING
2. [ ] MODULAR OR MOBILE HOME
3. [ ] MULTIPLE FAMILY DWELLING
4. [ ] OTHER _____ SPECIFY

SIZE OF PROPERTY	ZONING	TYPE OF WATER SUPPLY
1 Acre	—	Drilled

DESIGN DETAILS (SYSTEM LAYOUT SHOWN ON PAGE 3)

TREATMENT TANK

1. [X] SEPTIC: [ ] Regular [ ] Low Profile
2. [ ] AEROBIC

SIZE: 1,000 GALS.

WATER CONSERVATION

1. [ ] NONE
2. [X] LOW VOLUME TOILET
3. [ ] SEPARATED LAUNDRY SYSTEM
4. [ ] ALTERNATIVE TOILET

SPECIFY: _____

PUMPING

1. [ ] NOT REQUIRED
2. [X] MAY BE REQUIRED (DEPENDING ON TREATMENT TANK LOCATION AND ELEVATION)
3. [ ] REQUIRED

DOSE: 50 GALS.

CRITERIA USED FOR DESIGN FLOW (BEDROOMS, SEATING, EMPLOYEES, WATER RECORDS, ETC.)

3 bedroom

DESIGN FLOW: 300 (GALLONS/DAY)

SOIL CONDITIONS USED FOR DESIGN PURPOSES

PROFILE	CONDITION
5	C

DEPTH TO LIMITING FACTOR: 24

SIZE RATINGS USED FOR DESIGN PURPOSES

1. [ ] SMALL
2. [X] MEDIUM
3. [ ] MEDIUM-LARGE
4. [ ] LARGE
5. [ ] EXTRA LARGE

DISPOSAL AREA TYPE/SIZE

1. [X] BED 800 Sq. Ft.
2. [ ] CHAMBER _____ Sq. Ft. [ ] REGULAR [ ] H-20
3. [ ] TRENCH _____ Linear Ft.
4. [ ] OTHER: _____

SITE EVALUATOR STATEMENT

( ) SITE EVALUATION WAIVED BY LOCAL OPTION)

On 7/11/83 (date) I conducted a site evaluation for this project and certify that the data reported is accurate. The system I propose is in accordance with the Subsurface Wastewater Disposal Rules.

[signature] #51 7/20/83
Site Evaluator or Professional Engineer's Signature SE# / PE# Date

City

* Local Plumbing Inspectors Signature if a Local Site Evaluation Waiver under a Local Option

SUBSURFACE WASTEWATER DISPOSAL SYSTEM APPLICATION — Division of Health Engineering

Town, City, Plantation: Augusta | Street, Road, Subdivision: 8 Rod Rd. | Owners Name: Robert Beland

SITE PLAN — Scale 1" = 50 FT.

SITE LOCATION PLAN (Attach Map from Maine Atlas for New System Variance)

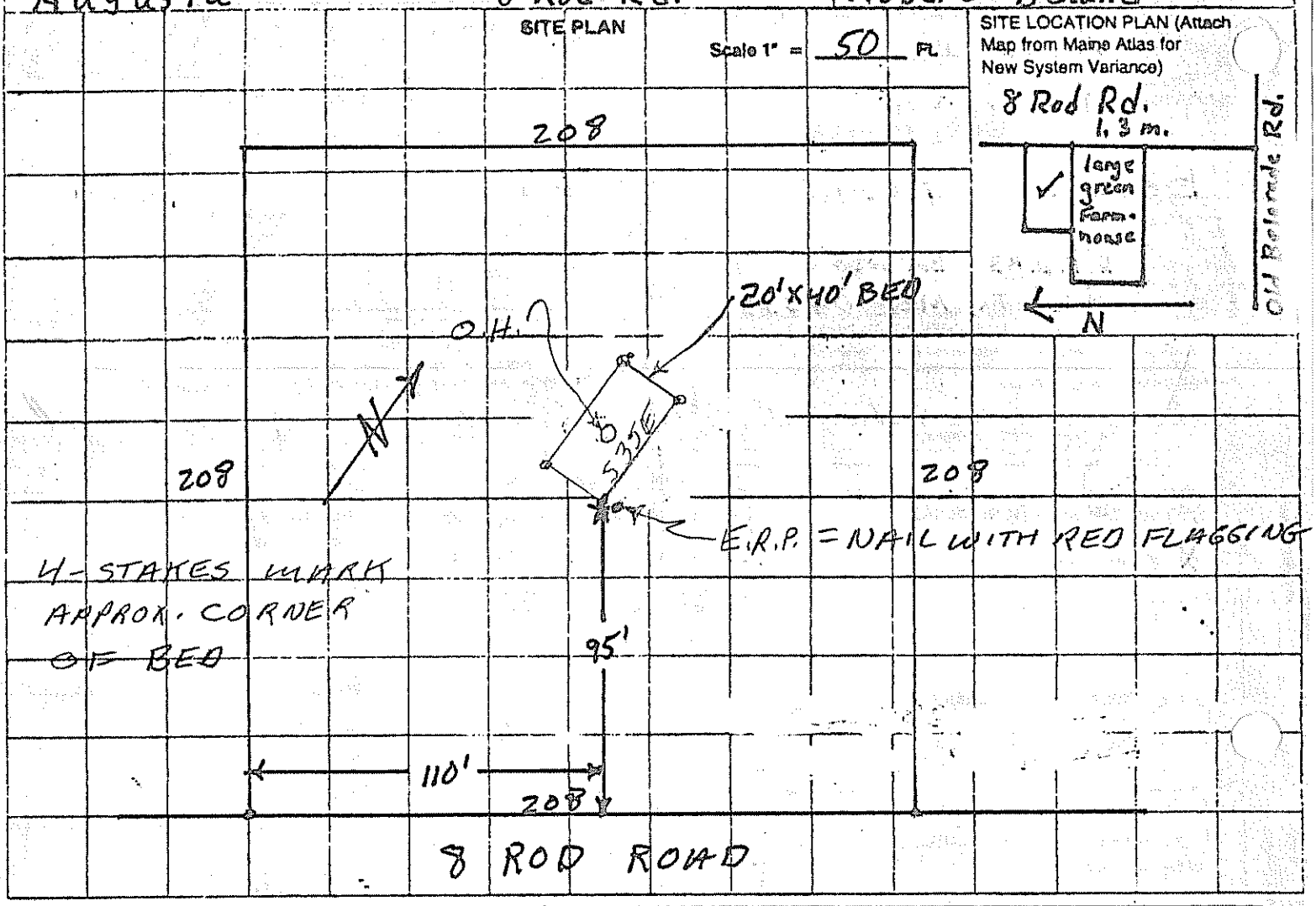

SOIL DESCRIPTION AND CLASSIFICATION (Location of Observation Holes Shown Above)

Observation Hole 1 ☐ Test Pit ☒ Boring

+1 " Depth of Organic Horizon Above Mineral Soil

Depth below mineral soil surface (inches)	Texture	Consistency	Color	Mottling
0–6	L.S.	Friable	R.B.	
6–10				
10–15			Y.B.	
15–20				
20–30		mod. Firm	G.B	24+
30–40				
40–50				

Soil	Classification	Slope	Limiting Factor	
5 (Profile)	C (Condition)	3 %	24	☐ Ground Water ☐ Restrictive Layer ☐ Bedrock

Observation Hole _____ ☐ Test Pit ☐ Boring

_____ " Depth of Organic Horizon Above Mineral Soil

Depth below mineral soil surface (inches)	Texture	Consistency	Color	Mottling
0–6				
6–10				
10–15				
15–20				
20–30				
30–40				
40–50				

Soil	Classification	Slope	Limiting Factor	
(Profile)	(Condition)	%		☐ Ground Water ☐ Restrictive Layer ☐ Bedrock

[signature] #51 Revised 4/17/84 7/20/83

SUBSURFACE WASTEWATER DISPOSAL SYSTEM APPLICATION

Division of Health Engineering

Town, City, Plantation	Street, Road, Subdivision	Owners Name
AUGUSTA	8 ROD ROAD	BELAND

SUBSURFACE WASTEWATER DISPOSAL PLAN

Scale 1" = 20 FT. OR AS SHOWN

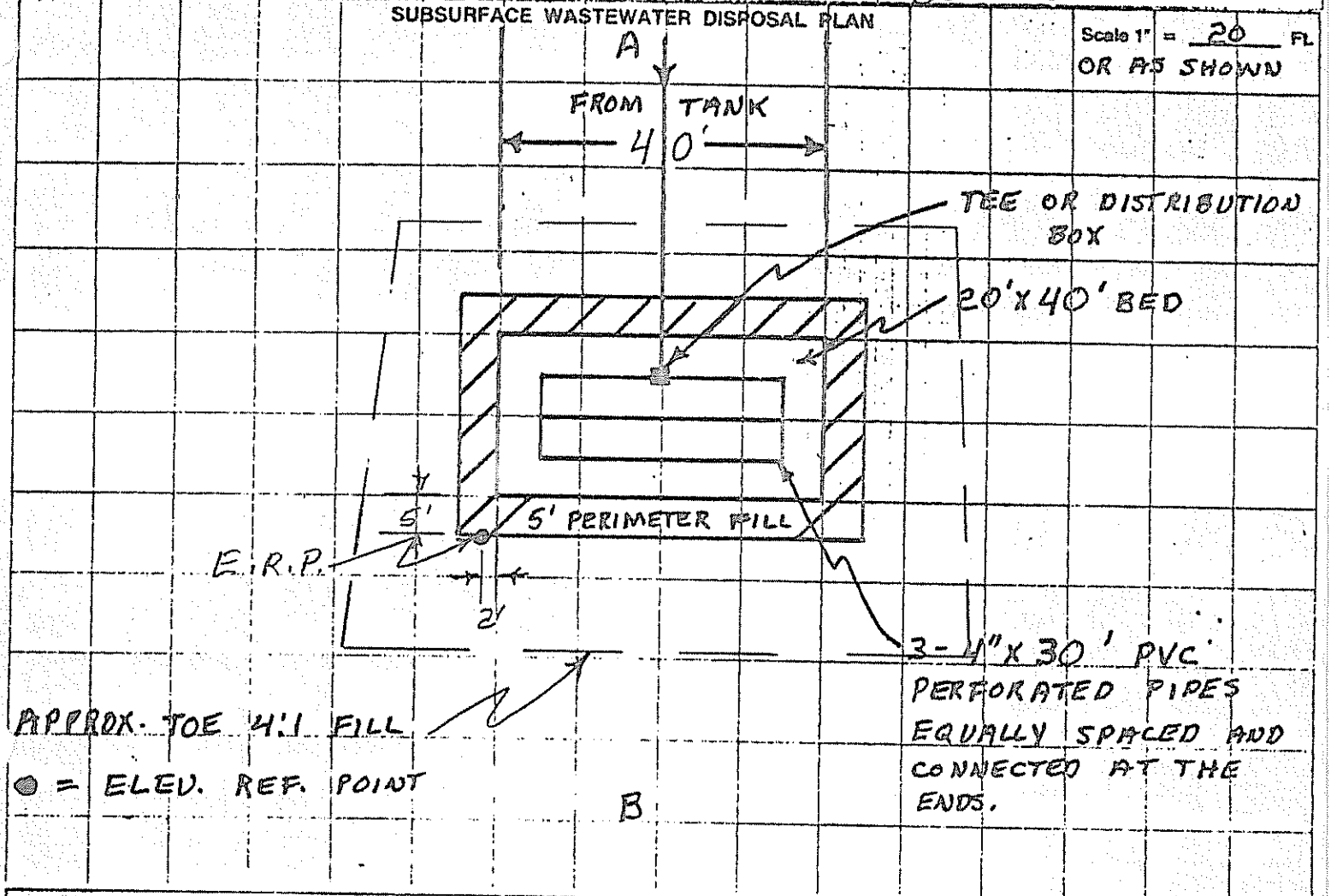

FILL REQUIREMENTS		CONSTRUCTION ELEVATIONS		ELEVATION REFERENCE POINT LOCATION & DESCRIPTION
Depth of Fill (Upslope)	24"	Reference Elevation is	0	NAIL IN 4" POPLAR
Depth of Fill (Downslope)	37"	Bottom of Disposal Area	-48"	
		Top of Distribution Lines or Chambers	-37"	

DISPOSAL AREA CROSS SECTION

Scale:
Vertical: 1 inch = 5 Ft.
Horizontal: 1 inch = 10 Ft.

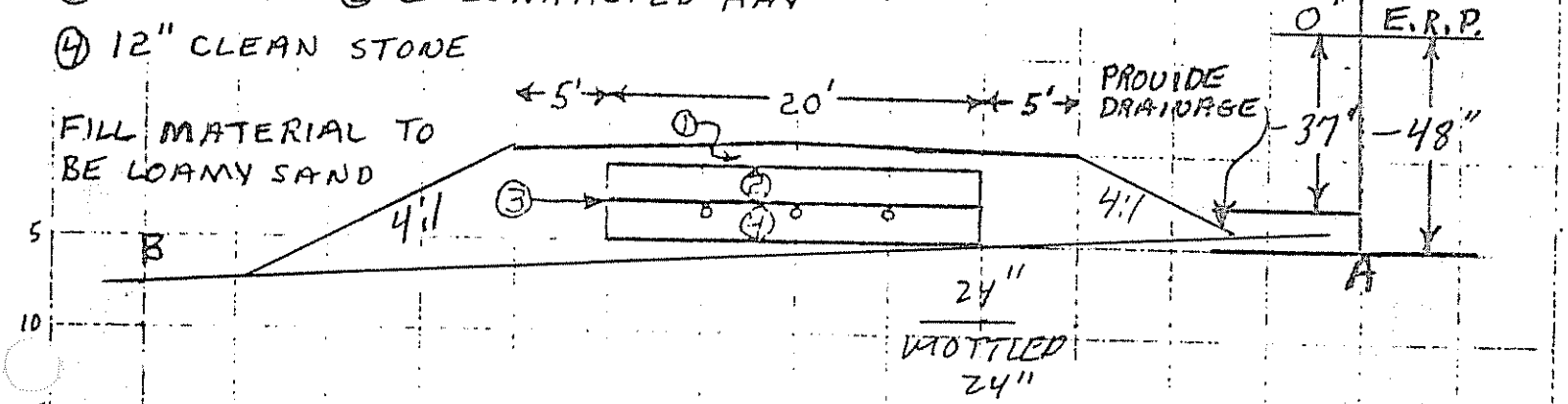

Wm W Richard
Site Evaluator or Professional Engineer's Signature

#51

Revised 4/17/84
Date

Page 3 of 3