SUBSURFACE WASTEWATER DISPOSAL SYSTEM APPLICATION

Maine Department of Human Services
Division of Health Engineering, Station 10
(207)287-5672 FAX (207)287-4172

PROPERTY LOCATION	
City, Town, or Plantation	AUGUSTA
Street or Road	4 MOOSE CIRCLE
Subdivision, Lot #	CUSHNOC ESTATE LOT 219

>> Caution: Permit Required -- Attach in Space Below <<

AUGUSTA 4735 TOWN COPY
Date Permit Issued 7/15/01 $ 100.00 ☐ # Double Fee Fee Charged
Local Plumbing Inspector Signature L.P.I. # 1850

OWNER/APPLICANT INFORMATION	
Name (last, first, MI)	BONEFANT, PAUL ☐ Owner ☐ Applicant
Mailing Address of ■ Owner ☐ Applicant	RR 10 BOX 3240
	AUGUSTA, ME 04330
Daytime Tel. #	622-5013

Municipal Tax Map # 1-A Lot # 15

Owner or Applicant Statement

I state that the information submitted is correct to the best of my knowledge and understand that any falsification is reason for the Department and/or Local Plumbing Inspector to deny a Permit.

Signature of Owner/Applicant _____ Date _____

Caution: Inspection Required

I have inspected the installation authorized above and found it to be in compliance with the Subsurface Wastewater Disposal Rules Application

Local Plumbing Inspector Signature _____ (1st) Date Approved 7/17/01 _____ (2nd) Date Approved

PERMIT INFORMATION

TYPE OF APPLICATION:
1. ■ First Time System
2. ☐ Replacement System
Type Replaced _____
Year Installed _____
3. ☐ Expanded System
a. ☐ Minor Expansion
b. ☐ Major Expansion
4. ☐ Experimental System
5. ☐ Seasonal Conversion

THIS APPLICATION REQUIRES
1. ■ No Rule Variance
2. ☐ First Time System Variance
a. ☐ Local Plumbing Inspector approval
b. ☐ State & Local Plumbing Inspector approval
3. ☐ Replacement System Variance
a. ☐ Local Plumbing Inspector approval
b. ☐ State & Local Plumbing Inspector approval
4. ☐ Minimum Lot Size Variance
5. ☐ Seasonal Conversion Variance

DISPOSAL SYSTEM COMPONENT(S)
1. ■ Complete Non-engineered System
2. ☐ Primitive System (graywater & alt. toilet)
3. ☐ Alternative Toilet, specify _____
4. ☐ Non-Engineered Treatment Tank (only)
5. ☐ Holding Tank _____ gallons
6. ☐ Non-engineered Disposal Field (only)
7. ☐ Separated Laundry System
8. ☐ Complete Engineered System (2000 gpd or more)
9. ☐ Engineered Treatment Tank (only)
10. ☐ Engineered Disposal Field (only)
11. ☐ Pretreatment, specify:
12. ☐ Miscellaneous components

SIZE OF PROPERTY
0.97 ☐ sq. ft. ■ acres

SHORELAND ZONING
☐ Yes ■ No

DISPOSAL SYSTEM TO SERVE:
1. ■ Single Family Dwelling Unit, No. of Bedrooms: 3
2. ☐ Multiple Family Dwelling Unit, No. of Units: _____
3. ☐ Other _____ SPECIFY

TYPE OF WATER SUPPLY
1. ■ Drilled Well 2. ☐ Dug Well 3. ☐ Private
4. ☐ Public 5. ☐ Other

DESIGN DETAILS (SYSTEM LAYOUT SHOWN ON PAGE 3)

TREATMENT TANK
1. ■ Concrete
a. ■ Regular
b. ☐ Low Profile
2. ☐ Plastic
3. ☐ Other _____
CAPACITY 1000 gallons

DISPOSAL FIELD TYPE & SIZE
1. ■ Stone Bed 2. ☐ Stone Trench
3. ☐ Proprietary Device
a. ☐ Cluster Array c. ☐ Linear
b. ☐ Regular load d. ☐ H-20 load
4. ☐ Other _____
SIZE 1000 ■ sq. ft. ☐ lin. ft.

GARBAGE DISPOSAL UNIT
1. ■ No 3. ☐ Maybe
2. ☐ Yes >> Specify one below:
a. ☐ Multi-compartment Tank
b. ☐ Tanks in Series
c. ☐ Increase in Tank Capacity
d. ☐ Filter on Tank Outlet

DESIGN FLOW
270 gallons per day
BASED ON:
1. ■ Table 501.1 (dwelling unit(s)
2. ☐ Table 501.2 (other facilities)
SHOW CALCULATIONS
-for other facilities-
3. ☐ Section 503.0 (meter readings)
ATTACH WATER-METER DATA

SOIL DATA & DESIGN CLASS
PROFILE CONDITION DESIGN
3 / C / 1
at Observation Hole # TP-1
Depth 21 " Elevation _____ "
OF MOST LIMITING SOIL FACTOR

DISPOSAL FIELD SIZING
1. ☐ Small - 2.0 sq. ft./gpd
2. ☐ Medium - 2.6 sq. ft./gpd
3. ■ Medium-Large - 3.3 sq. ft./gpd
4. ☐ Large - 4.1 sq. ft./gpd
5. ☐ Extra-Large - 5.0 sq. ft./gpd

PUMPING
1. ■ Not Required
2. ☐ May Be Required
3. ☐ Required>> Specify only for engineered or experimental systems
DOSE _____ gallons

SITE EVALUATOR'S STATEMENT

I certify that on 7/16/2001 (date) I completed a site evaluation on this property and state that the data reported are accurate and that the proposed system is in compliance with the State of Maine Subsurface Wastewater Disposal Rules (10-144A CMR 241).

William P Brown — Site Evaluator Signature
188 — SE#
7/17/2001 — Date
WILLIAM P BROWN — Site Evaluator Name Printed
293-2110 — Telephone #

SUBSURFACE WASTEWATER DISPOSAL SYSTEM APPLICATION

Department of Human Services
Division of Health Engineering
(207) 287-5672 FAX 207 287-4172

Town, City, Plantation	Street, Road, Subdivision	Owners Name
AUGUSTA	MOOSE CIRCLE LOT 219	PAUL BONEFANT

SITE PLAN — Scale 1" = 100 Ft.

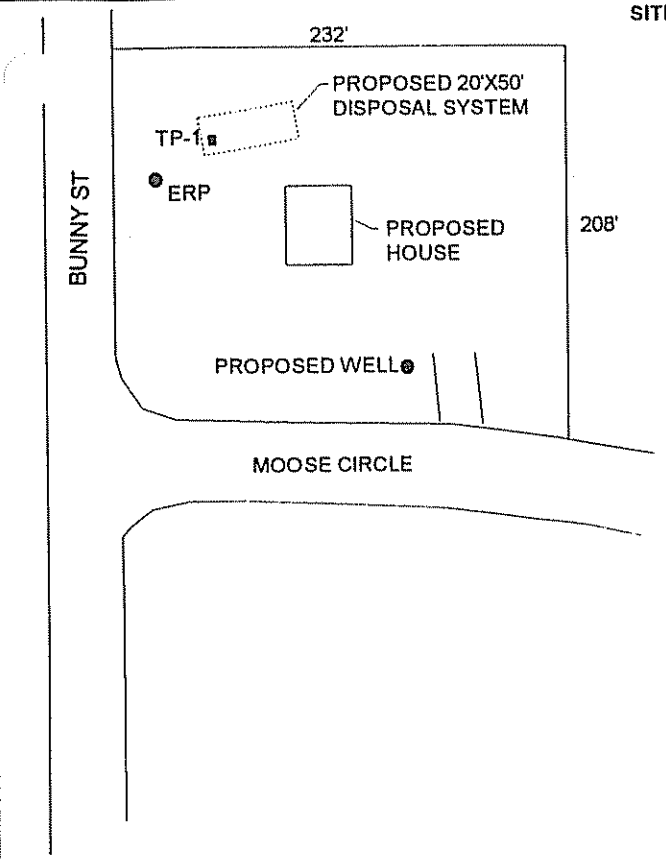

SITE LOCATION PLAN (Map from Maine Atlas recommended)

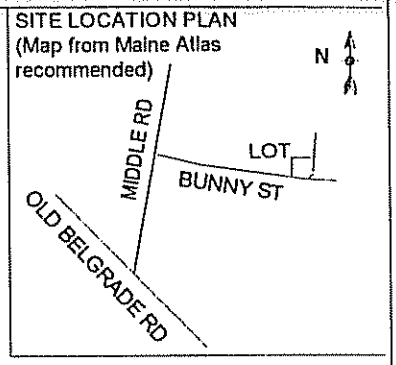

ERP TO TP-1 = 23'

WELL MUST BE LOCATED AT LEAST 100 FT FROM DISPOSAL SYSTEM AND AT LEAST 50 FT FROM NEW ONE-PIECE SEPTIC TANK

HOUSE WITH FULL BASEMENT TO BE AT LEAST 20 FT FROM SYSTEM

SOIL DESCRIPTION AND CLASSIFICATION (Location of Observation Holes Shown Above)

Observation Hole TP-1 ■ Test Pit ☐ Boring

0 " Depth of Organic Horizon Above Mineral Soil

DEPTH BELOW MINERAL SOIL SURFACE (Inches)

Depth	Texture	Consistancy	Color	Mottling
0–10	LOAMY SAND	FRIABLE	ORANGE BROWN	
10–20				NONE
20–30		FIRM	LIGHT BROWN OLIVE BRN	COMMON
30–40				
40–50				

Soil Classification	Slope	Limiting Factor
3 (Profile) C (Condition)	0-5 %	21 " ■ Ground Water ☐ Restrictive Layer ☐ Bedrock ☐ Pit Depth

Observation Hole _____ ☐ Test Pit ☐ Boring

" Depth of Organic Horizon Above Mineral Soil

DEPTH BELOW MINERAL SOIL SURFACE (Inches)

Depth	Texture	Consistancy	Color	Mottling
0–10				
10–20				
20–30				
30–40				
40–50				

Soil Classification	Slope	Limiting Factor
Profile / Condition	%	" ☐ Ground Water ☐ Restrictive Layer ☐ Bedrock ☐ Pit Depth

WILLIAM P BROWN *William P Brown* — Site Evaluator Signature

188 — SE #

7/17/2001 — Date

SUBSURFACE WASTEWATER DISPOSAL SYSTEM APPLICATION

Department of Human Services
Division of Health Engineering

Town, City, Plantation	Street, Road, Subdivision	Owners Name
AUGUSTA	BUNNY STREET (LOT 219)	PAUL BONEFANT

SUBSURFACE WASTEWATER DISPOSAL PLAN

Scale 1" 20' Ft.

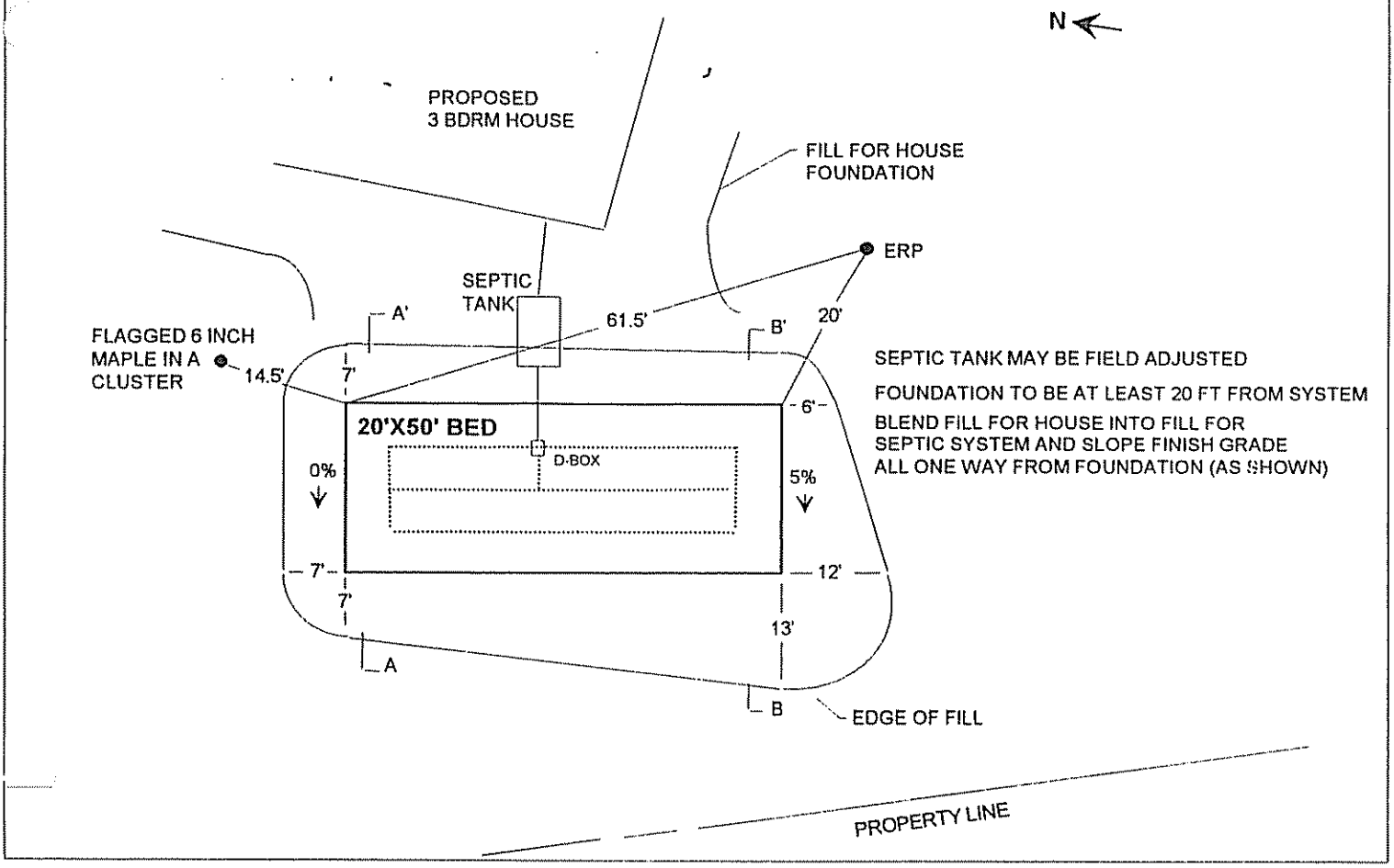

SEPTIC TANK MAY BE FIELD ADJUSTED

FOUNDATION TO BE AT LEAST 20 FT FROM SYSTEM

BLEND FILL FOR HOUSE INTO FILL FOR SEPTIC SYSTEM AND SLOPE FINISH GRADE ALL ONE WAY FROM FOUNDATION (AS SHOWN)

FILL REQUIREMENTS

Depth of Fill (Upslope)	15 "
Depth of Fill (Downslope)	15-27 "

CONSTRUCTION ELEVATIONS

Reference Elevation is	00"
Bottom of Disposal Area	-48"
Top of distribution Lines or Chambers	-37"

ELEVATION REFERENCE POINT LOCATION & DESCRIPTION

FLAGGED NAIL IN 3 INCH WHITE BIRCH TREE, 3 FT ABOVE GRND

DISPOSAL AREA CROSS SECTION

Scale:

Vertical: 1 inch = 5 Ft.
Horizontal: 1 inch = 10 Ft.

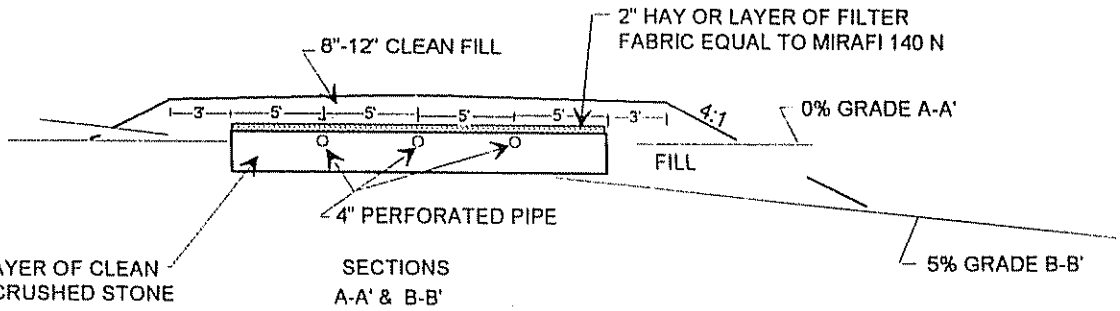

SCARIFY ENTIRE FILL AREA
MIX 4 INCHES OF FILL MATERIAL THOROUGHLY WITH EXISTING SOIL TO FORM A TRANSITION ZONE (ACCORDING TO CHAPTER 8, PLUMBING CODE)
FILL SHALL BE GRAVELLY COARSE SAND
SLOPE FINISH GRADE FROM CENTER AT 3% OR ALL ONE-WAY FROM FOUNDATION
LOAM, SEED, MULCH DISTURBED AREAS

WILLIAM P BROWN *William P Brown*	188	7/17/2001	
Site Evaluator Signature	SE #	Date	