SUBSURFACE WASTEWATER DISPOSAL SYSTEM APPLICATION

Maine Department of Human Services
Division of Health Engineering, 10SHS
(207)287-5672 FAX (207)287-3165

PROPERTY LOCATION

>> CAUTION: PERMIT REQUIRED -- ATTACH IN SPACE BELOW <<

City, Town, or Plantation	AUGUSTA
Street or Road	76 BUNNY STREET LOT # 213
Subdivision, Lot #	

AUGUSTA 5389 TOWN CODE
Date Permit Issued: 9-29-04 $ 100.00 FEE ☐ If Double Fee Charged
Local Plumbing Inspector Signature L.P.I. # 850

OWNER/APPLICANT INFORMATION

Name (last, first, MI)	BONENFANT, PAUL ■ Owner ☐ Applicant
Mailing Address of Owner/Applicant	92 OLD BELGRADE ROAD AUGUSTA, ME 04330
Daytime Tel. #	622-5013

Municipal Tax Map # 1A Lot # 9

OWNER OR APPLICANT STATEMENT
I state that the information submitted is correct to the best of my knowledge and understand that any falsification is reason for the Department and/or Local Plumbing Inspector to deny a Permit.
Signature of Owner/Applicant — Date 9/28/04

CAUTION: INSPECTION REQUIRED
I have inspected the installation authorized above and found it to be in compliance with the Subsurface Wastewater Disposal Rules Application
Local Plumbing Inspector Signature — (1st) Date Approved — (2nd) Date Approved

PERMIT INFORMATION

TYPE OF APPLICATION
■ 1. First Time System
☐ 2. Replacement System
Type replaced ____
Year installed ____
☐ 3. Expanded System
☐ a. Minor Expansion
☐ b. Major Expansion
☐ 4. Experimental System
☐ 5. Seasonal Conversion

THIS APPLICATION REQUIRES
■ 1. No Rule Variance
☐ 2. First Time System Variance
☐ a. Local Plumbing Inspector approval
☐ b. State & Local Plumbing Inspector approval
☐ 3. Replacement System Variance
☐ a. Local Plumbing Inspector approval
☐ b. State & Local Plumbing Inspector approval
☐ 4. Minimum Lot Size Variance
☐ 5. Seasonal Conversion Permit

DISPOSAL SYSTEM COMPONENTS
■ 1. Complete Non-engineered System
☐ 2. Primitive System (graywater & alt. toilet)
☐ 3. Alternative Toilet, specify ____
☐ 4. Non-Engineered Treatment Tank (only)
☐ 5. Holding Tank, ____ gallons
☐ 6. Non-engineered Disposal Field (only)
☐ 7. Separated Laundry System
☐ 8. Complete Engineered System (2000 gpd or more)
☐ 9. Engineered Treatment Tank (only)
☐ 10. Engineered Disposal Field (only)
☐ 11. Pretreatment, specify: ____
☐ 12. Miscellaneous Components

SIZE OF PROPERTY
1.0 ☐ sq. ft. ■ acres

SHORELAND ZONING
☐ Yes ■ No

DISPOSAL SYSTEM TO SERVE:
■ 1. Single Family Dwelling Unit, No. of Bedrooms: 3
☐ 2. Multiple Family Dwelling Unit, No. of Units: ____
☐ 3. Other ____ (specify)
Current Use ☐ Seasonal ☐ Year Round ■ Undeveloped

TYPE OF WATER SUPPLY
■ 1. Drilled Well ☐ 2. Dug Well ☐ 3. Private
☐ 4. Public ☐ 5. Other

DESIGN DETAILS (SYSTEM LAYOUT SHOWN ON PAGE 3)

TREATMENT TANK
■ 1. Concrete
■ a. Regular
☐ b. Low Profile (IF NEEDED)
☐ 2. Plastic
☐ 3. Other ____
CAPACITY 1000 GAL.

DISPOSAL FIELD TYPE & SIZE
■ 1. Stone Bed ☐ 2. Stone Trench
☐ 3. Proprietary Device
☐ a. cluster array ☐ c. Linear
☐ b. regular load ☐ d. H-20 load
☐ 4. Other ____
SIZE 1000 ■ sq. ft. ☐ lin. ft.

GARBAGE DISPOSAL UNIT
1. ■ No 3. ☐ Maybe
2. ☐ Yes>>Specify one below:
☐ a. multi-compartment tank
☐ b. ____ tanks in series
☐ c. increase in tank capacity
☐ d. Filter on Tank Outlet

DESIGN FLOW
270 gallons per day
BASED ON:
■ 1. Table 501.1 (dwelling unit(s))
☐ 2. Table 501.2 (other facilities)
SHOW CALCULATIONS -for other facilities-
☐ 3. Section 503.0 (meter readings)
ATTACH WATER METER DATA

SOIL DATA & DESIGN CLASS
PROFILE CONDITION DESIGN
3 / C / 1
at Observation Hole # TP-1
Depth 18 "
of Most Limiting Soil Factor

DISPOSAL FIELD SIZING
1. ☐ Small - 2.0 sq. ft./gpd
2. ☐ Medium - 2.6 sq. ft./gpd
3. ■ Medium-Large - 3.3 sq. ft./gpd
4. ☐ Large - 4.1 sq. ft./gpd
5. ☐ Extra-Large - 5.0 sq. ft./gpd

EFFLUENT/EJECTOR PUMP
1. ■ Not Required
2. ☐ May Be Required
3. ☐ Required>> Specify only for engineered or experimental systems
DOSE ____ gallons

SITE EVALUATOR'S STATEMENT

I certify that on 9/22/04 (date) I completed a site evaluation on this property and state that the data reported are accurate and that the proposed system is in compliance with the State of Maine Subsurface Wastewater Disposal Rules (10-144A CMR 241).

William P Brown — Site Evaluator Signature
188 — SE#
9/22/2004 — Date
WILLIAM P BROWN — Site Evaluator Name Printed
293-2110 — Telephone Number
E-mail Address

Note: Changes to or deviations from the design should be confirmed with the Site Evaluator.

SUBSURFACE WASTEWATER DISPOSAL SYSTEM APPLICATION

Maine Department of Human Services
Division of Health Engineering, Station 10
(207) 287-5672 FAX 207 287-4165

Town, City, Plantation	Street, Road, Subdivision	Owner or Applicant Name
AUGUSTA	BUNNY STREET LOT 213	PAUL BONENFANT

SITE PLAN — Scale 1" = 50 Ft.

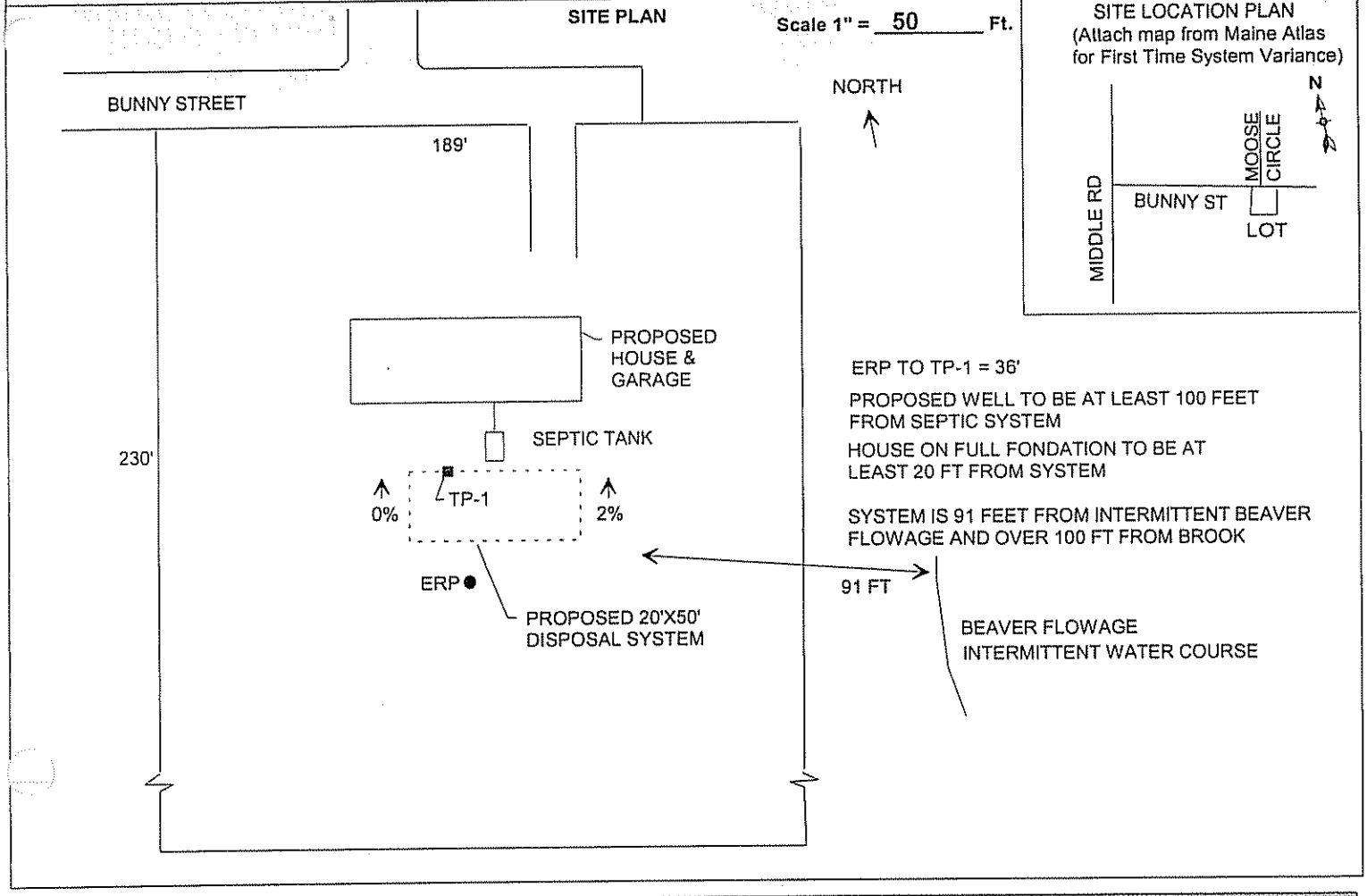

SOIL PROFILE DESCRIPTION AND CLASSIFICATION (Location of Observation Holes Shown Above)

Observation Hole # TP-1 ■ Test Pit ☐ Boring

0 " Depth of organic horizon above mineral soil

Depth below mineral soil surface (inches)	Texture	Consistancy	Color	Mottling
0–10	LOAMY SAND	FRIABLE	LIGHT BROWN	
10–30				NONE ~~COMMON~~
30–50		FIRM	OLIVE BROWN	

Soil Classification		Slope	Limiting Factor	
3 Profile	C Condition	0-2 % Percent	18 " Depth	■ Groundwater ☐ Restrictive Layer ☐ Bedrock

Observation Hole # _____ ☐ Test Pit ☐ Boring

_____ " Depth of organic horizon above mineral soil

Depth below mineral soil surface (inches)	Texture	Consistancy	Color	Mottling
0–50				

Soil Classification		Slope	Limiting Factor	
Profile	Condition	% Percent	" Depth	☐ Groundwater ☐ Restrictive Layer ☐ Bedrock

WILLIAM P BROWN *William P Brown*
Site Evaluator Signature

188
SE #

9/22/2004
Date

SUBSURFACE WASTEWATER DISPOSAL SYSTEM APPLICATION

Department of Human Services
Division of Health Engineering

Town, City, Plantation	Street, Road, Subdivision	Owners Name
AUGUSTA	BUNNY STREET LOT 213	PAUL BONENFANT

SUBSURFACE WASTEWATER DISPOSAL PLAN

Scale 1" 20' Ft.

SEPTIC TANK MAY BE FIELD ADJUSTED
AT LEAST 8 FT FROM HOUSE

LOCATE WELL AT LEAST 100 FEET FROM DISPOSAL SYSTEM
LOCATE HOUSE AT LEAST 20 FEET FROM DISPOSAL SYSTEM

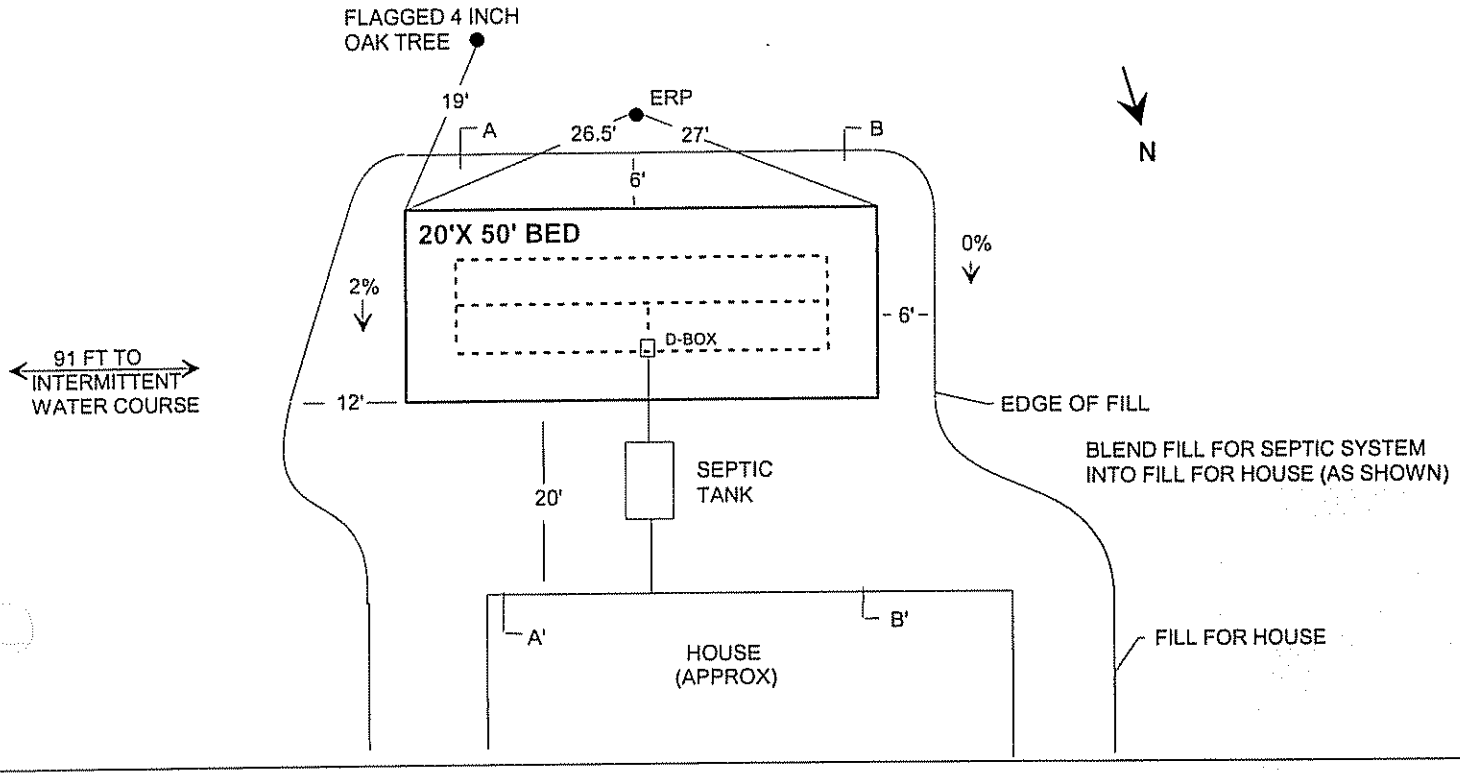

FILL REQUIREMENTS		CONSTRUCTION ELEVATIONS		ELEVATION REFERENCE POINT
Depth of Fill (Upslope)	18 "	Finish Grade Elevation	VARIES	Location and Description
Depth of Fill (Downslope)	18-23 "	Top of Distribution Pipe or Proprietary device	-48"	FLAGGED NAIL IN 4 INCH OAK TREE, 3 FEET ABOVE GROUND
		Bottom of Disposal Area	-59"	Reference Elevation is 00"

DISPOSAL AREA CROSS SECTION

Scale:
Vertical: 1 inch = 5 Ft.
Horizontal: 1 inch = 10 Ft.

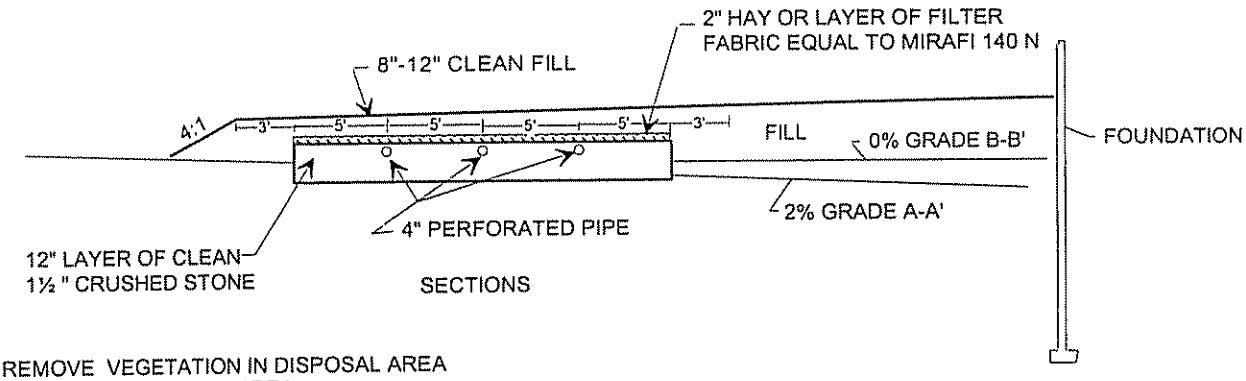

REMOVE VEGETATION IN DISPOSAL AREA
SCARIFY ENTIRE FILL AREA
MIX 4 INCHES OF FILL MATERIAL THOROUGHLY WITH EXISTING SOIL TO FORM TRANSITION ZONE (ACCORDING TO CHAPTER 8, PLUMBING CODE)
ALL FILL SHALL BE GRAVELLY COARSE SAND
CROWN FINISH GRADE FROM CENTER AT 3%
OR SLOPE ALL ONE-WAY FROM FOUNDATION (AS SHOWN)
LOAM, SEED, MULCH DISTURBED AREAS

WILLIAM P BROWN *William P Brown* 188 9/22/2004
Site Evaluator Signature SE # Date