PIF 8/24/15

SUBSURFACE WASTEWATER DISPOSAL SYSTEM APPLICATION

Maine Dept.Health & Human Services
Div of Environmental Health , 11 SHS
(207) 287-5672 Fax: (207) 287-4172

PROPERTY LOCATION

City, Town, or Plantation	AUGUSTA
Street or Road	PEACEFULL PLACE
Subdivision, Lot #	1/1 L90

OWNER/APPLICANT INFORMATION

Name (last, first, MI)	GAGNE, DAN ☑ Owner ☑ Applicant
Mailing Address of Owner/Applicant	266 MIDDLE RD. AUGUSTA, ME. 04330
Daytime Tel. #	

OWNER OR APPLICANT STATEMENT
I state and acknowledge that the information submitted is correct to the best of my knowledge and understand that any falsification is reason for the Department and/or Local Plumbing Inspector to deny a Permit.

Signature of Owner or Applicant — Date: 8-20-15

>> CAUTION: LPI APPROVAL REQUIRED <<

AUGUSTA PERMIT #7108 TOWN COPY

Date Permit Issued: 8/21/15

$ 250.00 fee

15.00

LPI # 850

I have inspected the installation authorized above and found it to be in compliance with the Subsurface Wastewater Disposal Rules Application.

(1st) date approved

Local Plumbing Inspector Signature — (2nd) date approved

PERMIT INFORMATION

TYPE OF APPLICATION
- ☑ 1. First Time System
- ☐ 2. Replacement System
  - Type replaced: ____
  - Year installed: ____
- ☐ 3. Expanded System
  - ☐ a. <25% Expansion
  - ☐ b. ≥25% Expansion
- ☐ 4. Experimental System
- ☐ 5. Seasonal Conversion

THIS APPLICATION REQUIRES
- ☑ 1. No Rule Variance
- ☐ 2. First Time System Variance
  - ☐ a. Local Plumbing Inspector Approval
  - ☐ b. State & Local Plumbing Inspector Approval
- ☐ 3. Replacement System Variance
  - ☐ a. Local Plumbing Inspector Approval
  - ☐ b. State & Local Plumbing Inspector Approval
- ☐ 4. Minimum Lot Size Variance
- ☐ 5. Seasonal Conversion Permit

DISPOSAL SYSTEM COMPONENTS
- ☑ 1. Complete Non-engineered System
- ☐ 2. Primitive System (graywater & alt. toilet)
- ☐ 3. Alternative Toilet, specify: ____
- ☐ 4. Non-engineered Treatment Tank (only)
- ☐ 5. Holding Tank, ____ gallons
- ☐ 6. Non-engineered Disposal Field (only)
- ☐ 7. Separated Laundry System
- ☐ 8. Complete Engineered System (2000 gpd or more)
- ☐ 9. Engineered Treatment Tank (only)
- ☐ 10. Engineered Disposal Field (only)
- ☐ 11. Pre-treatment, specify: ____
- ☐ 12. Miscellaneous Components

SIZE OF PROPERTY
1.5± ☐ SQ. FT. ☑ ACRES

SHORELAND ZONING
☐ Yes ☑ No

DISPOSAL SYSTEM TO SERVE
- ☑ 1. Single Family Dwelling Unit, No. of Bedrooms: 2
- ☐ 2. Multiple Family Dwelling, No. of Units: ____
- ☐ 3. Other: ____ (specify)

Current Use ☐ Seasonal ☑ Year Round ☐ Undeveloped

TYPE OF WATER SUPPLY
☑ 1. Drilled Well ☐ 2. Dug Well ☐ 3. Private ☐ 4. Public ☐ 5. Other

DESIGN DETAILS (SYSTEM LAYOUT SHOWN ON PAGE 3)

TREATMENT TANK
- ☑ 1. Concrete
  - ☑ a. Regular
  - ☐ b. Low Profile
- ☐ 2. Plastic
- ☐ 3. Other: ____

CAPACITY: 1,000 GAL.

DISPOSAL FIELD TYPE & SIZE
- ☑ 1. Stone Bed ☐ 2. Stone Trench
- ☐ 3. Proprietary Device
  - ☐ a. cluster array ☐ c. Linear
  - ☐ b. regular load ☐ d. H-20 load
- ☐ 4. Other: ____

SIZE: 600 ☑ sq. ft. ☐ lin. ft.

GARBAGE DISPOSAL UNIT
☐ 1. No ☐ 2. Yes ☑ 3. Maybe

If Yes or Maybe, specify one below:
- ☐ a. multi-compartment tank
- ☐ b. ____ tanks in series
- ☐ c. increase in tank capacity
- ☑ d. Filter on Tank Outlet

DESIGN FLOW
180 gallons per day

BASED ON:
- ☑ 1. Table 4A (dwelling unit(s))
- ☐ 2. Table 4C(other facilities)
  SHOW CALCULATIONS for other facilities
- ☐ 3. Section 4G (meter readings)
  ATTACH WATER METER DATA

SOIL DATA & DESIGN CLASS
PROFILE CONDITION: 3 / C

at Observation Hole # 1

Depth 24"

of Most Limiting Soil Factor

DISPOSAL FIELD SIZING
- ☐ 1. Medium—2.6 sq. ft. / gpd
- ☑ 2. Medium—Large 3.3 sq. ft / gpd
- ☐ 3. Large—4.1 sq. ft. / gpd
- ☐ 4. Extra Large—5.0 sq. ft. / gpd

EFFLUENT/EJECTOR PUMP
- ☑ 1. Not Required
- ☐ 2. May Be Required
- ☐ 3. Required

Specify only for engineered systems:
DOSE: ____ gallons

LATITUDE AND LONGITUDE
at center of disposal area

Lat. 44 d 22.11 m 090 s

Lon. 69 d 47.06 m 508 s

if g.p.s, state margin of error: 10

SITE EVALUATOR STATEMENT

I certify that on 8/09/15 (date) I completed a site evaluation on this property and state that the data reported are accurate and that the proposed system is in compliance with the State of Maine Subsurface Wastewater Disposal Rules (10-144A CMR 241).

Site Evaluator Signature	256 SE #	8/11/15 Date
JOHN PHILBRICK Site Evaluator Name Printed	547-3732 Telephone Number	E-mail Address

Note : Changes to or deviations from the design should be confirmed with the Site Evaluator.

SUBSURFACE WASTEWATER DISPOSAL SYSTEM APPLICATION

Maine Dept. Health & Human Services
Division of Environmental Health
(207) 287-5672 Fax: (207) 287-3165

Town, City, Plantation: AUGUSTA

Street, Road, Subdivision: PEACEFULL PLACE

Owner's Name: DAN GAGNE

SITE PLAN

Scale 1" = 50' ft. or as shown

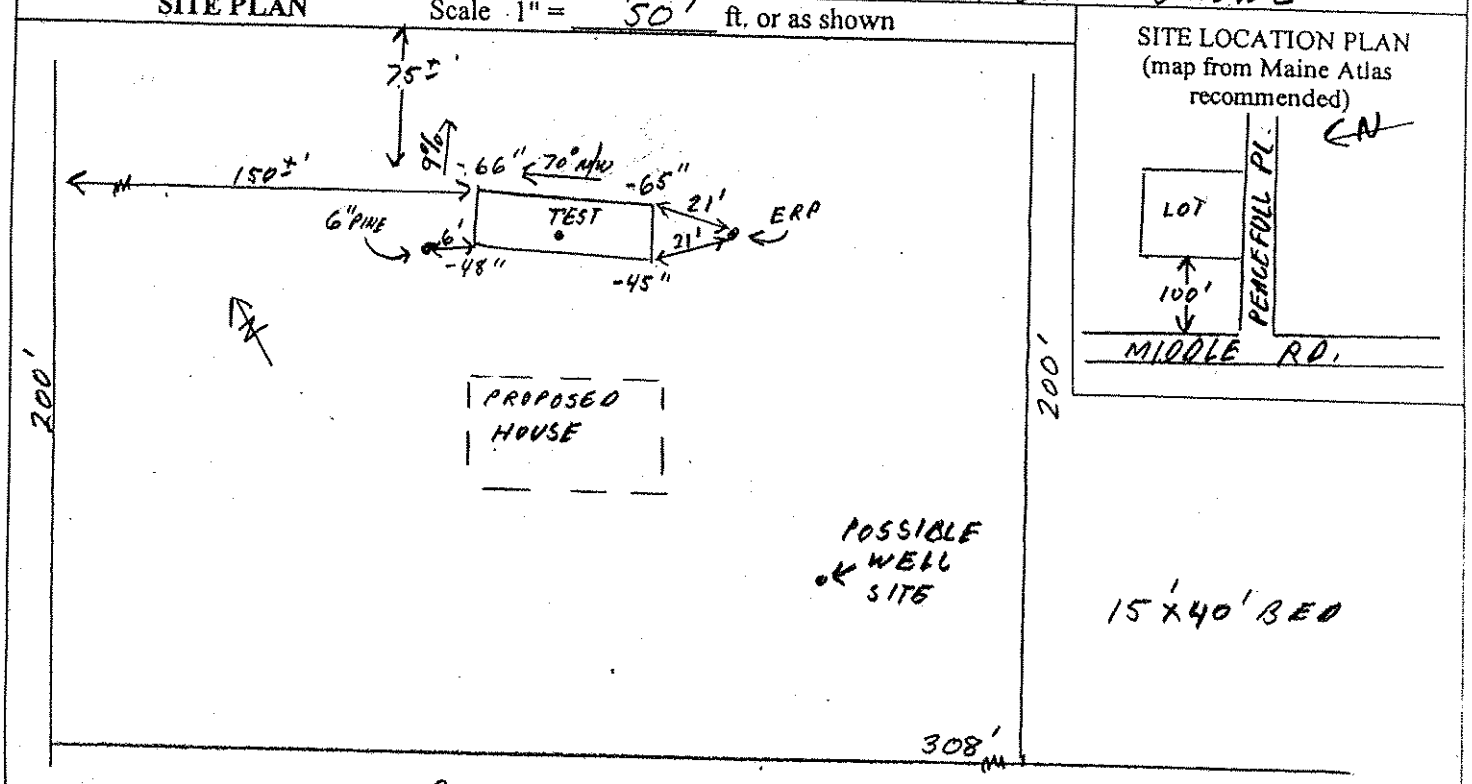

SITE LOCATION PLAN
(map from Maine Atlas recommended)

SOIL DESCRIPTION AND CLASSIFICATION (Location of Observation Holes Shown Above)

Observation Hole 1 ☑ Test Pit ☐ Boring

2± " Depth of Organic Horizon Above Mineral Soil

Depth Below Mineral Soil Surface (inches)	Texture	Consistency	Color	Mottling
0	SANDY LOAM	FRIABLE	DARK BR.	NONE
10	LOAMY SAND		YELLOW BR.	
20				
30	FINE LOAMY SAND	FIRM	GRAY	COMMON DISTINCT
40				
50				

Soil Classification	Slope	Limiting Factor	
3 Profile / C Condition	9 %	24"	[4] Ground Water [4] Restrictive Layer [ ] Bedrock [ ] Pit Depth

Observation Hole ____ ☐ Test Pit ☐ Boring

____ " Depth of Organic Horizon Above Mineral Soil

Depth Below Mineral Soil Surface (inches)	Texture	Consistency	Color	Mottling
0				
10				
20				
30				
40				
50				

Soil Classification	Slope	Limiting Factor	
Profile / Condition	%	"	[ ] Ground Water [ ] Restrictive Layer [ ] Bedrock [ ] Pit Depth

Site Evaluator Signature: [signature]

SE #: 256

Date: 8/11/15

SUBSURFACE WASTEWATER DISPOSAL SYSTEM APPLICATION

Maine Department of Human Services
Division of Health Engineering, Station 10
(207) 287-5672 FAX (207) 287-4172

Town, City, Plantation	Street, Road, Subdivision	Owner or Applicant Name
AUGUSTA	PEACEFULL PL.	DAN GAGNE

SUBSURFACE WASTEWATER DISPOSAL PLAN

Scale: 1" = 20' ft.

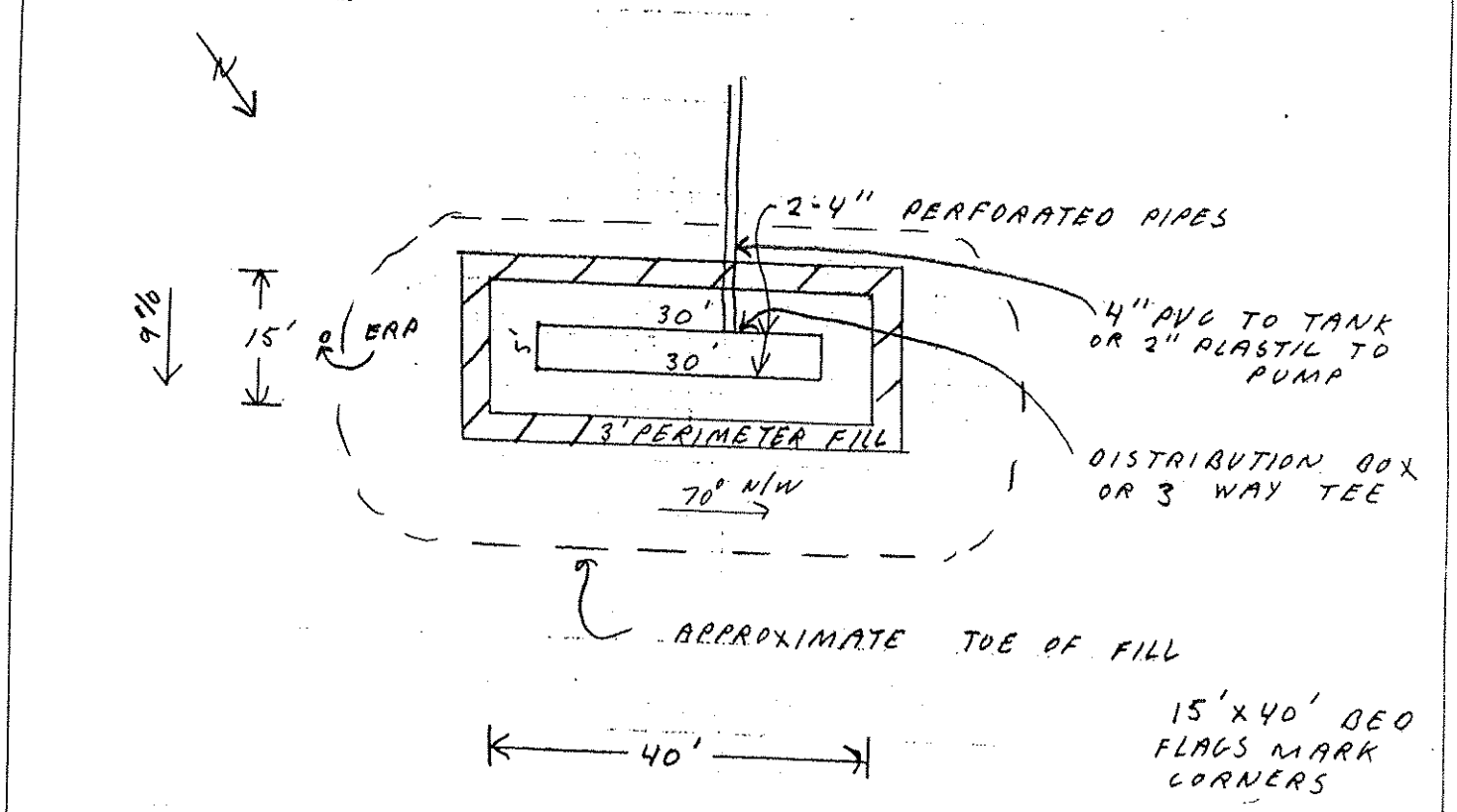

BACKFILL REQUIREMENTS

Depth of Backfill (upslope) 12"
Depth of Backfill (downslope) 33"
DEPTHS AT CROSS-SECTION (shown below)

CONSTRUCTION ELEVATIONS

Finished Grade Elevation -35"
Top of Distribution Pipe or Proprietary Device -47"
Bottom of Disposal Field -58"

ELEVATION REFERENCE POINT

Location & Description: ERP IS IN 6" MAPLE, 20' S/E OF SYS., 22" ABOVE
Reference Elevation is: 0.0" or: GROUND

DISPOSAL FIELD CROSS-SECTION

Scales:
Vertical: 1" = 5 ft.
Horizontal: 1" = 10 ft.

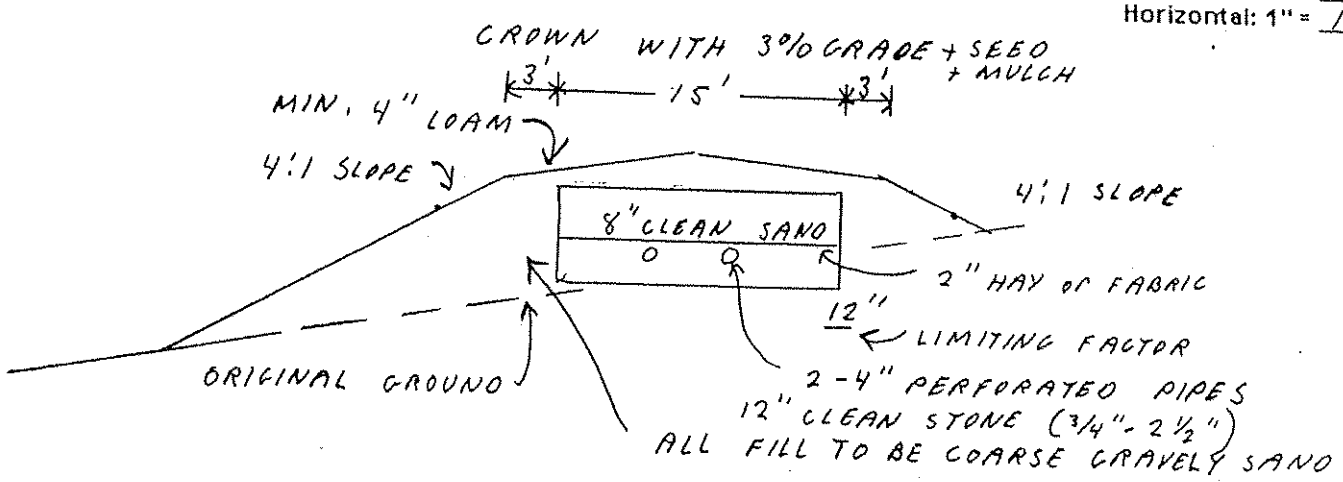

Site Evaluator Signature

256
SE #

8/11/15
Date