City of Augusta
Development Review Application

Bureau of Planning, Department of Development Services

Address of Proposed development: 439 Western Avenue

Zone(s): CC

Project Name: Darling's

Existing Building (sq. ft.): 32,649	**Proposed Building (sq. ft.):** 38,922
Existing Impervious (sq. ft.): 265,523	**Proposed Impervious (sq. ft.):** 263,430

Proposed Total Disturbed Area of the Site: 3.5±

Proposed disturbance of greater than one acre requires a Chapter 500, Stormwater Management Permit from the Maine Department of Environmental Protection (DEP).

Owner's Name/Address: Darling's Corporation 96 Parkway South Brewer, ME 04412 **Phone #:** 207-992-1740 **Cell #:** **e-mail:** jay.darling@darlings.com	**Applicant's Name/Address:** Same as Owner **Phone #:** **Cell #:** **e-mail:**	**Consultant's Name/Address:** CES, Inc. P.O. Box 639 Brewer, ME 04412 **Phone #:** 207-989-4824 **Cell #:** **e-mail:** sthies@ces-maine.com
Tax Map #: 83 **Lot #:** 1 ,1B, 3, 5	**Lot Size (acres):** 17.8 **Frontage (Feet):** 716	**Form for Evidence of Standing** (deed, purchase and sale agreement, other):

For Staff Use

Fee Calculation: Major Development max fee is $4,000; Minor Development max fee is $1,000

Major Development: $2,000 + (number of sq ft over 25,000 x $0.15) =

Minor Development: $250 + (number of sq ft over 5,000 x $0.15) =

All Development: Number of Abutters x (1oz First Class postage fee + $0.15) =

Total Fee:

Signatures

Applicant:_____ **Date:**_____

Owner:_____ **Date:**_____

Agent:_____ **Date:** 7-10-15

Checklist. The checklist below must be completed by the applicant. The required material or a written waiver request must be provided.

Information Required on Plan(s) See Augusta Land Use Ordinance for greater detail	**Included**	**Waiver Requested**
a. Name of Site Plan (Sec 4.5.2.1 of the Land Use Ordinance)	X	
b. Owner(s) name and address (4.5.2.2)	X	
c. Deed reference to subject parcel (4.5.2.3)	X	
d. Engineer's name, address, signature and seal (4.5.2.4)	X	
e. Surveyor's name, address, signature and seal (4.5.2.5)	X	
f. Scale, both in graphic and written form (4.5.2.6)	X	
g. Date and Revision box (4.5.2.7)	X	
h. Zoning designation(s) (4.5.2.8)	X	
i. North Arrow (true and magnetic, dated or grid) (4.5.2.9)	X	
j. Ownership, location and present use of abutting land (4.5.2.11)	X	
k. Location map (4.5.2.12)	X	
l. Streets, existing & proposed, with curve data (4.5.2.13 & 4.6.2.5)	X	
m. Drainage and erosion control (4.5.2.14)	X	
n. Utilities, existing and proposed (4.5.2.15)	X	
o. Topography, 2 foot contours (4.5.2.16)	X	
p. Parcel boundaries and dimensions (4.5.2.17)	X	
q. Proposed Use of the property (4.5.2.18)	X	
r. Proposed public or common areas (4.5.2.19)	X	
s. Boundary Survey and associated information (4.5.2.20)	X	
t. Traffic controls, off-street parking and facilities (4.5.2.21)	X	
u. Proposed fire protection plans or needs (4.5.2.22)	X	
v. Landscaping and buffering (4.5.2.23)	X	
w. Outdoor lighting plan (4.5.2.24)	X	
x. Freshwater wetlands (4.4.1.14)	X	
y. River, stream or brook (4.4.1.15)	X	
Information Required in Written Project Narrative See Augusta Land Use Ordinance for greater detail	**Included**	**Waiver Requested**
a. Pollution – Undue water or air pollution (4.4.1.1)	X	
b. Water – Sufficient potable water (4.4.1.2)	X	
c. Municipal Water – is there adequate supply (4.4.1.3)	X	
d. Soil Erosion – unreasonable soil erosion (4.4.1.4)	X	
e. Road congestion and safety (4.4.1.5 & 4.5.2.21)	X	
f. Sewage waste disposal – adequate provisions (4.4.1.6)	X	
g. Solid waste – adequate provisions (4.4.1.7)	X	
h. Aesthetic, cultural, and natural values (4.4.1.8)	X	
i. Conformity with city ordinances and plans (4.4.1.9)	X	
j. Financial and technical ability (4.4.1.10)	X	
k. Surface water, shoreland, outstanding rivers (4.4.1.11)	X	
l. Ground water – negative impact (4.4.1.12)	X	
m. Flood areas (4.4.1.13)	X	
n. Freshwater wetlands – description of impact (4.4.1.14)	X	
o. Stormwater – management plans (4.4.1.16)	X	
p. Access to direct sunlight (4.4.1.17)	X	
q. State Permits – description of requirements (4.4.1.18)	X	
r. Outdoor lighting – description of lighting plans (4.4.1.20)	x	

Additional Information Required in Written Narrative See Augusta Land Use Ordinance for greater detail **Where the items below duplicate the items above, identical responses are permitted and encouraged.**	**Included**	**Waiver Requested**
s. Neighborhood Compatibility – description per ordinance (6.3.4.1)		
t. Compliance with Plans and Policies (6.3.4.2)		
u. Traffic Pattern, Flow, and Volume analysis (6.3.4.3)		
v. Public facilities – Utilities including stormwater (6.3.4.4)		
w. Resource protection and the environment (6.3.4.5)		
x. Performance Standards (6.3.4.6)		
y. Financial and Technical Ability (6.3.4.7)		

Application Materials

The application materials that are required for a complete application are listed below:

Paper Copies	**Included**	**Waiver Requested**
10 copies of the application form and narrative	X	
10 copies of the deed, Purchase & Sale agreement, or other document to show standing	X	
3 copies of any stormwater report	X	
2 copies of any traffic report		X
6 reduced-sized copies of the complete plan set on 11" x 17" size paper	X	
4 full-sized copies of the complete plan set on ANSI D or E size paper	X	
10 copies of a letter authorizing the agent to represent the applicant	X	
Payment in full of application fee (Note: an abutter notification fee will be assessed after the application is determined to be complete. The fee is $0.15 plus the cost of first class postage for each abutter that will be notified as required by the ordinance.)		
Electronic Copy		
1 CD that includes each of the application documents in Adobe PDF format	x	

For Office Use Only

[illegible]	[illegible]	Received by (initials):	Date:
[illegible]	[illegible]	Received by (initials):	Date:

DEVELOPMENT REVIEW APPLICATION NARRATIVE

Narrative

The Applicant is proposing to construct a 25,800 square foot building at the existing dealership on Western Avenue in Augusta. The proposed building will be constructed within the existing parking lot and the existing building will be demolished upon completion of the new building. The site is used as a sales and service car dealership. The site is located on the corner of Old Winthrop Road and Western Avenue and currently has access from the two roads.

The number of employees and operation of the business will not change from the existing facility. Traffic generation is expected to be the same as the current facility.

Information Required

a. Pollution:

The proposed project will not create undue water or air pollution. The project is within an existing developed site. Dust will be controlled during construction by the use of water. There will not be any sources of water or air pollutants following construction.

b. Water:

Water use will be similar to the existing facility. The property is served by the Augusta Water District. Upon completion of the new building, the existing building will be demolished. The proposed water service will be connected to the existing service. There is no expected increase in water use.

c. Municipal Water:

Water use will be similar to the existing facility. The property is served by the Augusta Water District. Upon completion of the new building, the existing building will be demolished. The proposed water service will be connected to the existing service. There is no expected increase in water use.

d. Soil Erosion:

The proposed project is within the footprint of the existing impervious surface. During construction, soil erosion will be contained by appropriate Best Management Practices. The proposed project will not cause unreasonable soil erosion or a reduction in the land's capacity to hold water.

e. Road Congestion and Safety:

The proposed development will not cause unreasonable public road congestion or unsafe conditions. The project is not expected to create any more traffic than currently exists on the site.

f. Sewage Waste Disposal:

The proposed development will be connected to the municipal sewer system. Sewer generated from the development will be similar to the existing facility that will be demolished. No increase in sewer flows is expected.

g. Solid Waste:

Solid waste generated by the development is collected in dumpsters on site and disposed of by a private company. The solid waste generated does not impact the municipal services. Sewage is not expected to increase from what is currently generated on site.

h. Aesthetic, Cultural, and Natural Values:

The proposed project will not have any impacts on the aesthetic, cultural, or natural values. The project is all with an existing developed site and it is compatible with the uses on adjacent properties.

i. Conformity with city Ordinances and Plans:

To the best of our knowledge, the proposed project conforms to all City Ordinances and plans.

j. Financial and Technical Ability:

Please refer to the attached letter indicating the financial ability of the applicant. The applicant and their agent have developed and operate several similar facilities throughout the State.

k. Surface Water, Shoreland, Outstanding Rivers:

The proposed project is not within the watershed of any pond or lake or within 250 feet of any wetland, great pond or river.

l. Groundwater:

The proposed project will not have a negative impact on groundwater. The project is within the footprint of an existing developed site and it is served by municipal water and sewer. There is no ledge blasting proposed for this project.

m. Flood Areas:

The proposed project is not located within a 100 year flood plain.

n. Freshwater Wetlands:

There are no wetlands within the project area. There will not be any impacts on freshwater wetlands associated with this project.

o. Stormwater:

Please refer to the Stormwater Management report that has been submitted under separate cover. The proposed project will provide adequate stormwater management.

p. Access to Direct Sunlight:

The proposed project will not restrict access to sunlight on adjacent properties.

q. State Permits:

The applicant has applied for an Amendment to their existing Site Location of Development permit from the Maine Department of Environmental Protection (MDEP). The application has been deemed complete for processing and is currently being reviewed by MDEP.

r. Outdoor Lighting:

Please refer to the attached lighting plan and specifications. All outdoor lighting is full cut off to provide lighting for the building, parking, and display areas. There will not be excessive glare on Western Avenue or Old Winthrop Road from this development.

June 30, 2015

To Whom It May Concern:

Please be advised that CES, Inc. is hereby authorized to act on behalf of Darling's Corporation in regards to the City of Augusta Conditional Use Application associated with the proposed development at 439 Western Avenue in Augusta.

John B Darling II
Printed Name and Title

Signature

6/30/15
Date

KeyBank National Association
KeyBank Dealer Services
OH-01-51-4011
4910 Tiedeman Road
Brooklyn, OH 44144

To Whom It May Concern Regarding Darlings, Inc.:

Darlings, Inc. has a long-standing relationship with KeyBank extending over 25 years. The relationship has been held in exemplary fashion and includes: a mid-level 8 figure operating line of credit; a depository relationship within the low 8 figures; and no outstanding term debt. The client has complied with the terms of their agreement.

Regards,

Greg Tkachyk

Commercial Relationship Officer, KeyBank Dealer Services.
4910 Tiedeman Road (OH-01-51-4011)
Brooklyn, OH 44144

cc. Jay Darling

Darlings, Inc.

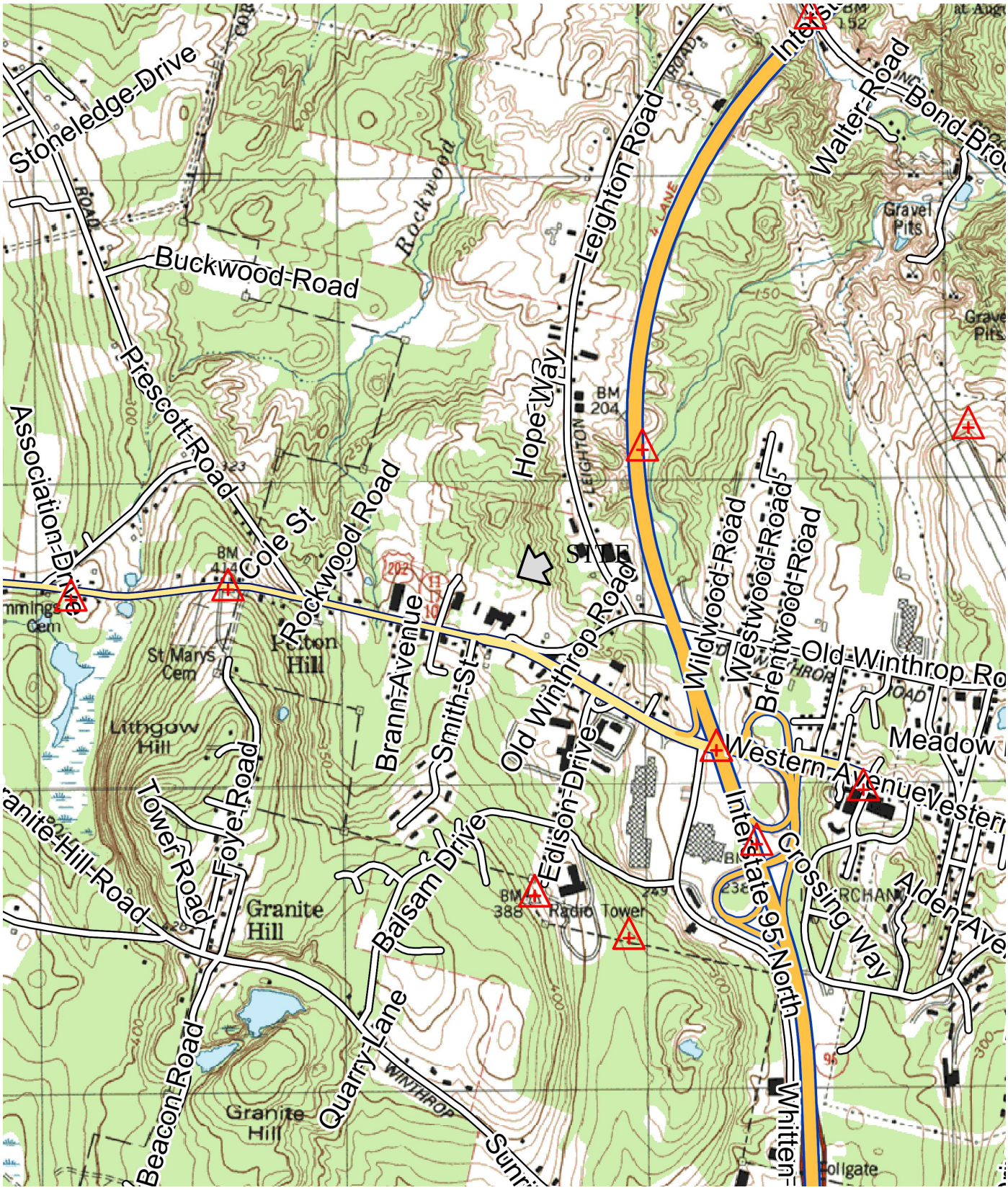

SOURCE:
U.S.G.S. TOPOGRAPHIC QUADRANGLE

NTS

CES INC

DARLING'S CHRYSLER DODGE
439 WESTERN AVE. AUGUSTA, ME

LOCATION MAP

06/15/2015
10570.005

TRANSFER
TAX
PAID

QUITCLAIM DEED WITH COVENANT

Statutory Short Form

KNOW ALL BY THESE PRESENTS THAT We, **Mary Duke Blouin**, Trustee of the Mary Duke Blouin Revocable Trust, of Naples, Collier County, Florida 34105, and **John Duke Blouin**, individually, of Augusta, Kennebec County, Maine 04351, for consideration paid, GRANT to **Darling's**, a Maine corporation, with an address of 96 Parkway South, Unit 1, Brewer, Penobscot County, Maine 04412, WITH QUITCLAIM COVENANT, the land and buildings in Augusta, Kennebec County, Maine, described as follows:

See Exhibit A attached hereto

Witness our hands and seals this __ day of April, 2007.

Witness:

Monica I Arria
Monica I. Arria

Mary Duke Blouin, as Trustee of the
Mary Duke Blouin Revocable Trust

John Duke Blouin, individually

STATE OF FLORIDA
COUNTY OF COLLIER, ss.

On April 13, 2007, personally appeared the above-named Mary Duke Blouin and acknowledged the foregoing instrument to be her free act and deed, in her said capacity.

Before me,

Theresa S. DiSabato
Notary Public
Printed Name: _____
My commission: _____

THERESA S. DISABATO
Notary Public - State of Florida
My Commission Expires Feb 22, 2009
Commission # DD 384874

4) R.r.K.

STATE OF MAINE
COUNTY OF KENNEBEC, ss.

On April 17, 2007, personally appeared the above-named John Duke Blouin and acknowledged the foregoing instrument to be his free act and deed.

Before me,

~~Notary Public~~ Attorney at Law
Printed Name: David M Lipman
My commission: _____

EXHIBIT A

Certain real estate situated in the City of Augusta in the County of Kennebec, bounded and described as follows:

Parcel 1: A certain lot or parcel of land situated in Augusta, County of Kennebec and State of Maine, bounded and described as follows, to wit:

Commencing at an iron pin located on the north side of Western Avenue at the intersection of Maisie A. Lee and Richard S. Lee's easterly boundary and the boundary of the State Highway right-of-way line, said pin also being the southwest corner of a lot of land owned by the within grantee; thence running in a course of north thirty-three degrees forty-three minutes East (N 33° 43' E), a distance of four hundred eighty-four and four tenths (484.4) feet to an iron pin; thence in a course of north sixty degrees forty minutes (N 60° 40' W) West, a distance of twenty (20) feet to an iron pin; thence in a generally southerly direction on the line parallel to the easterly boundary of said land a distance of approximately four hundred eighty-four and four tenths feet (484.4) to an iron pin on the right-of-way line on the north side of Western Avenue; thence along said northerly right-of-way line on Western Avenue a distance of twenty (20) feet to the point of beginning.

Parcel 2: Beginning at an iron pin on the northerly line of Western Avenue approximately 500' westerly of the intersection of Winthrop Road and Western Avenue; thence northeasterly a distance of 484.4' to an iron pin, thence in a southeasterly direction 164' feet to an iron pin; thence northerly 6' to an iron pin; thence southeasterly a distance of 259.75' to an iron pin; thence southerly a distance of 502.25' to the northerly line of said Western Avenue; thence westerly along the northerly line of said Western Avenue to the point of beginning (a distance of approximately 450') being a part of the premises shown on a Plan of Land....Blouin Motors, Inc. dated September 24, 1968, made by J. Collins, which plan is recorded in Kennebec County Registry of Deeds, Plan Book 35, Pages 49-50, to which plan reference is made for a more particular description.

Excepting and reserving from the above described parcels the property conveyed in a deed to the State of Maine recorded in Book 726, Page 443 of the Kennebec County Registry of Deeds.

Further excepting and reserving from the above described parcels the property conveyed in a deed from the C. Peter Blouin Revocable Trust to Duke Properties, LLC, dated January 11, 2002, and recorded in Kennebec County Registry of Deeds in Book 6780, Page 332.

Further excepting and reserving from the above described parcels the property conveyed in a deed from the C. Peter Blouin Revocable Trust to Duke Properties, LLC, dated

December 28, 2001, and recorded in Kennebec County Registry of Deeds in Book 6755, Page 17.

Meaning and intending to convey a portion of the premises described in deeds recorded in the Kennebec County Registry of Deeds in Book 6918, Page 169 and Book 8761, Page 34.

The above parcels are further conveyed subject to the following:

1. Terms and conditions of rights and easements as set forth in the Notice of Layout and Taking by the State of Maine dated October 12, 1966 and recorded in Book 1429, Page 433, as affected by the Supplemental Notice of Taking dated April 19, 1967 and recorded in Book 1440, Page 71 and the Deeds of Vacation from the State of Maine to Blouin Motors, Inc., dated June 21 1967 and recorded in Book 1446, Page 2 and to C. Peter Blouin Jr., dated August 23, 1967 and recorded in Book 1450, Page 784.

2. Terms and conditions of rights and easements as set forth in the instrument from John N. McAuley to the State of Maine dated October 8, 1952 and recorded in Book 937, Page 33.

3. Rights and easements granted to Central Maine Power Company as set forth in an instruments dated May 7, 1953 and recorded in Book 941, Page 243; dated August 7, 1956 and recorded in Book 1058, Page 299; and dated September 12, 1973 and recorded in Book 1684, Page 87.

4. Terms and conditions of rights and easements as set forth in the instrument from Adeline M. Creasy to John N. McAuley dated May 6, 1947, and recorded in Book 854, Page 289.

Received Kennebec SS.
04/17/2007 10:56AM
Pages 4 Attest:
BEVERLY BUSTIN-HATHEWAY
REGISTER OF DEEDS

Doc # 2007009578
Book 9314 Page 0322

TRANSFER
TAX
PAID

QUITCLAIM DEED WITH COVENANT

Statutory Short Form

KNOW ALL BY THESE PRESENTS, That **Duke Properties, LLC**, a Maine limited liability company, of Augusta, Kennebec County, Maine, for consideration paid, GRANTS to **Darling's**, a Maine corporation, with an address of 96 Parkway South, Unit 1, Brewer, Penobscot County, Maine 04412, WITH QUITCLAIM COVENANT, the land and buildings in Augusta, Kennebec County, Maine, described as follows:

See Exhibit A attached hereto.

IN WITNESS WHEREOF, the said Duke Properties, LLC, has caused this instrument to be sealed with its corporate seal and signed in its corporate name by John D. Blouin and Barbara Jackson, all of its Members, thereunto duly authorized, this 16 day of April, 2007.

Signed, Sealed and Delivered
in presence of

Duke Properties, LLC

By: _____
John D. Blouin, Member

By: _____
Barbara Jackson, Member

STATE OF MAINE
County of Kennebec, ss.

April 16, 2007

Then personally appeared the above named John D. Blouin and Barbara Jackson, its Members, and acknowledged the foregoing instrument to be their free act and deed in their said capacity and the free act and deed of said limited liability company.

Before me,

_____
~~Notary~~ Public/Attorney-at-Law
Print name: David M Lipman
My commission: _____

a) L.K

Exhibit A

Parcel One:

The land in Augusta, Kennebec County, Maine, described as follows:

Beginning at a 1" x 12" iron pipe in the northeasterly line of Old Winthrop Road, so-called, being the southeasterly corner of land belonging to C. Peter Blouin and described in deeds recorded in the Kennebec County Registry of Deeds at Book 1535, Page 386 and Book 1574, Page 878; thence N 30°-03'-20" E a distance of four hundred ninety-eight and eight-tenths feet (498.8') to a 5/8" x 14" rebar, being the northwesterly corner of land now or formerly of C. Peter Blouin described in a deed recorded in said Registry in Book 1074, Page 82;

Thence along the westerly line of said Blouin, in a generally southerly and easterly direction a distance of three hundred ninety-two feet (392'), more or less, to a point, said point being in the westerly line of land now or formerly or Gordon Gove and described in deeds recorded in said Registry, Book 2948, Page 13 and Book 1897, Page 352;

Thence in a generally southerly and westerly direction along said westerly line of Gove (2948/13 and 1897/352) a distance of eighty-two feet (82'), more or less, to a point;

Thence at a right angle in a northerly and westerly direction to a point, said point being in a line forty feet (40') southerly and easterly of and parallel to the southerly and easterly line of land now of C. Peter Blouin described in deeds recorded in said registry in Book 1535, Page 386 and Book 1574, Page 878;

Thence in a generally southerly and westerly direction along said line parallel to the southerly and easterly line of land now of C. Peter Blouin described in deeds recorded in said registry in Book 1535, Page 386 and Book 1574, Page 878 to a point in the northeasterly line of Old Winthrop Road, so-called;

Thence in a generally northerly and westerly direction along the northeasterly line of Old Winthrop Road to the point of beginning.

Meaning and intending to described the property conveyed in a Warranty Deed from Ella A. Collins to Duke Properties, LLC, dated December 29, 1999, and recorded in the Kennebec County Registry of Deeds in Book 6128, Page 147.

Parcel Two:

A certain lot or parcel of land, together with any buildings thereon, situated in Augusta, County of Kennebec and State of Maine, bounded and described, in 1963, as follows, to wit:

A certain lot or parcel of land situated in Augusta, Maine, Kennebec County, as described in two parcels in a deed of mortgage from J.A. Sawtelle to Kennebec Savings Bank, dated March 10, 1880, recorded in the Kennebec County Registry of Deeds, Book 325, at Page 530, and bounded northerly by land formerly owned by Levi Page deceased; Easterly by the Coombs Mill Road, so-called; Southerly by the County Road leading from Augusta to Winthrop and land of Charles Beck; and Westerly by land of said Charles Beck, reference to said Deed of mortgage being hereby made for a particular description thereof. Being the same premises conveyed to Mary E. Whitten and Edward Griffin by the Kennebec Savings Bank by its Warranty Deed dated March 15, 1886 and recorded in Kennebec County Registry of Deeds, Book 359, Page 273, with the exception of a certain parcel sold for a gasoline station.

Excepting and reserving the parcel of property described in a Warranty Deed from Ella A. Collins to Duke Properties, LLC, dated December 29, 1999, and recorded January 3, 2000, in the Kennebec County Registry of Deeds in Book 6128, Page 147.

Meaning and intending to describe the property conveyed in a Deed of Sale by Personal Representative from Warren E. Creasy, Jr., Personal Representative of the Estate of Ella A. Collins, to Duke Properties, LLC, dated August 21, 2001, and recorded in the Kennebec County Registry of Deeds in Book 6624, Page 35.

Parcel Three:

A certain lot or parcel of land, together with any buildings thereon, located in the City of Augusta, County of Kennebec, State of Maine, and being bounded and described as follows:

Beginning at a point in the easterly right of way of the Old Winthrop Road, so-called, said point being the southwesterly corner of land now or formerly of Duke Properties, LLC and described in a deed recorded in Kennebec County Registry of Deeds in Book 6128, Page 147; thence in a generally northwesterly direction along the right of way of said Old Winthrop Road to a point, said point being seventy feet (70') from the northwesterly line of said land of Duke Properties, LLC, with said distance being measured on a perpendicular from said northwesterly line to said point; thence N 30°03'20" E and parallel to the northwesterly line of said land of Duke Properties, LLC, a distance of four hundred ninety-eight feet (498'), more or less, to a point, said point being on the northeasterly line of land now or formerly of the C. Peter Blouin Revocable Trust and described in a deed recorded in Kennebec County Registry of Deeds in Book 3827, Page 39; thence S 62°02'02" E, a distance of seventy feet (70'), to the northwesterly

corner of said land of Duke Properties, LLC; thence S 30°03'20" W, a distance of four hundred ninety-eight and eight-tenths feet (498.80'), along the northwesterly line of said land of Duke Properties, LLC, to the point of beginning.

Meaning and intending to describe the property conveyed in a deed from the C. Peter Blouin Revocable Trust to Duke Properties, LLC, dated December 28, 2001, and recorded in Kennebec County Registry of Deeds in Book 6755, Page 17.

Parcel Four:

A certain lot or parcel of land, together with any buildings thereon, located in the City of Augusta, County of Kennebec, State of Maine, and being bounded and described as follows:

Beginning at the northeast corner of land now or formerly of the C. Peter Blouin Revocable Trust, recorded in Kennebec County Registry of Deeds in Book 3827, Page 39; thence S 62°02'02" E, a distance of two hundred and thirty-seven hundredths feet (200.37') to a point; thence S 29°56'33" W, a distance of three hundred thirty and thirty-nine hundredths feet (330.39') to a point; thence N 1°49'03" W, along the easterly line of property now or formerly of Duke Properties, LLC and described in a deed recorded in Kennebec County Registry of Deeds in Book 6128, Page 147, a distance of three hundred eighty and forty-four hundredths feet (380.44'), more or less, to the point of beginning.

Together with a right of way thirty feet (30') in width, from Old Winthrop Road, so-called, for purposes of ingress and egress to the land above conveyed, over land now or formerly of Gordon R. Gove, which right of way is described more fully in a deed recorded in Kennebec County Registry of Deeds in Book 1897, Page 352.

Meaning and intending to describe the property conveyed in a deed from the C. Peter Blouin Revocable Trust to Duke Properties, LLC, dated January 11, 2002, and recorded in Kennebec County Registry of Deeds in Book 6780, Page 332.

The above parcels are also further bounded and described as follows:

A certain lot or parcel of land on the apparent northeasterly sideline of the Old Winthrop Road in the City of Augusta, County of Kennebec, State of Maine, being bounded and described as follows:

Beginning at an iron rod set at the southerly corner of land now or formerly of Duke Properties, LLC (deed reference Book 6128, Page 147) and the westerly corner of land now or formerly of Charles & Nancy Shuman (deed reference Book 6271, Page 96) on the apparent northeasterly sideline of the Old Winthrop Road;

Thence, North seventy-three degrees, thirty-three minutes, twenty-seven seconds West (N 73° 33' 27" W), along the apparent northeasterly sideline of said Old Winthrop Road as shown on a plan entitled "Maine State Highway Commission Right of Way Map" dated March 1966, S.H.C. File No. 6-145 (unrecorded), one hundred twenty and zero hundredths (120.00) feet to an iron rod set;

Thence, in a northwesterly direction, along a non-tangent curve to the right, having a radius of five hundred sixty-two and ninety-six hundredths (562.96) feet, an arc length of one hundred fifty-five and seventy-two hundredths (155.72) feet, a chord bearing of North fifty-four degrees, thirty-seven minutes, ten seconds West (N 54° 37' 10" W) and a chord distance of one hundred fifty-five and twenty-three hundredths (155.23) feet to an iron rod set;

Thence, North thirty degrees, three minutes, twenty seconds East (N 30° 03' 20" E), passing through remaining land of C. Peter Blouin Revocable Trust (deed reference Book 3827, Page 39 - parcel no. 2), four hundred eighty-four and thirty-six hundredths (484.36) feet to an iron rod set at the southwesterly line of land now or formerly of Rockwood Development Corporation (deed reference Book 3418, Page 314);

Thence, South sixty-two degrees, two minutes, two seconds East (S 62° 02' 02" E), along the southwesterly line of land now or formerly of said Rockwood Development Corporation, two hundred seventy and forty-two hundredths (270.42) feet to an iron rod set at the northerly corner of land now or formerly of said Shuman;

Thence, South twenty-nine degrees, fifty-six minutes, thirty-three seconds West (S 29° 56' 33" W) along the northwesterly line of land now or formerly of said Shuman, four hundred eighty and thirty-eight hundredths (480.38) feet to the Point of Beginning.

Said parcel contains 3.78 acres.

Also conveying along with the premises is a thirty (30) foot wide right of way for the purpose of ingress and egress over and across land now or formerly of Charles & Nancy Shuman (deed reference Book 6271, Page 96), being bounded and described as follows:

Beginning at an iron rod set at the southerly corner of land now or formerly of Duke Properties, LLC (deed reference Book 6128, Page 147) and the westerly corner of land now or formerly of Charles & Nancy Shuman (deed reference Book 6271, Page 96) on the apparent northeasterly sideline of the Old Winthrop Road;

Thence, North twenty-nine degrees, fifty-six minutes, thirty-three seconds East (N 29° 56' 33" E), along the northwesterly line of land now or formerly of said Shuman, two hundred six and ninety-nine hundredths (206.99) feet;

Thence, South one degree, forty-nine minutes, three seconds East (S 1° 49' 03" E), passing through land now or formerly of said Shuman, fifty-six and ninety-nine hundredths (56.99) feet;

Thence, South twenty-nine degrees, fifty-six minutes, thirty-three seconds West (S 29° 56' 33" W), passing through land now or formerly of said Shuman, one hundred fifty-one and thirty-three hundredths (151.33) feet to the apparent northerly sideline of said Old Winthrop Road;

Thence, North seventy-three degrees, thirty-three minutes, twenty-seven seconds West (N 73° 33' 27" W), along the apparent northerly sideline of said Old Winthrop Road, thirty and eighty-five hundredths (30.85) feet to the Point of Beginning.

All bearings refer to Magnetic North as shown on a plan entitled "Standard Boundary Survey for Blouin Property" dated September 24, 1989 by James D. Jolicoeur, RLS 419 (unrecorded).

All iron rods set are 5/8 inch diameter rebar with surveyor's identification cap #2295.

The above described parcels are further conveyed subject to the following:

1. Terms and conditions of rights and easements as set forth in the Notice of Layout and Taking by the State of Maine dated October 12, 1966 and recorded in Book 1429,Page 433, as affected by the Supplemental Notice of Taking dated April 19, 1967 and recorded in Book 1440, Page 71.

2. Terms and conditions of rights and easements as set forth in an instrument from John N. McAuley to the State of Maine dated October 8, 1952 and recorded in Book 937, Page 33.

3. Rights and easements granted to Central Maine Power Company as set forth in instruments from John McAuley dated May 7, 1953 and recorded in Book 941, Page 243 and August 7, 1956 and recorded in Book 1058, Page 299.

4. Rights and easements granted to Central Maine Power Company and Verizon New England, Inc. as set forth in an instrument from Duke Properties, LLC dated September 4, 2002 and recorded in Book 7096, Page 200.

5. Terms and conditions of a Department of Environmental Protection Order for site location of development for Blouin Hyundai dated October 24, 2002 and recorded in Book 7146, Page 64 as affected by the Modification Order dated September 9, 2005 and recorded in Book 8613, Page 139.

6. Terms and conditions of rights and easements as set forth in the Notice of Layout and Taking by the State of Maine dated October 30, 1957 and recorded in Book 1096, Page 160, as affected by the Receipt and Confirmation of Taking dated February 11, 1958 and recorded in Book 1107, Page 232.

7. Terms and conditions of rights and easements granted the State of Maine, State Highway Commission from Adeline M. Creasy to the State of Maine dated July 7, 1956 and recorded in Book 1052, Page 391.

8. Terms and conditions of rights and easements as set forth in an instrument from Ella A. Collins to C. Peter Blouin dated August 19, 198 and recorded in Book 3414, Page 50.

9. Terms and conditions of rights and easements as set forth in an instrument from Ella A. Collins to David A. Gove dated June 24, 1988 and recorded in Book 3381, Page 157.

10. Terms and conditions of appurtenant rights and easements as set forth in an instrument from C. Peter Blouin, a/k/a Calix P. Blouin to Gordon R. Gove dated April 21, 1976 and recorded in Book 187, Page 352.

11. Terms and conditions of appurtenant rights and easements as set forth in an instrument from C. Peter Blouin, individually and C. Peter Blouin and Mary Duke Blouin, Trustees of the C. Peter Blouin Revocable Trust to Duke Properties, LLC dated January 11, 2002 and recorded in Book 6780, Page 332.

12. Rights and easements granted to Central Maine Power Company as set forth in an instrument from Blouin Motors, Inc., dated September 9, 1973 and recorded in Book 1684, Page 87.

Parcel Five:

A certain lot or parcel of land, together with any buildings thereon, situated in Augusta, County of Kennebec and State of Maine, bounded and described as follows:

The remaining portion of the property conveyed by Adeline M. Creasy to Ella A. Collins, by Warranty Deed dated June 20, 1963, and recorded June 26, 1963 in the Kennebec County Registry of Deeds in Book 1305, Page 231, and presently appearing as Lot 5 on Augusta Tax Map 83.

Meaning and intending to describe the property conveyed in a Deed of Sale by Personal Representative from Warren E. Creasy, Jr., Personal Representative of the Estate of Ella

A. Collins, to Duke Properties, LLC, dated September 10, 2003, and recorded in the Kennebec County Registry of Deeds in Book 7627, Page 104.

The above Parcel Five also being further bounded and described as follows:

Bounded on the north by land of Blouin Motors, Inc. described in the deed from Rockwood Development Corporation recorded in Book 7163, Page 1, and land now or formerly of John E. Lucey et al, Trustees of Engine Realty Trust described in the deed recorded in Book 3577, Page 108;

Bounded on the east by Leighton Road, land now or formerly of Winfred G. Turner described in the deed from Winfred G. Turner as Personal Representative of the Estate of Alice W. Marcy recorded in Book 8444, Page 25, and land now or formerly of Arnold Haskell described in the deed recorded in Book 8820, Page 289;

Bounded on the south by land now or formerly of Beverly G. Naoum and Jeanalys G. Ballard described in the deed from Beverly G. Naoum recorded in Book 7698, Page 33, and the northwesterly sideline of the Old Winthrop Road, so called; and

Bounded on the west by land now or formerly of Charles Shuman and Nancy B. Shuman described in the deed from David Gove recorded in Book 6271, Page 96.

The above described parcel is further conveyed subject to the following:

1. Terms and conditions of rights and easements as set forth in the Notice of Layout and Taking by the State of Maine dated October 12, 1966 and recorded in Book 1429, Page 433 as affected by the Supplemental Notice of Taking dated April 19, 1967 and recorded in Book 1440, Page 71.

2. Terms and conditions of rights and easements as set forth in an instrument from Ella A. Collins to C. Peter Blouin dated August 19, 1988 and recorded in Book 3414, Page 50.

3. Terms and conditions of rights and easements as set forth in an instrument from Ella A. Collins to David A. Gove dated June 24, 1988 and recorded in Book 3381, Page 157.

4. Terms and conditions of rights and easements granted the State of Maine, State Highway Commission from Adeline M. Creasy to the State of Maine dated July 7, 1956 and recorded in Book 1052, Page 391.

5. Terms and conditions of rights and easements as set forth in the Notice of Layout and Taking by the State of Maine dated October 30, 1957 and recorded in Book

1096, Page 160, as affected by the Receipt and Confirmation of Taking dated February 11, 1958 and recorded in Book 1107, Page 232.

6. Terms and conditions of a Department of Environmental Protection Order for site location of development for Blouin Hyundai dated October 24, 2002 and recorded in Book 7146, Page 64 as affected by the Modification Order dated September 9, 2005 and recorded in Book 8613, Page 139.

Received Kennebec SS.
04/17/2007 10:56AM
Pages 9 Attest:
BEVERLY BUSTIN-HATHEWAY
REGISTER OF DEEDS

TRANSFER TAX PAID

QUITCLAIM DEED WITH COVENANT

Statutory Short Form

KNOW ALL BY THESE PRESENTS, That **Blouin Motors, Incorporated**, a Maine corporation, of Augusta, Kennebec County, Maine, for consideration paid, GRANTS to **Darling's**, a Maine corporation, with an address of 96 Parkway South, Unit 1, Brewer, Penobscot County, Maine 04412, WITH QUITCLAIM COVENANT, the land and buildings in Augusta, Kennebec County, Maine, described as follows:

See Exhibit A attached hereto.

IN WITNESS WHEREOF, the said Blouin Motors, Incorporated, has caused this instrument to be sealed with its corporate seal and signed in its corporate name by John D. Blouin, its President, thereunto duly authorized, this ____ day of April, 2007.

Signed, Sealed and Delivered
in presence of

Blouin Motors, Incorporated

By: _____
John D. Blouin, its President

STATE OF MAINE
County of Kennebec, ss.

April 16, 2007

Then personally appeared the above named John D. Blouin, President, and acknowledged the foregoing instrument to be his free act and deed in his said capacity and the free act and deed of said corporation.

Before me,

_____
~~Notary Public~~/Attorney-at-Law
Print name: David M Lighway
My commission: _____

c) L.K.

Exhibit A

Parcel One:

A certain lot or parcel of land situated in the city of Augusta, County of Kennebec, and State of Maine bounded and described as follows:

Beginning at an existing 3/4" capped iron rod on the northeasterly line of land of the grantee as described in two deeds recorded in the Kennebec County Registry of Deeds in Book 1574, Page 878 and Book 1535, Page 386 and at the southeasterly corner of the grantor, Dirigo Properties, Inc. as is described in a deed recorded in said registry in Book 3437, Page 154 (the point of beginning is the end of course #5 of this description); thence

1. North seventeen degrees thirty-nine minutes forty seconds East (N 17° 39' 40" E) along the Westerly line of the grantee, a distance of six and no hundredths (6.00) feet to an existing 314 inch iron pipe at land of John H. Shostak et al; thence

2. North twenty-three degrees twelve minutes twenty seconds East (N 23° 12' 20" E) along the Westerly line of said Shostak's land as described in confirmatory deeds recorded at Book 4729, Pages 151 and 153, a distance of seventy-nine and seventy-five hundredths (79.75) feet to an existing capped 3/4 inch iron rod set in the ground; thence

3. North seven degrees forty-three minutes thirty seconds West (N 07° 43' 30" W) along the Westerly line of said Shostak's land, a distance of forty-eight and sixty-five hundredths (48.65) feet to an existing capped 314 inch iron rod set in the ground; thence

4. North twenty-eight degrees fifty-five minutes West (N 28° 55' W) along the Southwesterly line of said Shostak's land, a distance of one hundred eighty-six and ninety hundredths (186.90) feet to an existing capped 3/4 inch iron rod set in the ground; thence

5. North sixty-nine degrees zero minutes West (N 69° 00' W) along the Southwesterly line of said Shostak's land, a distance of one hundred forty-eight and forty-eight hundredths (148.48) feet to an existing capped 3/4 inch iron rod set in a drill hole in n boulder at the end of a stone wall; thence

6. North seventy-one degrees nine minutes fifty seconds West (N 71° 09' 50" W) along the Southwesterly line of said Shostak's land and along a stone wall, a distance of fifty-six and forty-two hundredths (56.42) feet to a found 8 X 9 X 6 inch triangular stone set in the ground at the apparent southeasterly corner of land now or formerly owned by Mary D. Blouin as described in a deed recorded in said registry in Book 1457, Page 324; thence

7. North eighty degrees fifty-three minutes fifty-five seconds West (N 80° 53' 55" W) along the southwesterly line of said Blouin's land and along said stone wall, a distance of fifty and no hundredths (50.00) feet to a point; thence

8. South fourteen degrees twenty-nine minutes fifty seconds West (S 14° 29' 50" W) one hundred ninety-four and sixty-one hundredths (194.61) feet by remaining land of the grantor to a point; thence

9. South seventy-three degrees thirty-six minutes thirteen seconds east (S 73° 36' 13" E) one hundred ten and no hundredths (110.00) feet to a point; thence

10. South thirteen degrees twelve minutes twenty seconds West (S 13° 12' 20" W) a distance of ninety and no hundredths (90.00) feet to a point on the northerly line of land now or formerly owned by Evans Products Company as described in a deed recorded in said registry Book 1637, Page 50; thence

11. South seventy-six degrees forty-seven minutes forty seconds east (S 76° 67' 40" E) two hundred seventy-six and ten hundredths (276.10) feet to the existing 3/4" iron rod marking the point of beginning;

Bearings are referenced to true north by solar observation and calculated from angles of a traverse.

The above parcel contains two and four hundredths (2.04) acres, more or less, and is a portion of that land conveyed to Dirigo Properties, Inc. by Warranty Deed of Lee Farm Associates, dated September 29, 1988, recorded in said registry of deeds Book 3437, Page 154.

Excepting and reserving from the above described parcel the property conveyed in a deed to the State of Maine recorded in Book 726, Page 443 of the Kennebec County Registry of Deeds.

Further excepting and reserving from the above described parcel the property described as Parcel Two in a Warranty Deed from Blouin Motors, Inc. to Charles Shuman and Nancy B. Shuman, dated April 19, 2002, and recorded in the Kennebec County Registry of Deeds in Book 6882, Page 189.

Further excepting and reserving from the above described parcel the property described as Parcel One in a Warranty Deed from Blouin Motors, Inc. to Charles Shuman and Nancy B. Shuman, dated August 6, 2004, and recorded in the Kennebec County Registry of Deeds in Book 8066, Page 290.

Meaning and intending to describe the property conveyed in a deed from Dirigo Properties Inc. to Blouin Motors, Inc., dated June 5, 1989 and recorded in the Kennebec County Registry of Deeds in Book 3621, Page 344.

The above parcel is further conveyed subject to the following:

1. Terms and conditions of rights and easements as set forth in the Notice of Layout and Taking by the State of Maine dated October 12, 1966 and recorded in Book 1429, Page 433, as affected by the Supplemental Notice of Taking dated April 19, 1967 and recorded in Book 1440, Page 71.

2. Terms and conditions of rights and easements as set forth in an instrument from Lee Farm's Assoc. to New England Telephone and Telegraph Company & Central Maine Power Company dated August 11, 1986 and recorded in Book 3005, Page 345.

3. Terms and conditions of rights and easements as set forth in an instrument from Lee Farm Associates to Augusta Sanitary District dated March 23, 1988 and recorded in Book 3396, Page 192.

4. Terms and conditions of rights and easements as set forth in instruments from Dirigo Properties, Incorporated to New England Telephone and Telegraph Company and Central Maine Power Company dated December 8, 1988 and recorded in Book 3473, Page 191 and dated February 16, 1989 and recorded in Book 3507, Page 194.

Parcel Two:

A certain lot or parcel of land situated westerly of Leighton Road in the City of Augusta, County of Kennebec and State of Maine, bounded and described as follows:

Starting at an iron pin set situated on the westerly side of Leighton Road at the southeasterly corner of Parcel C as depicted on plan entitled "Leighton Road Subdivision in the City of Augusta", prepared by Coffin Engineering & Surveying, dated February 9, 1989 and recorded April 18, 1989 under File No. D-89112 of the Kennebec County Registry of Deeds; thence S 70° 41' 48" W 238.4 feet to an iron pin set; thence S 53° 46' 22" W 161.22 feet to an iron pin set, being the point of beginning; thence S 53° 46' 22" W 52 feet, more or less, to an iron pin; thence N 61° 54' 00" W 596.90 feet to an iron pin found; thence N 42° 00' 18" E 73.36 feet to a point; thence N 16° 03' 04" E 34.28 feet to a point; thence N 07° 22' 12" W 64.06 feet to a point; thence N 13° 51' 13" W 134.25 feet to a point; thence N 51° 14' 26" W 212.25 feet, a portion of which follows a rock wall, to an iron pin found; thence N 25° 09' 00" E 360.1 feet, a portion of which follows a barb wire fence, to an iron pin found; thence N 29° 50' 00" E 319.2 feet, along a barb

wire fence, to an iron pin set; thence S 05° 01' 39" W 571.21 feet to an iron pin set; thence N 86° 17' 00" E 154.28 feet to an iron pin set and continuing along said course to another iron pin set which is located at the northwest corner of Parcel B as shown on the Plan referenced hereafter; thence S 05° 01' 00" E 375.10 feet to an iron pin set; thence S 27° 10' 49" E 339.88 feet to the point of beginning. Said parcel containing 8 acres, more or less.

The above-described parcel is the same parcel shown and referred to as "8 acre remainder" on plan entitled "Leighton Road Subdivision in the City of Augusta", prepared by Coffin Engineering & Surveying, dated February 9, 1989, and recorded April 18, 1989 under File No. D-89112 of the Kennebec County Registry of Deeds (the "Plan").

Reference may also be had to the deeds recorded in Book 4729, Page 151 and Book 4729, Page 153 as they affect the westerly boundary of the above described property.

Subject to all matters set forth on the Plan.

Excepting and reserving a perpetual right and easement for ingress and egress by Rockwood Development Corporation, its employees, agents, and invitees over, across and through the "Easement Area" hereafter defined located on the premises above described. The easement shall be for the purpose of providing access to and from all public roads or private roads to access land retained by Grantor, including Parcel D2 as shown on the Plan. The easement shall also include the right to install roadways and parking areas and includes the right and easement to rightfully maintain, build, repair and install all equipment and appurtenances necessary for all Utility Services as defined in accordance with 33 M.R.S.A. §458 over, under and across the Easement Area.

The Easement Area is more particularly described as follows: A sixty foot (60') wide strip of land, the easterly line of which commences at the northwest corner of parcel B as shown on the Plan and thence runs S 5°1'0" E 375.10 feet to an iron pin, thence continuing S 27°10'49" E 339.88 feet to a pin at property now or formerly of Ella Collins as shown on the Plan, and the westerly line of which shall be a line 60 feet distant from, and parallel to, the easterly line.

Meaning and intending to describe the premises conveyed in a deed from Rockwood Development Corporation to Blouin Motors, Inc., dated November 15, 2002 and recorded in the Kennebec County Registry of Deeds at Book 7163, Page 1.

Excepting and reserving from the above described parcel the property described as Parcel Two in a Warranty Deed from Blouin Motors, Inc. to Charles Shuman and Nancy B. Shuman, dated August 6, 2004, and recorded in the Kennebec County Registry of Deeds in Book 8066, Page 290.

Doc # 2007009577
Book 9314 Page 0321

Received Kennebec SS.
04/17/2007 10:56AM
Pages 6 Attest:
BEVERLY BUSTIN-HATHEWAY
REGISTER OF DEEDS

The above parcel is further conveyed subject to the following:

1. Terms and conditions of rights and easements as set forth in the Notice of Layout and Taking by the State of Maine dated October 12, 1966 and recorded in Book 1429, Page 433.

2. Terms and conditions of rights and easements as set forth in an instrument from Adeline M. Creasy to the State of Maine dated July 7, 1956 and recorded in Book 1052, Page 391.

3. Terms and conditions of rights and easements as set forth in the Notice of Layout and Taking by the State of Maine dated October 30, 1957 and recorded in Book 1096, Page 160, as affected by the Receipt and Confirmation of Taking dated February 11, 1958 and recorded in Book 1107, Page 232.

4. Terms and conditions of rights and easements as set forth in Warranty Deed from Rockwood Development Corporation to Blouin Motors, Inc., dated November 15, 2002 and recorded in Book 7163, Page 1, including the reserved sixty (60) foot wide right of way described therein.

5. Terms and conditions of appurtenant rights and easements as set forth in an instrument from Ella. A. Collins to John H. Shostak and Clara L. Shostak dated October 24, 1973 and recorded in Book 1687, Page 99.

6. Terms and conditions of appurtenant rights and easements as set forth in an instrument from John H. Shostak, Sr., and Clara L. Shostak to Rockwood Development Corporation dated June 6, 1989 and recorded in Book 3567, Page 167.

GDSI Pylons

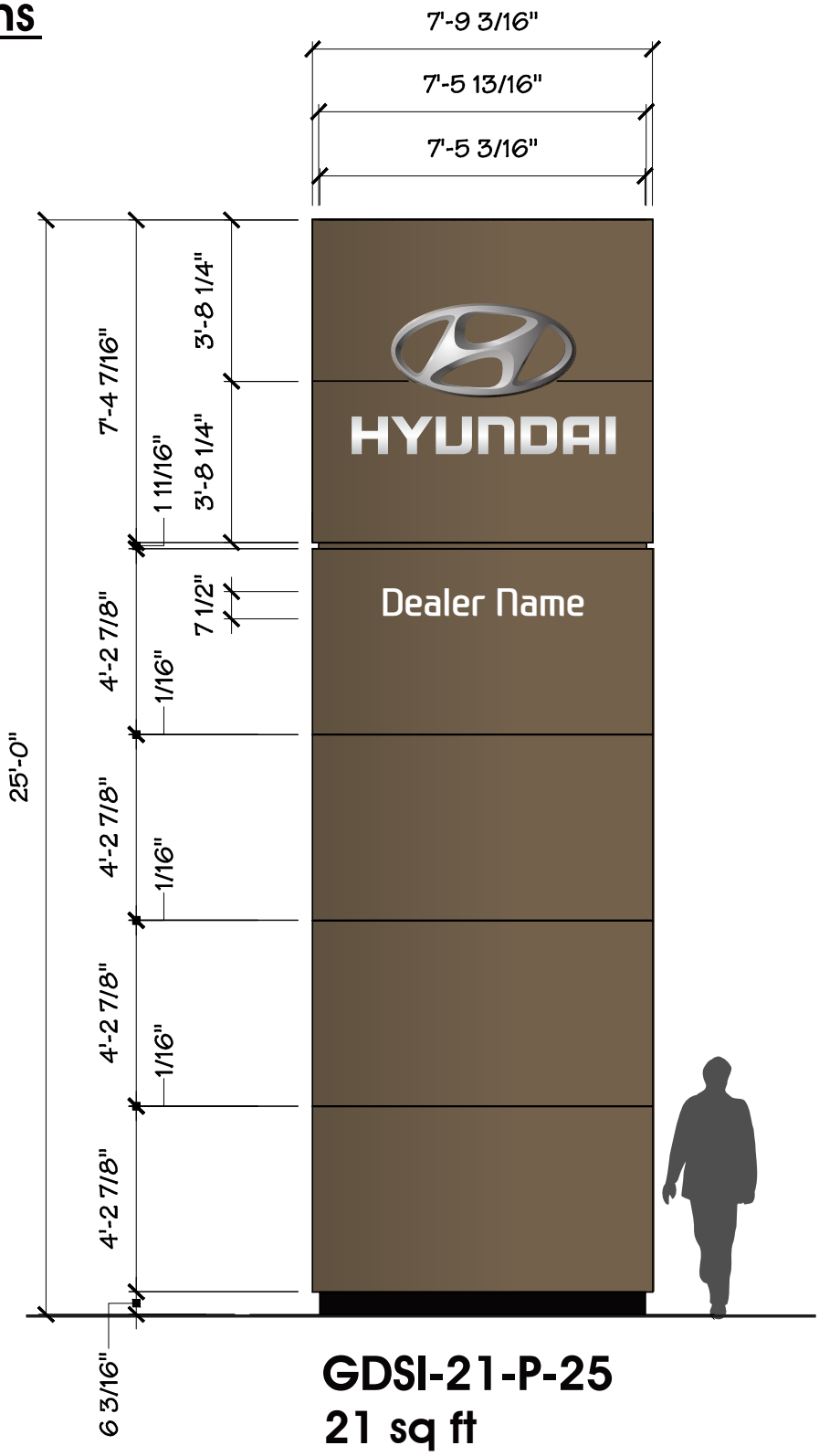

GDSI-21-P-25
21 sq ft

Site ID: Hyundai GDSI

Drawn by: MAH

AGI Rep: JWB

Scale: 1/4"=1'

Date: 7/1/15

This document is the sole property of Architectural Graphics, Inc. ,and all design, manufacturing, reproduction, use and sale rights regarding the same are expressly forbidden. It is submitted under a confidential relationship, for a special purpose, and the recipient, by accepting this document assumes custody and agrees that this document will not be copied or reproduced in whole or in part, nor its contents revealed in any manner or to any person except for the purpose for which it was tendered, nor any special features peculiar to this design be incorporated in other projects.

YOUR IMAGE. OUR PRIORITY.
Architectural Graphics, Inc.
2655 International Pkwy., Virginia Beach, VA 23452
PHONE: (757) 427-1900 - Fax (757) 430-1297
www.AGISign.com

LED GREENBRIAR® WALL SCONCE (XGBWM3)

Crossover® LED LIGHTING TECHNOLOGY

Shown with optional decal striping

US patent 7828456, 8002428 and CAN 2736757 & 2736757 and MX patent 29631 and ISRL 49679 and AUS 2008312668 and US & Int'l. patents pending

SMARTTEC™ ENERGY SAVING FEATURES:

THERMAL CONTROL - Sensors in both optical and driver enclosure reduce driver current when ambient temperatures exceed 50°C. Current is lowered in imperceptible 5% increments every 5 minutes until safe operating temperature is reached.

OPTIONAL INTEGRAL MOTION SENSOR - Passive infrared motion sensor activates switching of luminaire light levels. High level light is activated when passersby enter target zone and increased to full bright in 1-2 seconds. Low light level (30% of maximum drive current) is activated when target zone is absent of motion activity for 5 minutes and is gradually ramped down (10 seconds) to low level. Sensor detection range 110° horizontal x 93° vertical x 10 meters maximum distance.

EXPECTED LIFE - Minimum 60,000 hours to 100,000 hours depending upon the ambient temperature of the installation location. See LSI web site for specific guidance.

LEDS - Available with 28 or 48 select high-brightness LEDs in Cool White (5300°K nominal) or Neutral White (4200°K nominal) color temperature, 70 CRI (nominal).

OPTICS/DISTRIBUTIONS - Ultra-high efficiency reflectors provide three distributions. Choose from Wide Throw (WT), Forward Throw (FT) or Wall Wash (WW).

HOUSING - The aerodynamic aluminum housing is a rectangular shape. All mounting hardware is stainless steel or electro-zinc plated steel. Housing and optical unit are sealed with extruded silicone gasket; supply conductors with molded EPDM bushing.

OPTICAL UNIT - Clear tempered optical-grade flat glass lens sealed to the aluminum optic housing creates an IP67 rated unit. Pressure stabilizing breather allows super-tight protection while preventing cycling from building up internal pressures and vacuums that can stress optical unit seals.

WALL MOUNTING - Galvanized-steel universal wall mounting plate easily mounts directly to 4" octagonal or square junction box. EPDM gasket is supplied to be installed between mounting plate and junction box, sealing junction box from entrance of water. Universal plate permits fixture to be mounted in uplighting (indoor only) or downlighting position.

POLE MOUNTING - XPMA (for square) or XPMAR (for round) allows mounting to poles in single and D180 configurations. Use with 3" reduced drilling pattern.

ELECTRICAL - Two-stage surge protection (including separate surge protection built into electronic driver) meets IEEE C62.41.2-2002, Scenario 1, Location Category C. Available with universal voltage power supply 120-277VAC (50/60Hz input) or 347-480VAC.

DRIVER - Available in 350mA and 450mA drive currents (Drive currents are factory programmed). Components are fully encased in potting material for IP65 moisture resistance. Driver complies with IEC and FCC standards. Driver can be easily accessed and removed.

EMERGENCY OPTIONS - Integral emergency battery-back-up options are available. BB option operates in 0°C to 60°C ambient temperature and CWBB operates in -20°C to 60°C ambient temperature. When primary AC power failure occurs, both options operate 10 LEDs for minimum of 90 minutes.

OPERATING TEMPERATURE - -40°C to +50°C (-40°F to +122°F)

FINISH - LSI's DuraGrip® polyester powder coat finishing process withstands extreme weather changes without cracking or peeling. Guaranteed for five full years.

DECAL STRIPING - Optional color-coordinated decals in 9 standard colors to accent the fixture. Decals are guaranteed for five years against peeling, cracking, or fading.

WARRANTY - LSI LED fixtures carry a limited 5-year warranty.

PHOTOMETRICS - Application layouts are available upon request. Contact LSI Applications Group at lighting.apps@lsi-industries.com

SHIPPING WEIGHT (in carton) - 31 lbs./14Kg

LISTING - ETL listed to ANSI/UL 1598. UL8750 and other U.S. and international safety standards. Suitable for wet locations in downlight position.

LIGHT OUTPUT - XGBWM3

			Distribution/Lumens (Nominal)			
Milliamps		# of LEDs	Type FT	Type WT	Type WW	Watts
Cool White	350 mA	28	2300	2280	2580	33
		48	4020	3940	4180	53
	450 mA	28	2820	2740	3010	44
		48	4810	4680	4970	68
Neutral White	350 mA	28	2260	2190	2430	32
		48	3740	3570	3760	52
	450 mA	28	2660	2600	2850	41
		48	4420	4180	4450	67

This product, or selected versions of this product, meet the standards listed below.
Please consult factory for your specific requirements.

American Innovation American Made

IP67

DESIGNLIGHTS CONSORTIUM

CE ARRA Funding Compliant

RoHS COMPLIANT

ETL c US Intertek Suitable for wet locations

LSI Industries™ American Innovation Through Technology

Project Name _____ Fixture Type _____

Catalog # _____

04/15/13

© 2013 LSI INDUSTRIES INC.

LED GREENBRIAR® WALL SCONCE (XGBWM3)

Crossover® LED LIGHTING TECHNOLOGY

LUMINAIRE ORDERING INFORMATION

TYPICAL ORDER EXAMPLE: **XGBWM3 FT LED 48 450 CW UE WHT BB**

Prefix	Distribution	Light Source	# of LEDs	Drive Current	Color Temperature	Input Voltage	Finish	Options
XGBWM3 - LED Greenbriar Wall Sconce	WT - Wide Throw FT- Forward Throw WW - Wall Wash	LED	28 48	350 - 350mA 450 - 450mA	CW - Cool White NW - Neutral White	UE - Universal Voltage (120-277) 347-480	BLK - Black BRZ - Bronze GPT - Graphite MSV - Metallic Silver PLP - Platinum Plus SVG - Satin Verde Green WHT - White	BB - Battery Back-up[1] CWBB - Cold Weather Battery Back-up[1] IMS - Integral Motion Sensor PCI120 - 120V Button Type Photocell PCI208 - 208V Button Type Photocell PCI240 - 240V Button Type Photocell PCI277 - 277V Button Type Photocell PCI347 - 347V Button Type Photocell XPMA - Pole Mount Adaptor for use with Square Pole (for single or D180 mounting configuration only)[2] XPMAR - Pole Mount Adaptor for use with Round Pole (for single or D180 mounting configuration only)[2] TP - Tamper Proof[3] **Color Decals** 45 - Light Gold Metallic 20 - Charcoal Metallic 94 - Blue Metallic 21 - Tomato Red 700 - Aztec Silver Metallic 55 - Black 50 - White 51 - Dark Red 59 - Dark Green

NOTES:
1 - Available with UE voltage only
2- Designed with 3" reduced drilling pattern. For S or D180 mounting configuration only.
3- Tamper-proof Screwdriver must be ordered separately. (See Accessory Ordering Information.)

ACCESSORY ORDERING INFORMATION (Accessories are field installed)

Description	Order Number
XGBWM3 PLS - Polycarbonate Shield	172787
XGBWM3 SW BLK - Surface Wiring Box	173156BLK+
SCD - Tamper-proof Screwdriver	477974
FK120 - Single Fusing	FK120++
FK277 - Single Fusing	FK277++
DFK208, 240 - Double Fusing	DFK208,240++
DFK480 - Double Fusing	DFK480++
FK347 - Single Fusing	FK347++

NOTES:
+SW BLK not compatible with XPMA or XPMAR option. Available in black only.
++Fusing to be installed in a compatible junction box supplied by contractor.

DIMENSIONS

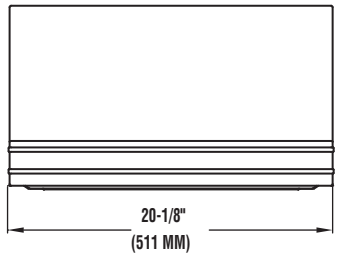

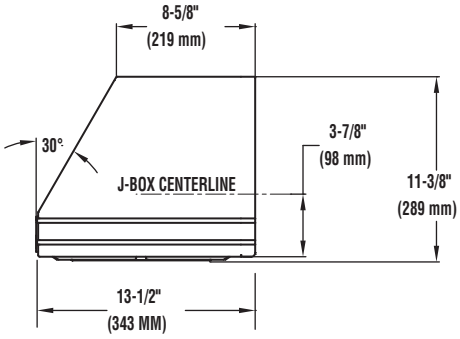

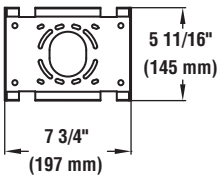

Universal Mounting Plate

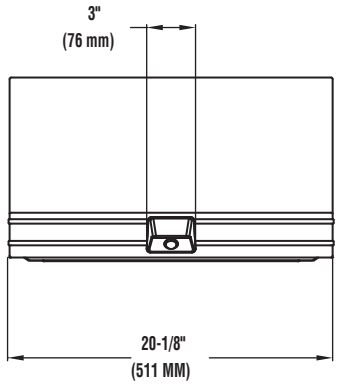

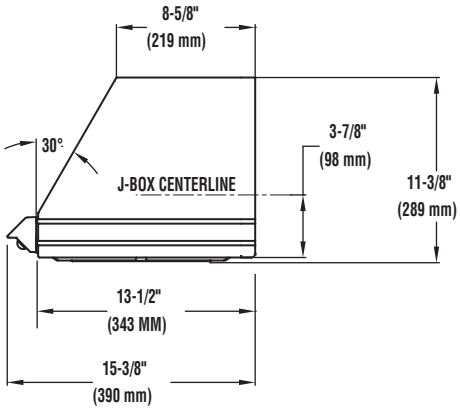

Shown with IMS option

© 2013
LSI INDUSTRIES INC.

LED AREA LIGHTS - (XGBM)

Crossover® LED LIGHTING TECHNOLOGY

Shown with optional decal striping

DOE LIGHTING FACTS

Department of Energy has verified representative product test data and results in accordance with its Lighting Facts Program. Visit www.lightingfacts.com for specific catalog strings.

LIGHT OUTPUT - XGBM

		Lumens (Nominal) Type 3	Type 5	Type FT	Type FTA	Watts (Nominal)
Cool White	LW	14080	13840	15020	16560	140
	SS	20180	18040	20700	23030	187
	HO	26750	25460	29070	31810	300
Neutral White	LW	11450	11290	12220	13470	136
	SS	16390	15170	17230	18750	188
	HO	22240	20550	23510	25410	288

LED Chips are frequently updated therefore values may increase.

This product, or selected versions of this product, meet the standards listed below. Please consult factory for your specific requirements.

American Innovation — American Made; RoHS COMPLIANT; FC; CE; c UL us LISTED wet location; ARRA Funding Compliant; IP67; DLC; ida

Fixtures comply with ANSI C136.31-2010 American National Standard for Roadway Lighting Equipment - Luminaire Vibration 3G requirements.

US patent D574994 & 7,828,456 and MX patent 29631 and US & Int'l. patents pending

SMARTTEC™ THERMAL CONTROL - LSI drivers feature integral sensor which reduces drive current when ambient temperatures exceed rated temperature.

OCCUPANCY SENSING (IMS) – Optional integral passive infrared motion sensor activates switching of luminaire light levels. High level light is activated and increased to full bright in 1-2 seconds upon detection of motion. Low light level (30% maximum drive current) is activated when target zone is absent of motion activity for ~2 minutes and ramps down (10-15 seconds) to low level to allow eyes time to adjust. Sensor is located on the front of optical assembly and rotates with the optic. Sensor optic has a detection cone of approximately 45˚. Examples of detection – occurs 30' out from a 30' mounting height pole; occurs 20' out from a 20' mounting height pole.

ENERGY SAVING CONTROL OPTIONS – DIM – 0-10 volt dimming enabled with controls by others. BLS – Bi-level switching responds to external line voltage signal from separate 120-277V controller or sensor (by others), with low light level decreased to 30% maximum drive current.

EXPECTED LIFE - Minimum 60,000 hours to 100,000 hours depending upon the ambient temperature of the installation location. See LSI web site for specific guidance.

LEDS - Select high-brightness LEDs in Cool White (5000K) or Neutral White (4000K) color temperature, 70 CRI.

DISTRIBUTION/PERFORMANCE - Types 3, 5, FT and FTA available - field rotatable reflectors.

HOUSING - Square, die-formed aluminum. Fully enclosed weather-tight housing contains factory prewired drivers and field connections.

TOP-ACCESS COVER - Gasketed, tethered top-access cover provides ease of installation and allows for easy driver access. Four captive stainless-steel fasteners secure the top-access cover to the housing.

OPTICAL UNIT - Clear tempered optical grade flat glass lens sealed to aluminum housing creates an IP67 rated, sealed optical unit (includes pressure stabilizing breather). Optical unit can be easily field rotated in 90o increments. Directional arrow on optics allows alignment without the unit being energized.

MOUNTING - 2-1/2" x 5-3/8" x 12" extruded aluminum arm mounting bracket shipped standard. Use with 5" traditional drilling pattern. Round Pole Plate (RPP2) required for mounting to 3"– 5" round poles. (See Accessory Ordering Information chart.)

ELECTRICAL - Two-stage surge protection (including separate surge protection built into electronic driver) meets IEEE C62.41.2-2002, Location Category C. Available with universal voltage power supply 120-277VAC (UE - 50/60Hz input), and 347-480VAC.

DRIVERS - Available in Low Watt (LW), Super Saver (SS) and High Output (HO) drive currents (Drive currents are factory programmed). Components are fully encased in potting material for moisture resistance. Driver complies with FCC 47 CFR part 15 RFI/EMI standard.

OPERATING TEMPERATURE - -40°C to +50°C (-40°F to +122°F).

FINISH - Fixtures are finished with LSI's DuraGrip® polyester powder coat finishing process. The DuraGrip finish withstands extreme weather changes without cracking or peeling.

DECAL STRIPING - LSI offers optional color-coordinated decals in 9 standard colors to accent the fixture. Decals are guaranteed for five years against peeling, cracking, or fading.

WARRANTY - LSI LED fixtures carry a limited 5-year warranty.

PHOTOMETRICS - Please visit our web site at www.lsi-industries.com for detailed photometric data.

SHIPPING WEIGHT (IN CARTON) - Fixture - 44.5 lbs (20 kg) Arm - 5 lbs. (2kg) arm

LISTING - UL listed to U.S. and Canadian safety standards. Suitable for wet locations. For a list of the specific products in this series that are DLC listed, please consult the LED Lighting section of our website or the Design Lights website at www.designlights.org.

LSI Industries™

Project Name _____ **Fixture Type** _____

Catalog # _____

04/30/15

© 2015 LSI INDUSTRIES INC.

LED AREA LIGHTS - (XGBM)

Crossover® LED LIGHTING TECHNOLOGY

LUMINAIRE ORDERING INFORMATION

TYPICAL ORDER EXAMPLE: **XGBM 5 LED HO CW UE WHT VCM ES**

Prefix	Distribution	Light Source	Drive Current	Color Temperature	Input Voltage	Finish	Optional Controls	Optional Sensor/Options
XGBM[1] - LED Greenbriar	FT - Forward Throw FTA - Forward Throw Automotive 3 - Type III 5 - Type V	LED	LW - Low Watt SS - Super Saver HO - High Output	CW - Cool White (5000K) NW - Neutral White (4000K)	UE - Universal Voltage (120-277) 347-480	BLK - Black BRZ - Bronze GPT - Graphite MSV - Metallic Silver PLP - Platinum Plus SVG - Satin Verde Green WHT - White **Optional Color Decals** 45 – Light Gold 20 – Charcoal Metallic 55 – Black 94 – Blue Metallic 59 – Dark Green 51 – Dark Red 21 – Tomato Red 50 – White 700 – Aztec Silver Metallic	**Wireless Control System[2]** (blank) - None PCM - Platinum Control System PCMH - Host/Satellite Platinum Control System GCM - Gold Control System GCMH - Host/Satellite Gold Control System DIM - 0-10 volt dimming (required for satellite fixtures) **Stand-Alone Control** (blank) - None DIM - 0-10 volt dimming[3] (from external signal) BLS - Bi-level Switching[4] (from external signal - required 120-277V controls system voltage)	**Sensor** IMS - Integral Motion Sensor[5] PCI120 - 120V Button-Type Photocell PCI208 - 208V Button-Type Photocell PCI240 - 240V Button-Type Photocell PCI277 - 277V Button-Type Photocell PCI347 - 347V Button-Type Photocell **Options** 8BK - 8" Bracket (S and D180 only) TB - Terminal Block

LUMINAIRE EPA CHART[2] - XGBM

	8" Bracket	12" Bracket
Single	2.3	2.4
D180°	4.7	4.8
D90°	12" Bracket Required	4.7
T90°		7.2
TN120°		7.3
Q90°		8.8

Note: House Side Shield adds to fixture EPA. Consult Factory.

ACCESSORY ORDERING INFORMATION[6]

(Accessories are field installed)

Description	Order Number	Description	Order Number
XGBM-HSS House Side Shield (Black only)	482002 BLK[7]	DFK208, 240 Double Fusing (208V, 240V)	DFK208,240[8]
RPP2 - Round Pole Plate	162914BLK	DFK480 Double Fusing (480V)	DFK480[8]
BKS-BO-WM-*-CLR - Wall Mount Plate	123111CLR	FK347 Single Fusing (347V)	FK347[8]
BKA-BO-RA-8-CLR - Radius Arm	169010CLR	PMOS120 - 120V Pole-Mount Occupancy Sensor	518030CLR[9]
BKU-BO-S-19-CLR - Upsweep Bracket for round or square poles	144191CLR	PMOS208/240 - 208, 240V Pole-Mount Occupancy Sensor	534239[9]
FK120 Single Fusing (120V)	FK120[8]	PMOS277 - 277V Pole-Mount Occupancy Sensor	518029CLR[9]
FK277 Single Fusing (277V)	FK277[8]	PMOS480 - 480V Pole-Mount Occupancy Sensor	534240[9]

FOOTNOTES:

1- Use with 5" traditional drilling pattern.
2- Requires a SiteManager and override switch. Not compatible with BLS or IMS option.
3- Not compatible with IMS or BLS option.
4- Not compatible with wireless controls system, DIM or IMS option.
5- Not compatible with wireless controls system, DIM or BLS option.
6- For wireless controls accessories, see Controls section.
7- House Side Shields add to fixture EPA. Consult factory.
8- Fusing must be located in the hand hole of pole.
9- To be used with any of the PCM/GCM wireless controls systems in the fixture. Consult factory.

DIMENSIONS

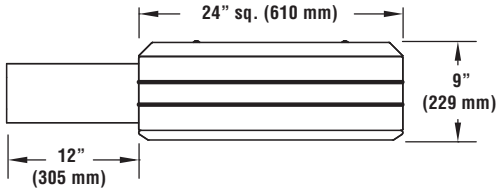

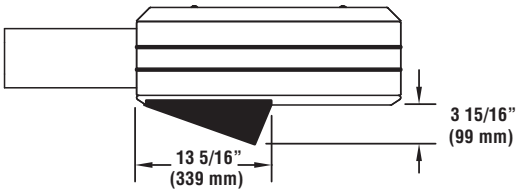

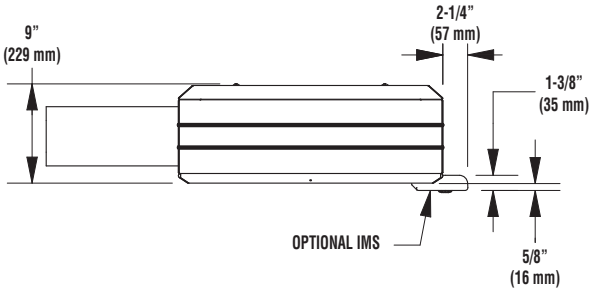

House Side Shield (482002BLK)

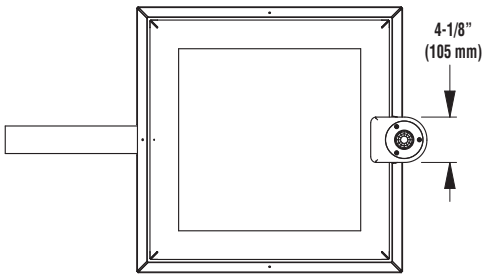

© 2015
LSI INDUSTRIES INC.

STEEL SQUARE POLES

POLE SHAFT - Pole shaft is electro-welded ASTM-A500 Grade C steel tubing with a minimum yield strength of 50,000 psi. On Tenon Mount steel poles, tenon is 2-3/8" O.D. high-strength pipe. Tenon is 4-3/4" in length. Straight poles are 4", 5", and 6" square.

HAND-HOLE - Standard hand-hole location is 12" above pole base. Poles 22' and above have a 3" x 6" reinforced hand-hole. Shorter poles have a 2" x 4" non-reinforced hand-hole.

BASE - Pole base is ASTM-A36 hot-rolled steel plate with a minimum yield strength of 36,000 psi. Two-piece square base cover is optional.

ANCHOR BOLTS - Poles are furnished with anchor bolts featuring zinc-plated double nuts and washers. Galvanized anchor bolts are optional. Anchor bolts conform to ASTM-A36 with a minimum yield strength of 36,000 psi.

GROUND LUG - Ground lug is standard.

DUPLEX RECEPTACLE - Weatherproof duplex receptacle is optional.

GROUND FAULT CIRCUIT INTERRUPTER - Ground fault circuit interrupter is optional.

FINISHES - Each pole is finished with LSI's DuraGrip® baked-on polyester-powder finishing process to give the pole an exceptionally attractive appearance. The process electrostatically applies and thermally fuses a polyester powder to the pole. This unique protection process provides an extremely smooth and uniform finish which withstands extreme weather changes without cracking or peeling. DuraGrip finish features a two-year limited warranty. Standard finish colors available for poles are bronze, black, platinum plus, buff, white, satin verde green, metallic silver, and graphite. Optional DuraGrip® Plus features added protection with a 3.0 to 5.0 mil thickness of polyester-powder finish plus an inner coating. This specially developed inner coating is a thermal plastic hydrocarbon resin applied to the inside of the pole to seal and protect against atmospheric and corrosive matter. DuraGrip Plus finish features a five-year limited warranty.

DETERMINING THE LUMINAIRE/POLE COMBINATION FOR YOUR APPLICATION:

- Select luminaire from Luminaire Ordering Information.
- Select bracket configuration.
- Refer to Luminaire EPA Chart to determine EPA value.
- Select Height of pole.
- Select MPH to match the wind speed in the application area. (Windspeed Map located in Appendix)
- Confirm the pole EPA that is equal to or exceeds the luminaire/bracket EPA as was previously determined.

POLE SELECTION CHART: 4"(102mm), 5"(127mm) and 6"(152mm) steel square poles

Height	EPA				Outside Dimensions	Material	Bolt Circle
	70 MPH	80 MPH	90 MPH	100 MPH			
14' (4.3m)	23.3	16.7	12.2	9.0	4" (102mm)	S11G	B
16' (4.9m)	18.6	13.1	9.3	6.5	4" (102mm)	S11G	B
16' (4.9m)	34.6	25.0	18.5	13.8	5" (127mm)	S11G	C
18' (5.5m)	14.4	9.7	6.5	4.2	4" (102mm)	S11G	B
18' (5.5m)	27.9	19.7	14.1	10.1	5" (127mm)	S11G	C
20' (6.1m)	11.0	7.0	4.2	2.2	4" (102mm)	S11G	B
20' (6.1m)	18.7	12.8	8.8	5.9	4" (102mm)	S07G	B
20' (6.1m)	22.5	15.4	10.5	7.0	5" (127mm)	S11G	C
20' (6.1m)	35.5	25.4	18.4	13.4	5" (127mm)	S07G	D
22' (6.7m)	10.4	6.3	3.4	1.4	4" (102mm)	S11G	B
22' (6.7m)	18.7	12.6	8.4	5.4	4" (102mm)	S07G	B
22' (6.7m)	20.8	13.8	8.9	5.5	5" (127mm)	S11G	C
22' (6.7m)	34.0	23.9	17.0	12.0	5" (127mm)	S07G	D
24' (7.3m)	7.7	4.0	1.5	—	4" (102mm)	S11G	B
24' (7.3m)	15.1	9.7	6.0	3.3	4" (102mm)	S07G	B
24' (7.3m)	16.7	10.5	6.2	3.1	5" (127mm)	S11G	C
24' (7.3m)	28.6	19.6	13.4	8.9	5" (127mm)	S07G	D
24' (7.3m)	46.2	32.6	23.2	16.6	6" (153mm)	S07G	J
26' (7.9m)	5.3	2.1	—	—	4" (102mm)	S11G	B
26' (7.9m)	12.0	7.2	3.9	1.5	4" (102mm)	S07G	B
26' (7.9m)	13.2	7.6	3.8	1.0	5" (127mm)	S11G	C
26' (7.9m)	24.0	15.8	10.3	6.3	5" (127mm)	S07G	D
26' (7.9m)	39.6	27.3	18.9	12.9	6" (152mm)	S07G	J
28' (8.5m)	19.9	12.5	7.5	3.9	5" (127mm)	S07G	D
28' (8.5m)	33.9	22.7	15.1	9.6	6" (152mm)	S07G	J
30' (9.1m)	16.3	9.6	5.0	1.7	5" (127mm)	S07G	D
30' (9.1m)	28.8	18.6	11.6	6.6	6" (152mm)	S07G	J
35' (10.7m)	18.3	10.0	4.3	—	6" (152mm)	S07G	J
39' (11.9m)	11.5	4.3	—	—	6" (152mm)	S07G	J

Refer to EPA information on next page.
If luminaire weight exceeds 250 lbs.(113.4kg), consult factory
For applications in Florida or Canada, consult factory

DIMENSIONS

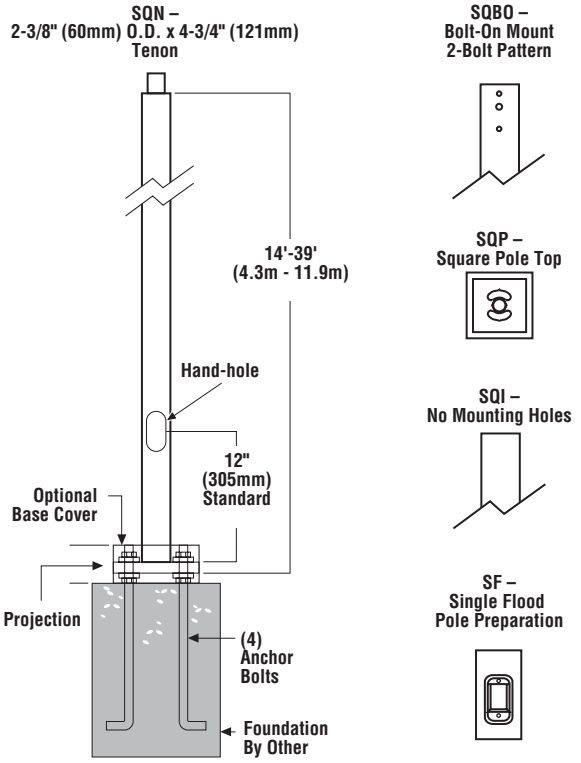

DRILLING LOCATIONS

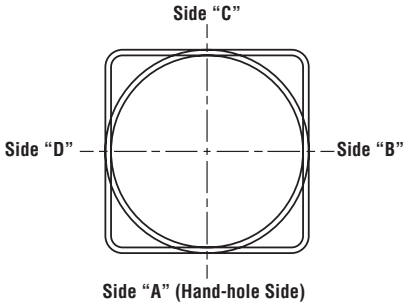

Sides	A	B	C	D
Hand-hole	X			
Single	X			
D180°		X		X
D90°	X			X
T90°	X	X		X
TN120°*	X			
Q90°	X	X	X	X
Single FBO	X			
Double FBO		X		X

*Other two locations will be 120° to the left and right of Side A.

Note: Consult factory for custom variations. Standard SF and DF pole preparations are located 3/4 of the height of the pole from the base, unless otherwise specified.

SHIPPING WEIGHTS - Steel Square Poles

4"(102mm) sq. 11 Ga. is approximately	7.50 lbs./ft.
4"(102mm) sq. Ga. is approximately	10.00 lbs./ft.
5"(127mm) sq. Ga. is approximately	9.00 lbs./ft.
5"(127mm) sq. Ga. is approximately	12.50 lbs./ft.
6"(152mm) sq. Ga. is approximately	15.40 lbs./ft.
Anchor Bolts (3/4" x 30")(19mm x 762mm)	15 lbs. (7kg)/set
Anchor Bolts (1" x 36")(25mm x 914mm)	30 lbs. (14kg)/set

© 2007
LSI INDUSTRIES INC.

STEEL SQUARE POLES

ORDERING INFORMATION

Pole Series	Material	Height[1]	Mounting Configuration	Pole Finish	Options
Square pole for Bolt-on mount 2-Bolt Pattern 4SQBO 5SQBO 6SQBO	S11G – 11 Ga. Steel S07G – 07 Ga. Steel	14' 16' 18' 20' 22' 24' 26' 28' 30' 35' 39'	S – Single/Parallel D180° – Double D90°– Double DN90°– Double T90°– Triple TN120°– Triple Q90°– Quad QN90°– Quad	BRZ – Bronze BLK – Black PLP – Platinum Plus BUF – Buff WHT – White SVG – Satin Verde Green GPT – Graphite MSV - Metallic Silver	GA – Galvanized Anchor Bolts SF – Single Flood[3] DF – Double Flood[3] DGP – DuraGrip® Plus LAB – Less Anchor Bolts
Square Pole for Pole Top Mount 4SQP 5SQP 6SQP			PT – Pole Top Mount		**Standard SF and DF pole preparations are located 3/4 of the height of the pole from the base, unless otherwise specified**
Square Pole for Tenon Mount 4SQN 5SQN 6SQN	**Consult Pole Selection Chart on opposite page**		N – Tenon Mount (Standard tenon size is 2-3/8" O.D.)		
Square Pole (No mounting holes No pole top caps) 4SQI 5SQI			I – For use with Internal Slip-Fitter[2]		

5SQBO	S07G	24	D180	PLP	SF	DGP

EXAMPLE OF A TYPICAL ORDER

FOOTNOTES:

1- Pole Heights will have +/- 1/2" tolerance
2- See Area Lighting Brackets Section.
3- See Flood Lighting Brackets Section.

ACCESSORY ORDERING INFORMATION

(Accessories are field installed)

Description	Order Number
4BC – 4" Square Base Cover	122559CLR
5BC – 5" Square Base Cover	122561CLR
6BC – 6" Square Base Cover	122563CLR
ER2 – Weatherproof Duplex Receptacle	122566CLR
GFI – Ground Fault Circuit Interrupter	122567CLR
MHP – Mounting Hole Plugs (3 plugs)	132336
Vibration Damper - 4" Square Pole	172539
Vibration Damper - 5" Square Pole	172538
Vibration Damper - 6" Square Pole	178361

BOLT CIRCLE

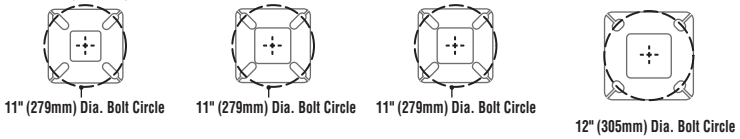

	B	C	D	J
Bolt Circle	Slotted 8"-11" (203mm-279mm)	Slotted 9"-11" (229mm-279mm)	Slotted 9"-11" (229mm-279mm)	Slotted 12" (305mm)
Anchor Bolt Size	3/4" x 30" (19mm x 762mm)	3/4" x 30" (19mm x 762mm)	1" x 36" (25mm x 914mm)	1" x 36" (25mm x 914mm)
Anchor Bolt Projection	3-1/4" (83mm)	3-1/4" (83mm)	4" (102mm)	4" (102mm)
Base Plate Opening for Wireway Entry	3-5/8" (92mm)	4-3/4" (121mm)	4-5/8" (117mm)	5-5/8" (143mm)
Base Plate Dimensions	10-1/8" sq. x 3/4" thk. (257mm x 19mm)	10-1/8" sq. x 3/4" thk. (257mm x 19mm)	10-1/8" sq. x 1" thk. (257mm x 25mm)	12" sq. x 1-1/8" thk. (305mm x 29mm)

Note: Base plate illustrations may change without notice. Do not use for setting anchor bolts.
Consult factory for the base plate templates.

EPA INFORMATION

All LSI Lighting Systems' poles are guaranteed to meet the EPA requirements listed. LSI Lighting Systems is not responsible if a pole order has a lower EPA rating than the indicated wind-loading zone where the pole will be located.
CAUTION: This guarantee does not apply if the pole/bracket/fixture combination is used to support any other items such as flags, pennants, or signs, which would add stress to the pole. LSI Lighting Systems cannot accept responsibility for harm or damage caused in these situations.

NOTE: Pole calculations include a 1.3 gust factor over steady wind velocity. Example: poles designed to withstand 80 MPH steady wind will withstand gusts to 104 MPH. EPAs are for locations 100 miles away from hurricane ocean lines. Consult LSI for other areas. Note: Hurricane ocean lines are the Atlantic and Gulf of Mexico coastal areas. For applications in Florida or Canada, consult factory.

© 2007
LSI INDUSTRIES INC.

SECTION 12

STORMWATER MANAGEMENT

A. NARRATIVE

The Darling's Corporation project is the construction of a new automobile dealership building adjacent to the existing dealership building. The site currently has a Site Location of Development Act (SLODA) permit. As part of this SLODA amendment application, Darling's Corporation (Darling's) proposes a project with a building footprint of 28,500 square feet, to replace the existing dealership building. To allow for the business to remain open, the new dealership building will not occupy the same footprint as the existing dealership building. Parking will be relocated, but access from the adjacent street to the new building will be in the same location as presently exists.

The proposed development project covers 4.3 acres of the Darling's Corporation property. There is no change in the amount of the site developed area, and the amount of impervious will be decreased by approximately 2,853 square feet with the increase of buffer area on the southern part of the site adjacent to the roadway. The project's impervious surface change from building to paved parking and paved parking to building will be treated with a wet pond. Treatment of the change of use area of approximately 45,364 square feet will be accomplished to the greatest extent possible by regrading portions of the existing wet pond to allow for three feet of mean depth and a pipe within the wet pond to allow for temperature control.

Basic Standard Submission: Information is provided as required for the Basic Standard Submission in Section 14.0 Basic Standards.

General Standards Submission: The following information is provided as required in the General Standard Submission.

1. Narrative: The project, located at the Darling's Corporation site in Augusta, Maine, includes the proposed construction of an impervious surface change of use of 45,364 square feet and an overall impervious surface decrease of approximately 2,583 square feet. Access to the site will not be altered by the proposed project. The proposed project will involve activity on approximately 4.3 acres that will be stabilized with pavement, building, vegetation, or other permanent measures by project completion.

2. Drainage Plans: A Post Development Drainage Plan is provided in Section 12B under the Stormwater Management Quantity Report portion of this Application. This plan includes subwatershed limits utilized to design and size stormwater conveyance structures and size erosion control measures, hydrologic flow lines, and SCS Soils groups. The site is served by an existing storm water collection system with excess capacity.

3. Calculations: Stormwater runoff calculations are provided in Section 12B under the Stormwater Management Quantity Report portion of this Application. These calculations were performed utilizing HydroCAD 10.0. The proposed wet pond was sized to the greatest extent possible in accordance with published information from the Maine Department of Environmental Protection (MDEP) Stormwater BMP Technical Design Manual.

4. Details, Designs, and Specifications: We propose to use a wet pond to treat stormwater quality. This installation will provide runoff quantity attenuation which is modeled in the HydroCAD 10.0 model. Details to assist the contractor by showing the proposed sections of the treatment device are provided herein.

Flooding Standard Submission: The following information is provided as required in the Flooding Standard Submission.

1. Control of Peak Flows: The project is required to meet Flooding standards as the site proposes development of greater than three acres of impervious area. The Pre and Post-development Hydrology models and narrative are located in Section 12B.

2. Details, Designs, and Specifications: The model runoff calculations used to size the wet pond are located in Section 12B under the Stormwater Management Quantity Report and include analysis performed using HydroCAD 8.5. This model includes runoff curve number computations and time of concentration calculations.

SECTION 12A

STORMWATER QUALITY CONTROL NARRATIVE

The proposed Darling's Corporation project has a building footprint of 25,800 square feet which will be located on what is currently paved parking. The existing building is approximately 19,564 square feet and will be replaced by paved parking. The overall change in impervious area on the site will be a decrease of approximately 2,856 square feet at the southern edge of the site, where the City of Augusta has requested a buffer in this area.

The project is located north of Old Winthrop Road in Augusta, Maine. The site is in the Kennebec River watershed. The Chapter 500 Storm Water Management Standards require this project to meet basic, general, and flooding standards. Basic standards as outlined in Appendices A, B, and C of Chapter 500 include: erosion and sedimentation control; inspection; and maintenance and housekeeping; respectively, and are addressed in Section 14.

General standards require a minimum of 95% of the impervious area and 80% of the developed area associated with a project to receive treatment measures. This project intends to satisfy the requirement by treating the proposed new development area with the existing wet pond. The existing wet pond will be reconfigured to allow for a permanent pool mean depth of three feet, and temperature controls will be provided through a perforated pipe at the base of the wet pond.

The wet pond has been reconfigured to capture runoff from the entire area that drains to it and provide for three feet of mean depth. The wet pond is being designed with a perforated pipe at the base of the pond in lieu of a gravel bench to provide for temperature controls. The following charts summarize the impervious and developed area proposed to be permitted by the project, as well as the treatment structure, area treated, and relationship with the total developed and impervious areas for the project.

PROPOSED DEVELOPMENT	IMPERVIOUS AREA	DEVELOPED AREA
Change of Use Building to Pavement or Pavement to Building	45,364 SF	45,364 SF
Total Area	**45,364 SF**	**45,364 SF**

TREATMENT METHOD	IMPERVIOUS AREA TREATED	DEVELOPED AREA TREATED
Wet Pond	45,364 SF	45,364 SF
Total Area Treated	**45,364 SF**	**45,364 SF**
Percent Treated of Areas	**100.00%**	**100.00%**

A description of the treatment systems follows.

1. **Wet Pond:** The existing wet pond will be reconfigured to control stormwater runoff from the project. The pond has been designed to provide flood control as well as water quality treatment. The pond has been designed to maintain a permanent pool mean depth of three feet. Outlet structures will be constructed above this elevation to encourage plug flow through the pond and maximize settlement of pollutants. Calculating the size required for the mean depth is provided below.

Mean Depth Calculation: The mean depth is defined in Chapter 4 of the MDEP Stormwater BMP Manual as the pond volume (measured at one foot below permanent pool elevation) divided by the surface area at that elevation.

Pond Sizing (Calculation performed using HydroCAD 10.0):

ELEVATION	SURFACE AREA	CUMULATIVE VOLUME
281.00	472 SF	0 CF
282.00	880 SF	676 CF
283.00	1,352 SF	1,792 CF
284.00	1,846 SF	3,391 CF
285.00	2,373 SF	5,501 CF
286.00	2,938 SF	8,156 CF
286.55	3,271 SF	9,867 CF
287.00	3,544 SF	11,397 CF
287.55[(1)]	3,883 SF	13,402 CF
288.00	4,172 SF	15,255 CF
289.00	4,817 SF	19,750 CF
290.00	5,494 SF	24,905 CF
291.00	6,255 SF	30,780 CF
292.00	7,022 SF	37,418 CF

[(1)] Permanent Pool Elevation

Mean Depth = 9,867 CF / 3,271 SF = 3.02 FT

Channel Protection Volume: Chapter 500 sizing to calculate the channel protection volume is based on Chapter 4 the *MDEP Stormwater BMPs Technical Design Manual Volume III*. For 45,364 square feet of impervious area and 45,364 square feet of developed area the required channel protection volume is calculated to be:

(1.0 inches x 45,364 sf) + (0.4 inches x 0 sf) = 3,780 cf

Based on a permanent pool elevation of 287.55 feet and the outlet control structure inlet of 288.00, the channel protection volume provided is 1,853 cf. The 1,853 cf is approximately 49% of the required channel protection volume.

The proposed stormwater quality control devices have been designed according to the standards outlined in the *Stormwater Management for Maine, Volume III BMP Manual*, January 2006 and revised April 2007. Construction and maintenance will be according to standards outlined in this manual.

SECTION 12B

STORMWATER MANAGEMENT QUANTITY REPORT

As stated, the project is required to meet the flooding standard under Chapter 500 Section 4.E (2)(a). HydroCAD calculations can be found at the end of this section. The pre and post development conditions for the project are described below.

Pre Development / Existing Conditions and Drainage

The existing Darling's Corporation development in Augusta is approximately 6.95 acres of developed area. The site has a SLODA permit, and runoff from the site drains northeast to an existing wet pond that was sized in accordance with the current stormwater BMP standards at that time. The outlet from the pond drains to a drainage swale adjacent to the site, and the runoff ultimately flows to the Kennebec River. The flow from the wet pond is identified as Reach 3R – Design Point.

The pre development/existing conditions are based on the post development/designed conditions by SJR Engineering in March of 2002. For comparison purposes, the pond and design point identification tags were maintained during the stormwater modeling completed by CES, Inc., and the pre development summation analysis point information is from the report prepared by SJR Engineering dated March 25, 2002.

Post Development/Proposed Conditions

The Darling's Corporation project includes a new 25,800 square foot building for retail space and vehicle maintenance. Primary access to the new building will remain off Old Winthrop Road, and the change of use impervious area created for the new parking and building area will be approximately 45,364 square feet, and will be treated by reconfiguring the existing wet pond to provide three feet of mean depth and allow for channel protection volume. The treatment will be configured to attenuate for quantity increases as well.

Post Development Drainage

The post developed site is broken up into twelve watersheds. Subareas 1 through 6 and Subarea 8 include the parking lot area west of the proposed building and drain to a stormwater collection system. Subareas 9 and 10 include the parking lot area north of the proposed building and drain southerly to a stormwater collection system. Subarea 11 includes the proposed building. Runoff from the building is collected in roof drains and outlets to the same stormwater collection system as the ones that collect stormwater from Subareas 1 through 10. Subarea 7 includes the parking lot area south of building and drains to a stormwater collection system that drains to the wet pond. Subarea 12 includes the existing developed area east of the proposed development and drains by overland flow to the wet pond. The wet pond discharges a controlled flow north of the Darling's Corporation development in a ditch that ultimately flows to the Kennebec River. The flow from the wet pond is identified as Reach 3R – Design Point.

A comparison of pre and post development flows for the project at the analysis points follows.

24 HOUR, TYPE III DURATION STORM			
	2 YEAR PRE/POST	10 YEAR PRE/POST	25 YEAR PRE/POST
Reach 3R – Design Point	6.62 cfs / 6.77 cfs	13.45 cfs / 10.73 cfs	17.23 cfs / 15.35 cfs

Post Development Analysis

The results of the analysis for this site indicate that there is a slight increase of 0.15 cfs for the 2-year storm event, but a reduction in runoff for all other storm events. The wet pond is sized adequately to handle storm water runoff from a 25-year storm event. The results also indicate that the grading plan for the site and use of treatment structures will stagger stormwater arrival times to the off-site summation points resulting in no significant increase in off-site peak flows occurring for the 2, 10, and 25 year storm events.

POST DEVELOPMENT - 2 YEAR

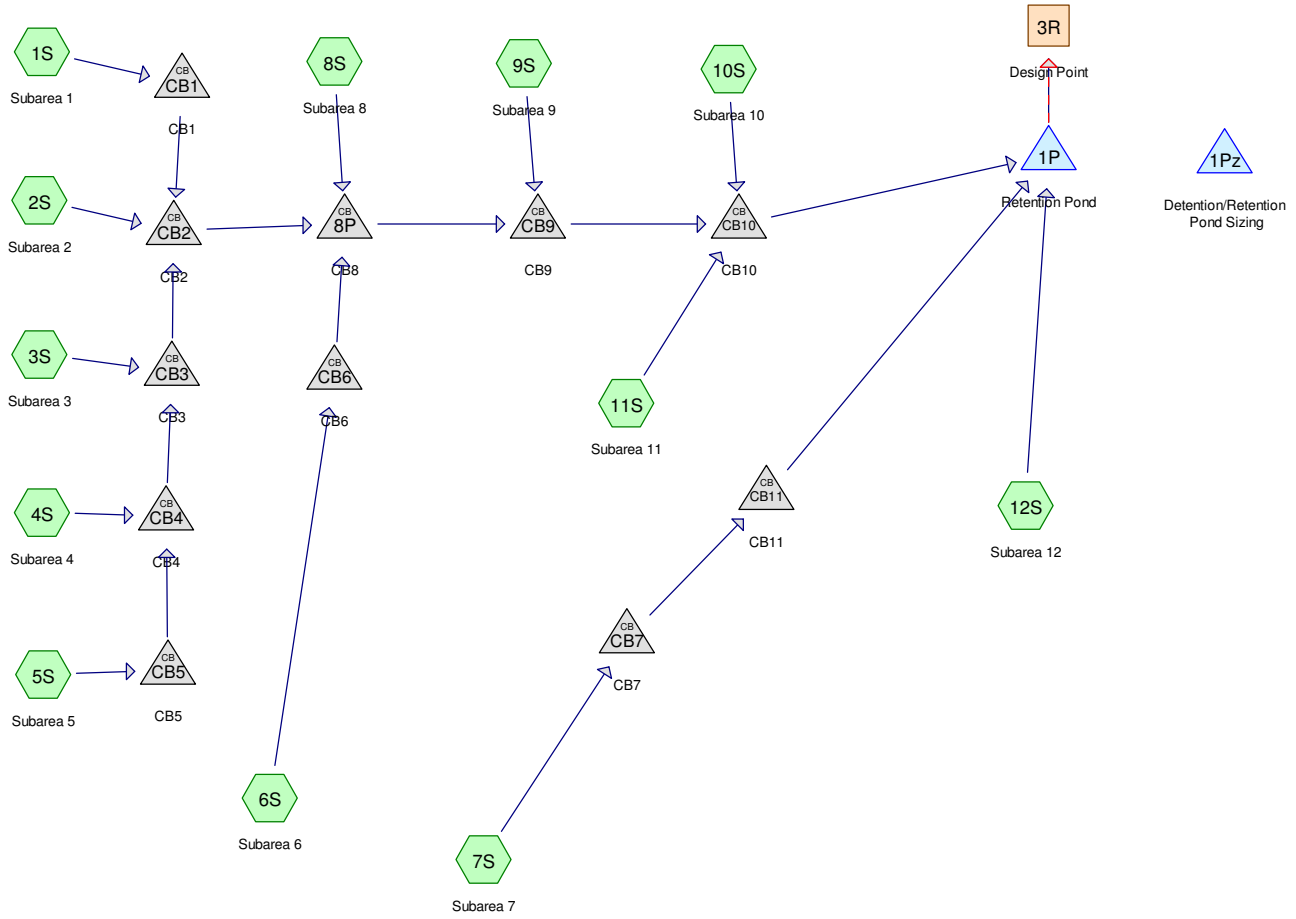

Subcat Reach Pond Link

Routing Diagram for Post Development
Prepared by CES, Inc, Printed 6/30/2015
HydroCAD® 10.00-12 s/n 00641 © 2014 HydroCAD Software Solutions LLC

Time span=5.00-20.00 hrs, dt=0.05 hrs, 301 points
Runoff by SCS TR-20 method, UH=SCS, Weighted-CN
Reach routing by Stor-Ind+Trans method - Pond routing by Stor-Ind method

Subcatchment 1S: Subarea 1 Runoff Area=14,618 sf 59.71% Impervious Runoff Depth>1.70"
Flow Length=160' Tc=3.0 min CN=88 Runoff=0.78 cfs 0.048 af

Subcatchment 2S: Subarea 2 Runoff Area=13,613 sf 75.19% Impervious Runoff Depth>2.04"
Flow Length=175' Tc=4.3 min CN=92 Runoff=0.80 cfs 0.053 af

Subcatchment 3S: Subarea 3 Runoff Area=11,953 sf 67.41% Impervious Runoff Depth>1.86"
Flow Length=175' Tc=4.2 min CN=90 Runoff=0.66 cfs 0.043 af

Subcatchment 4S: Subarea 4 Runoff Area=13,216 sf 73.41% Impervious Runoff Depth>2.04"
Flow Length=155' Tc=4.2 min CN=92 Runoff=0.78 cfs 0.052 af

Subcatchment 5S: Subarea 5 Runoff Area=8,770 sf 78.10% Impervious Runoff Depth>2.13"
Flow Length=165' Tc=3.2 min CN=93 Runoff=0.56 cfs 0.036 af

Subcatchment 6S: Subarea 6 Runoff Area=25,949 sf 96.67% Impervious Runoff Depth>2.50"
Flow Length=380' Tc=3.7 min CN=97 Runoff=1.81 cfs 0.124 af

Subcatchment 7S: Subarea 7 Runoff Area=30,001 sf 95.85% Impervious Runoff Depth>2.50"
Flow Length=375' Tc=4.8 min CN=97 Runoff=2.00 cfs 0.144 af

Subcatchment 8S: Subarea 8 Runoff Area=10,532 sf 93.19% Impervious Runoff Depth>2.41"
Flow Length=140' Tc=2.0 min CN=96 Runoff=0.74 cfs 0.049 af

Subcatchment 9S: Subarea 9 Runoff Area=13,467 sf 92.51% Impervious Runoff Depth>2.41"
Flow Length=165' Tc=1.6 min CN=96 Runoff=0.94 cfs 0.062 af

Subcatchment 10S: Subarea 10 Runoff Area=9,104 sf 94.73% Impervious Runoff Depth>2.50"
Flow Length=195' Tc=2.1 min CN=97 Runoff=0.65 cfs 0.044 af

Subcatchment 11S: Subarea 11 Runoff Area=25,812 sf 100.00% Impervious Runoff Depth>2.59"
Flow Length=190' Tc=0.8 min CN=98 Runoff=1.94 cfs 0.128 af

Subcatchment 12S: Subarea 12 Runoff Area=87,580 sf 90.03% Impervious Runoff Depth>2.41"
Flow Length=230' Tc=1.9 min CN=96 Runoff=6.11 cfs 0.404 af

Reach 3R: Design Point Avg. Flow Depth=0.54' Max Vel=9.89 fps Inflow=6.77 cfs 1.131 af
24.0" Round Pipe n=0.012 L=10.0' S=0.0300 '/' Capacity=42.45 cfs Outflow=6.77 cfs 1.131 af

Pond 1P: Retention Pond Peak Elev=290.23' Storage=12,800 cf Inflow=17.28 cfs 1.185 af
Primary=6.77 cfs 1.131 af Secondary=0.00 cfs 0.000 af Outflow=6.77 cfs 1.131 af

Pond 1Pz: Detention/Retention Pond Sizing Peak Elev=0.00' Storage=0 cf

Pond 8P: CB8 Peak Elev=297.49' Inflow=6.09 cfs 0.403 af
18.0" Round Culvert n=0.013 L=72.0' S=0.0050 '/' Outflow=6.09 cfs 0.403 af

Pond CB1: CB1 Peak Elev=299.24' Inflow=0.78 cfs 0.048 af
12.0" Round Culvert n=0.013 L=85.0' S=0.0100 '/' Outflow=0.78 cfs 0.048 af

Pond CB10: CB10 Peak Elev=297.58' Inflow=9.30 cfs 0.637 af
18.0" Round Culvert n=0.013 L=130.0' S=0.0186 '/' Outflow=9.30 cfs 0.637 af

Pond CB11: CB11 Peak Elev=294.33' Inflow=2.00 cfs 0.144 af
18.0" Round Culvert n=0.013 L=230.0' S=0.0206 '/' Outflow=2.00 cfs 0.144 af

Pond CB2: CB2 Peak Elev=297.84' Inflow=3.57 cfs 0.231 af
18.0" Round Culvert n=0.013 L=40.0' S=0.0200 '/' Outflow=3.57 cfs 0.231 af

Pond CB3: CB3 Peak Elev=298.33' Inflow=2.00 cfs 0.130 af
15.0" Round Culvert n=0.013 L=65.0' S=0.0100 '/' Outflow=2.00 cfs 0.130 af

Pond CB4: CB4 Peak Elev=299.28' Inflow=1.34 cfs 0.087 af
12.0" Round Culvert n=0.013 L=96.0' S=0.0100 '/' Outflow=1.34 cfs 0.087 af

Pond CB5: CB5 Peak Elev=299.84' Inflow=0.56 cfs 0.036 af
12.0" Round Culvert n=0.013 L=76.0' S=0.0100 '/' Outflow=0.56 cfs 0.036 af

Pond CB6: CB6 Peak Elev=297.14' Inflow=1.81 cfs 0.124 af
15.0" Round Culvert n=0.013 L=70.0' S=0.0050 '/' Outflow=1.81 cfs 0.124 af

Pond CB7: CB7 Peak Elev=295.69' Inflow=2.00 cfs 0.144 af
15.0" Round Culvert n=0.013 L=165.0' S=0.0087 '/' Outflow=2.00 cfs 0.144 af

Pond CB9: CB9 Peak Elev=297.31' Inflow=6.98 cfs 0.466 af
18.0" Round Culvert n=0.013 L=95.0' S=0.0051 '/' Outflow=6.98 cfs 0.466 af

Total Runoff Area = 6.075 ac Runoff Volume = 1.185 af Average Runoff Depth = 2.34"
11.96% Pervious = 0.726 ac 88.04% Impervious = 5.348 ac

Summary for Subcatchment 1S: Subarea 1

Runoff = 0.78 cfs @ 12.05 hrs, Volume= 0.048 af, Depth> 1.70"

Runoff by SCS TR-20 method, UH=SCS, Weighted-CN, Time Span= 5.00-20.00 hrs, dt= 0.05 hrs
Type III 24-hr 2 Year Rainfall=3.00"

Area (sf)	CN	Description
8,728	98	Paved parking, HSG C
5,890	74	>75% Grass cover, Good, HSG C
14,618	88	Weighted Average
5,890		40.29% Pervious Area
8,728		59.71% Impervious Area

Tc (min)	Length (feet)	Slope (ft/ft)	Velocity (ft/sec)	Capacity (cfs)	Description
2.0	40	0.1750	0.33		**Sheet Flow,** Grass: Short n= 0.150 P2= 3.00"
0.2	25	0.0800	1.76		**Sheet Flow,** Smooth surfaces n= 0.011 P2= 3.00"
0.8	95	0.0530	1.95		**Sheet Flow,** Smooth surfaces n= 0.011 P2= 3.00"
3.0	160	Total			

Summary for Subcatchment 2S: Subarea 2

Runoff = 0.80 cfs @ 12.06 hrs, Volume= 0.053 af, Depth> 2.04"

Runoff by SCS TR-20 method, UH=SCS, Weighted-CN, Time Span= 5.00-20.00 hrs, dt= 0.05 hrs
Type III 24-hr 2 Year Rainfall=3.00"

Area (sf)	CN	Description
10,236	98	Paved parking, HSG C
3,377	74	>75% Grass cover, Good, HSG C
13,613	92	Weighted Average
3,377		24.81% Pervious Area
10,236		75.19% Impervious Area

Tc (min)	Length (feet)	Slope (ft/ft)	Velocity (ft/sec)	Capacity (cfs)	Description
3.1	40	0.0625	0.22		**Sheet Flow,** Grass: Short n= 0.150 P2= 3.00"
0.3	35	0.1140	2.17		**Sheet Flow,** Smooth surfaces n= 0.011 P2= 3.00"
0.8	90	0.0560	1.97		**Sheet Flow,** Smooth surfaces n= 0.011 P2= 3.00"
0.1	10	0.0120	2.22		**Shallow Concentrated Flow,** Paved Kv= 20.3 fps
4.3	175	Total			

Summary for Subcatchment 3S: Subarea 3

Runoff = 0.66 cfs @ 12.06 hrs, Volume= 0.043 af, Depth> 1.86"

Runoff by SCS TR-20 method, UH=SCS, Weighted-CN, Time Span= 5.00-20.00 hrs, dt= 0.05 hrs
Type III 24-hr 2 Year Rainfall=3.00"

Area (sf)	CN	Description
8,057	98	Paved parking, HSG C
3,896	74	>75% Grass cover, Good, HSG C
11,953	90	Weighted Average
3,896		32.59% Pervious Area
8,057		67.41% Impervious Area

Tc (min)	Length (feet)	Slope (ft/ft)	Velocity (ft/sec)	Capacity (cfs)	Description
3.2	65	0.1500	0.34		**Sheet Flow,** Grass: Short n= 0.150 P2= 3.00"
0.9	95	0.0440	1.81		**Sheet Flow,** Smooth surfaces n= 0.011 P2= 3.00"
0.1	15	0.0330	3.69		**Shallow Concentrated Flow,** Paved Kv= 20.3 fps
4.2	175	Total			

Summary for Subcatchment 4S: Subarea 4

Runoff = 0.78 cfs @ 12.06 hrs, Volume= 0.052 af, Depth> 2.04"

Runoff by SCS TR-20 method, UH=SCS, Weighted-CN, Time Span= 5.00-20.00 hrs, dt= 0.05 hrs
Type III 24-hr 2 Year Rainfall=3.00"

Area (sf)	CN	Description
9,702	98	Paved parking, HSG C
3,514	74	>75% Grass cover, Good, HSG C
13,216	92	Weighted Average
3,514		26.59% Pervious Area
9,702		73.41% Impervious Area

Tc (min)	Length (feet)	Slope (ft/ft)	Velocity (ft/sec)	Capacity (cfs)	Description
3.3	55	0.0966	0.27		**Sheet Flow,** Grass: Short n= 0.150 P2= 3.00"
0.9	95	0.0370	1.69		**Sheet Flow,** Smooth surfaces n= 0.011 P2= 3.00"
0.0	5	0.0330	3.69		**Shallow Concentrated Flow,** Paved Kv= 20.3 fps
4.2	155	Total			

Summary for Subcatchment 5S: Subarea 5

Runoff = 0.56 cfs @ 12.05 hrs, Volume= 0.036 af, Depth> 2.13"

Runoff by SCS TR-20 method, UH=SCS, Weighted-CN, Time Span= 5.00-20.00 hrs, dt= 0.05 hrs
Type III 24-hr 2 Year Rainfall=3.00"

Area (sf)	CN	Description
6,849	98	Paved parking, HSG C
1,921	74	>75% Grass cover, Good, HSG C
8,770	93	Weighted Average
1,921		21.90% Pervious Area
6,849		78.10% Impervious Area

Tc (min)	Length (feet)	Slope (ft/ft)	Velocity (ft/sec)	Capacity (cfs)	Description
2.2	45	0.1780	0.34		**Sheet Flow,** Grass: Short n= 0.150 P2= 3.00"
0.9	100	0.0400	1.76		**Sheet Flow,** Smooth surfaces n= 0.011 P2= 3.00"
0.1	20	0.0330	3.69		**Shallow Concentrated Flow,** Paved Kv= 20.3 fps
3.2	165	Total			

Summary for Subcatchment 6S: Subarea 6

Runoff = 1.81 cfs @ 12.05 hrs, Volume= 0.124 af, Depth> 2.50"

Runoff by SCS TR-20 method, UH=SCS, Weighted-CN, Time Span= 5.00-20.00 hrs, dt= 0.05 hrs
Type III 24-hr 2 Year Rainfall=3.00"

Area (sf)	CN	Description
25,085	98	Paved parking, HSG C
864	74	>75% Grass cover, Good, HSG C
25,949	97	Weighted Average
864		3.33% Pervious Area
25,085		96.67% Impervious Area

Tc (min)	Length (feet)	Slope (ft/ft)	Velocity (ft/sec)	Capacity (cfs)	Description
1.0	20	0.2750	0.34		**Sheet Flow,** Grass: Short n= 0.150 P2= 3.00"
1.3	130	0.0310	1.67		**Sheet Flow,** Smooth surfaces n= 0.011 P2= 3.00"
1.4	230	0.0170	2.65		**Shallow Concentrated Flow,** Paved Kv= 20.3 fps
3.7	380	Total			

Summary for Subcatchment 7S: Subarea 7

Runoff = 2.00 cfs @ 12.07 hrs, Volume= 0.144 af, Depth> 2.50"

Runoff by SCS TR-20 method, UH=SCS, Weighted-CN, Time Span= 5.00-20.00 hrs, dt= 0.05 hrs
Type III 24-hr 2 Year Rainfall=3.00"

Area (sf)	CN	Description
28,756	98	Paved parking, HSG C
1,245	74	>75% Grass cover, Good, HSG C
30,001	97	Weighted Average
1,245		4.15% Pervious Area
28,756		95.85% Impervious Area

Tc (min)	Length (feet)	Slope (ft/ft)	Velocity (ft/sec)	Capacity (cfs)	Description
2.2	30	0.0833	0.23		**Sheet Flow,** Grass: Short n= 0.150 P2= 3.00"
1.4	120	0.0210	1.41		**Sheet Flow,** Smooth surfaces n= 0.011 P2= 3.00"
1.2	225	0.0220	3.01		**Shallow Concentrated Flow,** Paved Kv= 20.3 fps
4.8	375	Total			

Summary for Subcatchment 8S: Subarea 8

Runoff = 0.74 cfs @ 12.03 hrs, Volume= 0.049 af, Depth> 2.41"

Runoff by SCS TR-20 method, UH=SCS, Weighted-CN, Time Span= 5.00-20.00 hrs, dt= 0.05 hrs
Type III 24-hr 2 Year Rainfall=3.00"

Area (sf)	CN	Description
9,815	98	Paved parking, HSG C
717	74	>75% Grass cover, Good, HSG C
10,532	96	Weighted Average
717		6.81% Pervious Area
9,815		93.19% Impervious Area

Tc (min)	Length (feet)	Slope (ft/ft)	Velocity (ft/sec)	Capacity (cfs)	Description
1.0	25	0.4400	0.43		**Sheet Flow,** Grass: Short n= 0.150 P2= 3.00"
1.0	115	0.0480	1.94		**Sheet Flow,** Smooth surfaces n= 0.011 P2= 3.00"
2.0	140	Total			

Summary for Subcatchment 9S: Subarea 9

Runoff = 0.94 cfs @ 12.02 hrs, Volume= 0.062 af, Depth> 2.41"

Runoff by SCS TR-20 method, UH=SCS, Weighted-CN, Time Span= 5.00-20.00 hrs, dt= 0.05 hrs
Type III 24-hr 2 Year Rainfall=3.00"

Area (sf)	CN	Description
12,458	98	Paved parking, HSG C
1,009	74	>75% Grass cover, Good, HSG C
13,467	96	Weighted Average
1,009		7.49% Pervious Area
12,458		92.51% Impervious Area

Tc (min)	Length (feet)	Slope (ft/ft)	Velocity (ft/sec)	Capacity (cfs)	Description
0.4	10	0.7000	0.43		**Sheet Flow,** Grass: Short n= 0.150 P2= 3.00"
1.0	130	0.0540	2.09		**Sheet Flow,** Smooth surfaces n= 0.011 P2= 3.00"
0.2	25	0.0184	2.75		**Shallow Concentrated Flow,** Paved Kv= 20.3 fps
1.6	165	Total			

Summary for Subcatchment 10S: Subarea 10

Runoff = 0.65 cfs @ 12.03 hrs, Volume= 0.044 af, Depth> 2.50"

Runoff by SCS TR-20 method, UH=SCS, Weighted-CN, Time Span= 5.00-20.00 hrs, dt= 0.05 hrs
Type III 24-hr 2 Year Rainfall=3.00"

Area (sf)	CN	Description
8,624	98	Paved parking, HSG C
480	74	>75% Grass cover, Good, HSG C
9,104	97	Weighted Average
480		5.27% Pervious Area
8,624		94.73% Impervious Area

Tc (min)	Length (feet)	Slope (ft/ft)	Velocity (ft/sec)	Capacity (cfs)	Description
0.5	10	0.3000	0.31		**Sheet Flow,** Grass: Short n= 0.150 P2= 3.00"
1.1	140	0.0540	2.12		**Sheet Flow,** Smooth surfaces n= 0.011 P2= 3.00"
0.5	45	0.0056	1.52		**Shallow Concentrated Flow,** Paved Kv= 20.3 fps
2.1	195	Total			

Summary for Subcatchment 11S: Subarea 11

Runoff = 1.94 cfs @ 12.01 hrs, Volume= 0.128 af, Depth> 2.59"

Runoff by SCS TR-20 method, UH=SCS, Weighted-CN, Time Span= 5.00-20.00 hrs, dt= 0.05 hrs
Type III 24-hr 2 Year Rainfall=3.00"

Area (sf)	CN	Description
25,812	98	Roofs, HSG C
25,812		100.00% Impervious Area

Tc (min)	Length (feet)	Slope (ft/ft)	Velocity (ft/sec)	Capacity (cfs)	Description
0.7	80	0.0500	1.84		**Sheet Flow,** Smooth surfaces n= 0.011 P2= 3.00"
0.1	110	0.2500	18.57	3.65	**Pipe Channel,** 6.0" Round Area= 0.2 sf Perim= 1.6' r= 0.13' n= 0.010 PVC, smooth interior
0.8	190	Total			

Summary for Subcatchment 12S: Subarea 12

Runoff = 6.11 cfs @ 12.03 hrs, Volume= 0.404 af, Depth> 2.41"

Runoff by SCS TR-20 method, UH=SCS, Weighted-CN, Time Span= 5.00-20.00 hrs, dt= 0.05 hrs
Type III 24-hr 2 Year Rainfall=3.00"

Area (sf)	CN	Description
78,848	98	Paved parking, HSG C
8,732	74	>75% Grass cover, Good, HSG C
87,580	96	Weighted Average
8,732		9.97% Pervious Area
78,848		90.03% Impervious Area

Tc (min)	Length (feet)	Slope (ft/ft)	Velocity (ft/sec)	Capacity (cfs)	Description
1.3	100	0.0170	1.25		**Sheet Flow,** Smooth surfaces n= 0.011 P2= 3.00"
0.6	110	0.0250	3.21		**Shallow Concentrated Flow,** Paved Kv= 20.3 fps
0.0	20	0.2500	7.50		**Shallow Concentrated Flow,** Grassed Waterway Kv= 15.0 fps
1.9	230	Total			

Summary for Reach 3R: Design Point

Inflow Area = 6.075 ac, 88.04% Impervious, Inflow Depth > 2.24" for 2 Year event
Inflow = 6.77 cfs @ 12.24 hrs, Volume= 1.131 af
Outflow = 6.77 cfs @ 12.24 hrs, Volume= 1.131 af, Atten= 0%, Lag= 0.0 min

Routing by Stor-Ind+Trans method, Time Span= 5.00-20.00 hrs, dt= 0.05 hrs
Max. Velocity= 9.89 fps, Min. Travel Time= 0.0 min
Avg. Velocity = 5.16 fps, Avg. Travel Time= 0.0 min

Peak Storage= 7 cf @ 12.24 hrs
Average Depth at Peak Storage= 0.54'
Bank-Full Depth= 2.00' Flow Area= 3.1 sf, Capacity= 42.45 cfs

24.0" Round Pipe
n= 0.012
Length= 10.0' Slope= 0.0300 '/'
Inlet Invert= 0.00', Outlet Invert= -0.30'

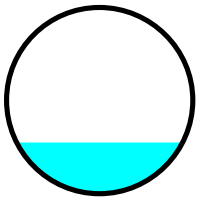

Summary for Pond 1P: Retention Pond

Inflow Area = 6.075 ac, 88.04% Impervious, Inflow Depth > 2.34" for 2 Year event
Inflow = 17.28 cfs @ 12.04 hrs, Volume= 1.185 af
Outflow = 6.77 cfs @ 12.24 hrs, Volume= 1.131 af, Atten= 61%, Lag= 11.9 min
Primary = 6.77 cfs @ 12.24 hrs, Volume= 1.131 af
Secondary = 0.00 cfs @ 5.00 hrs, Volume= 0.000 af

Routing by Stor-Ind method, Time Span= 5.00-20.00 hrs, dt= 0.05 hrs
Peak Elev= 290.23' @ 12.24 hrs Surf.Area= 5,667 sf Storage= 12,800 cf

Plug-Flow detention time= 48.8 min calculated for 1.131 af (96% of inflow)
Center-of-Mass det. time= 31.0 min (780.2 - 749.2)

Volume	Invert	Avail.Storage	Storage Description
#1	287.55'	23,975 cf	**Custom Stage Data (Prismatic)** Listed below

Elevation (feet)	Surf.Area (sq-ft)	Inc.Store (cubic-feet)	Cum.Store (cubic-feet)
287.55	3,883	0	0
288.00	4,172	1,812	1,812
289.00	4,817	4,495	6,307
290.00	5,494	5,156	11,462
291.00	6,255	5,875	17,337
292.00	7,022	6,639	23,975

Device	Routing	Invert	Outlet Devices
#1	Primary	288.00'	**24.0" W x 6.0" H Vert. Orifice/Grate** C= 0.600
#2	Secondary	291.00'	**3.0' long Sharp-Crested Rectangular Weir** 2 End Contraction(s) 0.5' Crest Height

Primary OutFlow Max=6.76 cfs @ 12.24 hrs HW=290.23' (Free Discharge)
└**1=Orifice/Grate** (Orifice Controls 6.76 cfs @ 6.76 fps)

Secondary OutFlow Max=0.00 cfs @ 5.00 hrs HW=287.55' (Free Discharge)
└**2=Sharp-Crested Rectangular Weir** (Controls 0.00 cfs)

Summary for Pond 1Pz: Detention/Retention Pond Sizing

Volume	Invert	Avail.Storage	Storage Description
#1	281.00'	37,418 cf	**Custom Stage Data (Prismatic)** Listed below (Recalc)

Elevation (feet)	Surf.Area (sq-ft)	Inc.Store (cubic-feet)	Cum.Store (cubic-feet)
281.00	472	0	0
282.00	880	676	676
283.00	1,352	1,116	1,792
284.00	1,846	1,599	3,391
285.00	2,373	2,110	5,501
286.00	2,938	2,656	8,156
287.00	3,544	3,241	11,397
288.00	4,172	3,858	15,255
289.00	4,817	4,495	19,750
290.00	5,494	5,156	24,905
291.00	6,255	5,875	30,780
292.00	7,022	6,639	37,418

Summary for Pond 8P: CB8

Inflow Area = 2.265 ac, 79.55% Impervious, Inflow Depth > 2.14" for 2 Year event
Inflow = 6.09 cfs @ 12.05 hrs, Volume= 0.403 af
Outflow = 6.09 cfs @ 12.05 hrs, Volume= 0.403 af, Atten= 0%, Lag= 0.0 min
Primary = 6.09 cfs @ 12.05 hrs, Volume= 0.403 af

Routing by Stor-Ind method, Time Span= 5.00-20.00 hrs, dt= 0.05 hrs
Peak Elev= 297.49' @ 12.05 hrs

Device	Routing	Invert	Outlet Devices
#1	Primary	295.92'	**18.0" Round Culvert** L= 72.0' CPP, projecting, no headwall, Ke= 0.900 Inlet / Outlet Invert= 295.92' / 295.56' S= 0.0050 '/' Cc= 0.900 n= 0.013 Corrugated PE, smooth interior, Flow Area= 1.77 sf

Primary OutFlow Max=6.01 cfs @ 12.05 hrs HW=297.48' (Free Discharge)
└**1=Culvert** (Barrel Controls 6.01 cfs @ 4.07 fps)

Summary for Pond CB1: CB1

Inflow Area = 0.336 ac, 59.71% Impervious, Inflow Depth > 1.70" for 2 Year event
Inflow = 0.78 cfs @ 12.05 hrs, Volume= 0.048 af
Outflow = 0.78 cfs @ 12.05 hrs, Volume= 0.048 af, Atten= 0%, Lag= 0.0 min
Primary = 0.78 cfs @ 12.05 hrs, Volume= 0.048 af

Routing by Stor-Ind method, Time Span= 5.00-20.00 hrs, dt= 0.05 hrs
Peak Elev= 299.24' @ 12.05 hrs

Device	Routing	Invert	Outlet Devices
#1	Primary	298.73'	**12.0" Round Culvert** L= 85.0' CPP, projecting, no headwall, Ke= 0.900 Inlet / Outlet Invert= 298.73' / 297.88' S= 0.0100 '/' Cc= 0.900 n= 0.013 Corrugated PE, smooth interior, Flow Area= 0.79 sf

Primary OutFlow Max=0.78 cfs @ 12.05 hrs HW=299.24' (Free Discharge)
└**1=Culvert** (Inlet Controls 0.78 cfs @ 1.92 fps)

Summary for Pond CB10: CB10

Inflow Area = 3.375 ac, 85.26% Impervious, Inflow Depth > 2.26" for 2 Year event
Inflow = 9.30 cfs @ 12.04 hrs, Volume= 0.637 af
Outflow = 9.30 cfs @ 12.04 hrs, Volume= 0.637 af, Atten= 0%, Lag= 0.0 min
Primary = 9.30 cfs @ 12.04 hrs, Volume= 0.637 af

Routing by Stor-Ind method, Time Span= 5.00-20.00 hrs, dt= 0.05 hrs
Peak Elev= 297.58' @ 12.04 hrs

Device	Routing	Invert	Outlet Devices
#1	Primary	294.92'	**18.0" Round Culvert** L= 130.0' CPP, projecting, no headwall, Ke= 0.900 Inlet / Outlet Invert= 294.92' / 292.50' S= 0.0186 '/' Cc= 0.900 n= 0.013 Corrugated PE, smooth interior, Flow Area= 1.77 sf

Primary OutFlow Max=9.10 cfs @ 12.04 hrs HW=297.50' (Free Discharge)
└**1=Culvert** (Inlet Controls 9.10 cfs @ 5.15 fps)

Summary for Pond CB11: CB11

Inflow Area = 0.689 ac, 95.85% Impervious, Inflow Depth > 2.50" for 2 Year event
Inflow = 2.00 cfs @ 12.07 hrs, Volume= 0.144 af
Outflow = 2.00 cfs @ 12.07 hrs, Volume= 0.144 af, Atten= 0%, Lag= 0.0 min
Primary = 2.00 cfs @ 12.07 hrs, Volume= 0.144 af

Routing by Stor-Ind method, Time Span= 5.00-20.00 hrs, dt= 0.05 hrs
Peak Elev= 294.33' @ 12.07 hrs

Device	Routing	Invert	Outlet Devices
#1	Primary	293.59'	**18.0" Round Culvert** L= 230.0' CPP, projecting, no headwall, Ke= 0.900

Inlet / Outlet Invert= 293.59' / 288.85' S= 0.0206 '/' Cc= 0.900
n= 0.013 Corrugated PE, smooth interior, Flow Area= 1.77 sf

Primary OutFlow Max=1.92 cfs @ 12.07 hrs HW=294.31' (Free Discharge)
└**1=Culvert** (Inlet Controls 1.92 cfs @ 2.28 fps)

Summary for Pond CB2: CB2

Inflow Area = 1.427 ac, 70.09% Impervious, Inflow Depth > 1.94" for 2 Year event
Inflow = 3.57 cfs @ 12.06 hrs, Volume= 0.231 af
Outflow = 3.57 cfs @ 12.06 hrs, Volume= 0.231 af, Atten= 0%, Lag= 0.0 min
Primary = 3.57 cfs @ 12.06 hrs, Volume= 0.231 af

Routing by Stor-Ind method, Time Span= 5.00-20.00 hrs, dt= 0.05 hrs
Peak Elev= 297.84' @ 12.06 hrs

Device	Routing	Invert	Outlet Devices
#1	Primary	296.80'	**18.0" Round Culvert** L= 40.0' CPP, projecting, no headwall, Ke= 0.900 Inlet / Outlet Invert= 296.80' / 296.00' S= 0.0200 '/' Cc= 0.900 n= 0.013 Corrugated PE, smooth interior, Flow Area= 1.77 sf

Primary OutFlow Max=3.48 cfs @ 12.06 hrs HW=297.82' (Free Discharge)
└**1=Culvert** (Inlet Controls 3.48 cfs @ 2.72 fps)

Summary for Pond CB3: CB3

Inflow Area = 0.779 ac, 72.51% Impervious, Inflow Depth > 2.00" for 2 Year event
Inflow = 2.00 cfs @ 12.06 hrs, Volume= 0.130 af
Outflow = 2.00 cfs @ 12.06 hrs, Volume= 0.130 af, Atten= 0%, Lag= 0.0 min
Primary = 2.00 cfs @ 12.06 hrs, Volume= 0.130 af

Routing by Stor-Ind method, Time Span= 5.00-20.00 hrs, dt= 0.05 hrs
Peak Elev= 298.33' @ 12.06 hrs

Device	Routing	Invert	Outlet Devices
#1	Primary	297.53'	**15.0" Round Culvert** L= 65.0' CPP, projecting, no headwall, Ke= 0.900 Inlet / Outlet Invert= 297.53' / 296.88' S= 0.0100 '/' Cc= 0.900 n= 0.013 Corrugated PE, smooth interior, Flow Area= 1.23 sf

Primary OutFlow Max=1.94 cfs @ 12.06 hrs HW=298.32' (Free Discharge)
└**1=Culvert** (Inlet Controls 1.94 cfs @ 2.39 fps)

Summary for Pond CB4: CB4

Inflow Area = 0.505 ac, 75.28% Impervious, Inflow Depth > 2.07" for 2 Year event
Inflow = 1.34 cfs @ 12.06 hrs, Volume= 0.087 af
Outflow = 1.34 cfs @ 12.06 hrs, Volume= 0.087 af, Atten= 0%, Lag= 0.0 min
Primary = 1.34 cfs @ 12.06 hrs, Volume= 0.087 af

Routing by Stor-Ind method, Time Span= 5.00-20.00 hrs, dt= 0.05 hrs
Peak Elev= 299.28' @ 12.06 hrs

Device	Routing	Invert	Outlet Devices
#1	Primary	298.57'	**12.0" Round Culvert** L= 96.0' CPP, projecting, no headwall, Ke= 0.900 Inlet / Outlet Invert= 298.57' / 297.61' S= 0.0100 '/' Cc= 0.900 n= 0.013 Corrugated PE, smooth interior, Flow Area= 0.79 sf

Primary OutFlow Max=1.31 cfs @ 12.06 hrs HW=299.27' (Free Discharge)
└**1=Culvert** (Inlet Controls 1.31 cfs @ 2.24 fps)

Summary for Pond CB5: CB5

Inflow Area = 0.201 ac, 78.10% Impervious, Inflow Depth > 2.13" for 2 Year event
Inflow = 0.56 cfs @ 12.05 hrs, Volume= 0.036 af
Outflow = 0.56 cfs @ 12.05 hrs, Volume= 0.036 af, Atten= 0%, Lag= 0.0 min
Primary = 0.56 cfs @ 12.05 hrs, Volume= 0.036 af

Routing by Stor-Ind method, Time Span= 5.00-20.00 hrs, dt= 0.05 hrs
Peak Elev= 299.84' @ 12.05 hrs

Device	Routing	Invert	Outlet Devices
#1	Primary	299.41'	**12.0" Round Culvert** L= 76.0' CPP, projecting, no headwall, Ke= 0.900 Inlet / Outlet Invert= 299.41' / 298.65' S= 0.0100 '/' Cc= 0.900 n= 0.013 Corrugated PE, smooth interior, Flow Area= 0.79 sf

Primary OutFlow Max=0.56 cfs @ 12.05 hrs HW=299.84' (Free Discharge)
└**1=Culvert** (Inlet Controls 0.56 cfs @ 1.75 fps)

Summary for Pond CB6: CB6

Inflow Area = 0.596 ac, 96.67% Impervious, Inflow Depth > 2.50" for 2 Year event
Inflow = 1.81 cfs @ 12.05 hrs, Volume= 0.124 af
Outflow = 1.81 cfs @ 12.05 hrs, Volume= 0.124 af, Atten= 0%, Lag= 0.0 min
Primary = 1.81 cfs @ 12.05 hrs, Volume= 0.124 af

Routing by Stor-Ind method, Time Span= 5.00-20.00 hrs, dt= 0.05 hrs
Peak Elev= 297.14' @ 12.05 hrs

Device	Routing	Invert	Outlet Devices
#1	Primary	296.35'	**15.0" Round Culvert** L= 70.0' CPP, projecting, no headwall, Ke= 0.900 Inlet / Outlet Invert= 296.35' / 296.00' S= 0.0050 '/' Cc= 0.900 n= 0.013 Corrugated PE, smooth interior, Flow Area= 1.23 sf

Primary OutFlow Max=1.78 cfs @ 12.05 hrs HW=297.14' (Free Discharge)
└**1=Culvert** (Barrel Controls 1.78 cfs @ 3.12 fps)

Summary for Pond CB7: CB7

Inflow Area = 0.689 ac, 95.85% Impervious, Inflow Depth > 2.50" for 2 Year event
Inflow = 2.00 cfs @ 12.07 hrs, Volume= 0.144 af
Outflow = 2.00 cfs @ 12.07 hrs, Volume= 0.144 af, Atten= 0%, Lag= 0.0 min
Primary = 2.00 cfs @ 12.07 hrs, Volume= 0.144 af

Routing by Stor-Ind method, Time Span= 5.00-20.00 hrs, dt= 0.05 hrs
Peak Elev= 295.69' @ 12.07 hrs

Device	Routing	Invert	Outlet Devices
#1	Primary	294.89'	**15.0" Round Culvert** L= 165.0' CPP, projecting, no headwall, Ke= 0.900 Inlet / Outlet Invert= 294.89' / 293.45' S= 0.0087 '/' Cc= 0.900 n= 0.013 Corrugated PE, smooth interior, Flow Area= 1.23 sf

Primary OutFlow Max=1.92 cfs @ 12.07 hrs HW=295.67' (Free Discharge)
└**1=Culvert** (Inlet Controls 1.92 cfs @ 2.38 fps)

Summary for Pond CB9: CB9

Inflow Area = 2.574 ac, 81.10% Impervious, Inflow Depth > 2.17" for 2 Year event
Inflow = 6.98 cfs @ 12.05 hrs, Volume= 0.466 af
Outflow = 6.98 cfs @ 12.05 hrs, Volume= 0.466 af, Atten= 0%, Lag= 0.0 min
Primary = 6.98 cfs @ 12.05 hrs, Volume= 0.466 af

Routing by Stor-Ind method, Time Span= 5.00-20.00 hrs, dt= 0.05 hrs
Peak Elev= 297.31' @ 12.05 hrs

Device	Routing	Invert	Outlet Devices
#1	Primary	295.48'	**18.0" Round Culvert** L= 95.0' CPP, projecting, no headwall, Ke= 0.900 Inlet / Outlet Invert= 295.48' / 295.00' S= 0.0051 '/' Cc= 0.900 n= 0.013 Corrugated PE, smooth interior, Flow Area= 1.77 sf

Primary OutFlow Max=6.97 cfs @ 12.05 hrs HW=297.31' (Free Discharge)
└**1=Culvert** (Inlet Controls 6.97 cfs @ 3.94 fps)

POST DEVELOPMENT - 10 YEAR

Time span=5.00-20.00 hrs, dt=0.05 hrs, 301 points
Runoff by SCS TR-20 method, UH=SCS, Weighted-CN
Reach routing by Stor-Ind+Trans method - Pond routing by Stor-Ind method

Subcatchment 1S: Subarea 1 Runoff Area=14,618 sf 59.71% Impervious Runoff Depth>2.92"
Flow Length=160' Tc=3.0 min CN=88 Runoff=1.30 cfs 0.082 af

Subcatchment 2S: Subarea 2 Runoff Area=13,613 sf 75.19% Impervious Runoff Depth>3.31"
Flow Length=175' Tc=4.3 min CN=92 Runoff=1.27 cfs 0.086 af

Subcatchment 3S: Subarea 3 Runoff Area=11,953 sf 67.41% Impervious Runoff Depth>3.12"
Flow Length=175' Tc=4.2 min CN=90 Runoff=1.07 cfs 0.071 af

Subcatchment 4S: Subarea 4 Runoff Area=13,216 sf 73.41% Impervious Runoff Depth>3.31"
Flow Length=155' Tc=4.2 min CN=92 Runoff=1.24 cfs 0.084 af

Subcatchment 5S: Subarea 5 Runoff Area=8,770 sf 78.10% Impervious Runoff Depth>3.41"
Flow Length=165' Tc=3.2 min CN=93 Runoff=0.87 cfs 0.057 af

Subcatchment 6S: Subarea 6 Runoff Area=25,949 sf 96.67% Impervious Runoff Depth>3.79"
Flow Length=380' Tc=3.7 min CN=97 Runoff=2.69 cfs 0.188 af

Subcatchment 7S: Subarea 7 Runoff Area=30,001 sf 95.85% Impervious Runoff Depth>3.79"
Flow Length=375' Tc=4.8 min CN=97 Runoff=2.98 cfs 0.218 af

Subcatchment 8S: Subarea 8 Runoff Area=10,532 sf 93.19% Impervious Runoff Depth>3.70"
Flow Length=140' Tc=2.0 min CN=96 Runoff=1.11 cfs 0.075 af

Subcatchment 9S: Subarea 9 Runoff Area=13,467 sf 92.51% Impervious Runoff Depth>3.70"
Flow Length=165' Tc=1.6 min CN=96 Runoff=1.41 cfs 0.095 af

Subcatchment 10S: Subarea 10 Runoff Area=9,104 sf 94.73% Impervious Runoff Depth>3.79"
Flow Length=195' Tc=2.1 min CN=97 Runoff=0.97 cfs 0.066 af

Subcatchment 11S: Subarea 11 Runoff Area=25,812 sf 100.00% Impervious Runoff Depth>3.87"
Flow Length=190' Tc=0.8 min CN=98 Runoff=2.86 cfs 0.191 af

Subcatchment 12S: Subarea 12 Runoff Area=87,580 sf 90.03% Impervious Runoff Depth>3.70"
Flow Length=230' Tc=1.9 min CN=96 Runoff=9.19 cfs 0.620 af

Reach 3R: Design Point Avg. Flow Depth=0.69' Max Vel=11.25 fps Inflow=10.73 cfs 1.777 af
24.0" Round Pipe n=0.012 L=10.0' S=0.0300 '/' Capacity=42.45 cfs Outflow=10.73 cfs 1.777 af

Pond 1P: Retention Pond Peak Elev=291.36' Storage=19,721 cf Inflow=26.26 cfs 1.834 af
Primary=8.49 cfs 1.732 af Secondary=2.24 cfs 0.045 af Outflow=10.73 cfs 1.777 af

Pond 1Pz: Detention/Retention Pond Sizing Peak Elev=0.00' Storage=0 cf

Pond 8P: CB8 Peak Elev=298.67' Inflow=9.51 cfs 0.643 af
18.0" Round Culvert n=0.013 L=72.0' S=0.0050 '/' Outflow=9.51 cfs 0.643 af

Pond CB1: CB1 Peak Elev=299.42' Inflow=1.30 cfs 0.082 af
12.0" Round Culvert n=0.013 L=85.0' S=0.0100 '/' Outflow=1.30 cfs 0.082 af

Pond CB10: CB10 Peak Elev=300.19' Inflow=14.29 cfs 0.996 af
18.0" Round Culvert n=0.013 L=130.0' S=0.0186 '/' Outflow=14.29 cfs 0.996 af

Pond CB11: CB11 Peak Elev=294.52' Inflow=2.98 cfs 0.218 af
18.0" Round Culvert n=0.013 L=230.0' S=0.0206 '/' Outflow=2.98 cfs 0.218 af

Pond CB2: CB2 Peak Elev=298.27' Inflow=5.75 cfs 0.380 af
18.0" Round Culvert n=0.013 L=40.0' S=0.0200 '/' Outflow=5.75 cfs 0.380 af

Pond CB3: CB3 Peak Elev=298.62' Inflow=3.18 cfs 0.212 af
15.0" Round Culvert n=0.013 L=65.0' S=0.0100 '/' Outflow=3.18 cfs 0.212 af

Pond CB4: CB4 Peak Elev=299.57' Inflow=2.11 cfs 0.141 af
12.0" Round Culvert n=0.013 L=96.0' S=0.0100 '/' Outflow=2.11 cfs 0.141 af

Pond CB5: CB5 Peak Elev=299.96' Inflow=0.87 cfs 0.057 af
12.0" Round Culvert n=0.013 L=76.0' S=0.0100 '/' Outflow=0.87 cfs 0.057 af

Pond CB6: CB6 Peak Elev=297.37' Inflow=2.69 cfs 0.188 af
15.0" Round Culvert n=0.013 L=70.0' S=0.0050 '/' Outflow=2.69 cfs 0.188 af

Pond CB7: CB7 Peak Elev=295.93' Inflow=2.98 cfs 0.218 af
15.0" Round Culvert n=0.013 L=165.0' S=0.0087 '/' Outflow=2.98 cfs 0.218 af

Pond CB9: CB9 Peak Elev=298.84' Inflow=10.85 cfs 0.739 af
18.0" Round Culvert n=0.013 L=95.0' S=0.0051 '/' Outflow=10.85 cfs 0.739 af

Total Runoff Area = 6.075 ac Runoff Volume = 1.834 af Average Runoff Depth = 3.62"
11.96% Pervious = 0.726 ac 88.04% Impervious = 5.348 ac

Summary for Subcatchment 1S: Subarea 1

Runoff = 1.30 cfs @ 12.05 hrs, Volume= 0.082 af, Depth> 2.92"

Runoff by SCS TR-20 method, UH=SCS, Weighted-CN, Time Span= 5.00-20.00 hrs, dt= 0.05 hrs
Type III 24-hr 10 Year Rainfall=4.40"

Area (sf)	CN	Description
8,728	98	Paved parking, HSG C
5,890	74	>75% Grass cover, Good, HSG C
14,618	88	Weighted Average
5,890		40.29% Pervious Area
8,728		59.71% Impervious Area

Tc (min)	Length (feet)	Slope (ft/ft)	Velocity (ft/sec)	Capacity (cfs)	Description
2.0	40	0.1750	0.33		**Sheet Flow,** Grass: Short n= 0.150 P2= 3.00"
0.2	25	0.0800	1.76		**Sheet Flow,** Smooth surfaces n= 0.011 P2= 3.00"
0.8	95	0.0530	1.95		**Sheet Flow,** Smooth surfaces n= 0.011 P2= 3.00"
3.0	160	Total			

Summary for Subcatchment 2S: Subarea 2

Runoff = 1.27 cfs @ 12.06 hrs, Volume= 0.086 af, Depth> 3.31"

Runoff by SCS TR-20 method, UH=SCS, Weighted-CN, Time Span= 5.00-20.00 hrs, dt= 0.05 hrs
Type III 24-hr 10 Year Rainfall=4.40"

Area (sf)	CN	Description
10,236	98	Paved parking, HSG C
3,377	74	>75% Grass cover, Good, HSG C
13,613	92	Weighted Average
3,377		24.81% Pervious Area
10,236		75.19% Impervious Area

Tc (min)	Length (feet)	Slope (ft/ft)	Velocity (ft/sec)	Capacity (cfs)	Description
3.1	40	0.0625	0.22		**Sheet Flow,** Grass: Short n= 0.150 P2= 3.00"
0.3	35	0.1140	2.17		**Sheet Flow,** Smooth surfaces n= 0.011 P2= 3.00"
0.8	90	0.0560	1.97		**Sheet Flow,** Smooth surfaces n= 0.011 P2= 3.00"
0.1	10	0.0120	2.22		**Shallow Concentrated Flow,** Paved Kv= 20.3 fps
4.3	175	Total			

Summary for Subcatchment 3S: Subarea 3

Runoff = 1.07 cfs @ 12.06 hrs, Volume= 0.071 af, Depth> 3.12"

Runoff by SCS TR-20 method, UH=SCS, Weighted-CN, Time Span= 5.00-20.00 hrs, dt= 0.05 hrs
Type III 24-hr 10 Year Rainfall=4.40"

Area (sf)	CN	Description
8,057	98	Paved parking, HSG C
3,896	74	>75% Grass cover, Good, HSG C
11,953	90	Weighted Average
3,896		32.59% Pervious Area
8,057		67.41% Impervious Area

Tc (min)	Length (feet)	Slope (ft/ft)	Velocity (ft/sec)	Capacity (cfs)	Description
3.2	65	0.1500	0.34		**Sheet Flow,** Grass: Short n= 0.150 P2= 3.00"
0.9	95	0.0440	1.81		**Sheet Flow,** Smooth surfaces n= 0.011 P2= 3.00"
0.1	15	0.0330	3.69		**Shallow Concentrated Flow,** Paved Kv= 20.3 fps
4.2	175	Total			

Summary for Subcatchment 4S: Subarea 4

Runoff = 1.24 cfs @ 12.06 hrs, Volume= 0.084 af, Depth> 3.31"

Runoff by SCS TR-20 method, UH=SCS, Weighted-CN, Time Span= 5.00-20.00 hrs, dt= 0.05 hrs
Type III 24-hr 10 Year Rainfall=4.40"

Area (sf)	CN	Description
9,702	98	Paved parking, HSG C
3,514	74	>75% Grass cover, Good, HSG C
13,216	92	Weighted Average
3,514		26.59% Pervious Area
9,702		73.41% Impervious Area

Tc (min)	Length (feet)	Slope (ft/ft)	Velocity (ft/sec)	Capacity (cfs)	Description
3.3	55	0.0966	0.27		**Sheet Flow,** Grass: Short n= 0.150 P2= 3.00"
0.9	95	0.0370	1.69		**Sheet Flow,** Smooth surfaces n= 0.011 P2= 3.00"
0.0	5	0.0330	3.69		**Shallow Concentrated Flow,** Paved Kv= 20.3 fps
4.2	155	Total			

Summary for Subcatchment 5S: Subarea 5

Runoff = 0.87 cfs @ 12.05 hrs, Volume= 0.057 af, Depth> 3.41"

Runoff by SCS TR-20 method, UH=SCS, Weighted-CN, Time Span= 5.00-20.00 hrs, dt= 0.05 hrs
Type III 24-hr 10 Year Rainfall=4.40"

Area (sf)	CN	Description
6,849	98	Paved parking, HSG C
1,921	74	>75% Grass cover, Good, HSG C
8,770	93	Weighted Average
1,921		21.90% Pervious Area
6,849		78.10% Impervious Area

Tc (min)	Length (feet)	Slope (ft/ft)	Velocity (ft/sec)	Capacity (cfs)	Description
2.2	45	0.1780	0.34		**Sheet Flow,** Grass: Short n= 0.150 P2= 3.00"
0.9	100	0.0400	1.76		**Sheet Flow,** Smooth surfaces n= 0.011 P2= 3.00"
0.1	20	0.0330	3.69		**Shallow Concentrated Flow,** Paved Kv= 20.3 fps
3.2	165	Total			

Summary for Subcatchment 6S: Subarea 6

Runoff = 2.69 cfs @ 12.05 hrs, Volume= 0.188 af, Depth> 3.79"

Runoff by SCS TR-20 method, UH=SCS, Weighted-CN, Time Span= 5.00-20.00 hrs, dt= 0.05 hrs
Type III 24-hr 10 Year Rainfall=4.40"

Area (sf)	CN	Description
25,085	98	Paved parking, HSG C
864	74	>75% Grass cover, Good, HSG C
25,949	97	Weighted Average
864		3.33% Pervious Area
25,085		96.67% Impervious Area

Tc (min)	Length (feet)	Slope (ft/ft)	Velocity (ft/sec)	Capacity (cfs)	Description
1.0	20	0.2750	0.34		**Sheet Flow,** Grass: Short n= 0.150 P2= 3.00"
1.3	130	0.0310	1.67		**Sheet Flow,** Smooth surfaces n= 0.011 P2= 3.00"
1.4	230	0.0170	2.65		**Shallow Concentrated Flow,** Paved Kv= 20.3 fps
3.7	380	Total			

Summary for Subcatchment 7S: Subarea 7

Runoff = 2.98 cfs @ 12.07 hrs, Volume= 0.218 af, Depth> 3.79"

Runoff by SCS TR-20 method, UH=SCS, Weighted-CN, Time Span= 5.00-20.00 hrs, dt= 0.05 hrs
Type III 24-hr 10 Year Rainfall=4.40"

Area (sf)	CN	Description
28,756	98	Paved parking, HSG C
1,245	74	>75% Grass cover, Good, HSG C
30,001	97	Weighted Average
1,245		4.15% Pervious Area
28,756		95.85% Impervious Area

Tc (min)	Length (feet)	Slope (ft/ft)	Velocity (ft/sec)	Capacity (cfs)	Description
2.2	30	0.0833	0.23		**Sheet Flow,** Grass: Short n= 0.150 P2= 3.00"
1.4	120	0.0210	1.41		**Sheet Flow,** Smooth surfaces n= 0.011 P2= 3.00"
1.2	225	0.0220	3.01		**Shallow Concentrated Flow,** Paved Kv= 20.3 fps
4.8	375	Total			

Summary for Subcatchment 8S: Subarea 8

Runoff = 1.11 cfs @ 12.03 hrs, Volume= 0.075 af, Depth> 3.70"

Runoff by SCS TR-20 method, UH=SCS, Weighted-CN, Time Span= 5.00-20.00 hrs, dt= 0.05 hrs
Type III 24-hr 10 Year Rainfall=4.40"

Area (sf)	CN	Description
9,815	98	Paved parking, HSG C
717	74	>75% Grass cover, Good, HSG C
10,532	96	Weighted Average
717		6.81% Pervious Area
9,815		93.19% Impervious Area

Tc (min)	Length (feet)	Slope (ft/ft)	Velocity (ft/sec)	Capacity (cfs)	Description
1.0	25	0.4400	0.43		**Sheet Flow,** Grass: Short n= 0.150 P2= 3.00"
1.0	115	0.0480	1.94		**Sheet Flow,** Smooth surfaces n= 0.011 P2= 3.00"
2.0	140	Total			

Summary for Subcatchment 9S: Subarea 9

Runoff = 1.41 cfs @ 12.02 hrs, Volume= 0.095 af, Depth> 3.70"

Runoff by SCS TR-20 method, UH=SCS, Weighted-CN, Time Span= 5.00-20.00 hrs, dt= 0.05 hrs
Type III 24-hr 10 Year Rainfall=4.40"

Area (sf)	CN	Description
12,458	98	Paved parking, HSG C
1,009	74	>75% Grass cover, Good, HSG C
13,467	96	Weighted Average
1,009		7.49% Pervious Area
12,458		92.51% Impervious Area

Tc (min)	Length (feet)	Slope (ft/ft)	Velocity (ft/sec)	Capacity (cfs)	Description
0.4	10	0.7000	0.43		**Sheet Flow,** Grass: Short n= 0.150 P2= 3.00"
1.0	130	0.0540	2.09		**Sheet Flow,** Smooth surfaces n= 0.011 P2= 3.00"
0.2	25	0.0184	2.75		**Shallow Concentrated Flow,** Paved Kv= 20.3 fps
1.6	165	Total			

Summary for Subcatchment 10S: Subarea 10

Runoff = 0.97 cfs @ 12.03 hrs, Volume= 0.066 af, Depth> 3.79"

Runoff by SCS TR-20 method, UH=SCS, Weighted-CN, Time Span= 5.00-20.00 hrs, dt= 0.05 hrs
Type III 24-hr 10 Year Rainfall=4.40"

Area (sf)	CN	Description
8,624	98	Paved parking, HSG C
480	74	>75% Grass cover, Good, HSG C
9,104	97	Weighted Average
480		5.27% Pervious Area
8,624		94.73% Impervious Area

Tc (min)	Length (feet)	Slope (ft/ft)	Velocity (ft/sec)	Capacity (cfs)	Description
0.5	10	0.3000	0.31		**Sheet Flow,** Grass: Short n= 0.150 P2= 3.00"
1.1	140	0.0540	2.12		**Sheet Flow,** Smooth surfaces n= 0.011 P2= 3.00"
0.5	45	0.0056	1.52		**Shallow Concentrated Flow,** Paved Kv= 20.3 fps
2.1	195	Total			

Summary for Subcatchment 11S: Subarea 11

Runoff = 2.86 cfs @ 12.01 hrs, Volume= 0.191 af, Depth> 3.87"

Runoff by SCS TR-20 method, UH=SCS, Weighted-CN, Time Span= 5.00-20.00 hrs, dt= 0.05 hrs
Type III 24-hr 10 Year Rainfall=4.40"

Area (sf)	CN	Description
25,812	98	Roofs, HSG C
25,812		100.00% Impervious Area

Tc (min)	Length (feet)	Slope (ft/ft)	Velocity (ft/sec)	Capacity (cfs)	Description
0.7	80	0.0500	1.84		**Sheet Flow,** Smooth surfaces n= 0.011 P2= 3.00"
0.1	110	0.2500	18.57	3.65	**Pipe Channel,** 6.0" Round Area= 0.2 sf Perim= 1.6' r= 0.13' n= 0.010 PVC, smooth interior
0.8	190	Total			

Summary for Subcatchment 12S: Subarea 12

Runoff = 9.19 cfs @ 12.03 hrs, Volume= 0.620 af, Depth> 3.70"

Runoff by SCS TR-20 method, UH=SCS, Weighted-CN, Time Span= 5.00-20.00 hrs, dt= 0.05 hrs
Type III 24-hr 10 Year Rainfall=4.40"

Area (sf)	CN	Description
78,848	98	Paved parking, HSG C
8,732	74	>75% Grass cover, Good, HSG C
87,580	96	Weighted Average
8,732		9.97% Pervious Area
78,848		90.03% Impervious Area

Tc (min)	Length (feet)	Slope (ft/ft)	Velocity (ft/sec)	Capacity (cfs)	Description
1.3	100	0.0170	1.25		**Sheet Flow,** Smooth surfaces n= 0.011 P2= 3.00"
0.6	110	0.0250	3.21		**Shallow Concentrated Flow,** Paved Kv= 20.3 fps
0.0	20	0.2500	7.50		**Shallow Concentrated Flow,** Grassed Waterway Kv= 15.0 fps
1.9	230	Total			

Summary for Reach 3R: Design Point

Inflow Area = 6.075 ac, 88.04% Impervious, Inflow Depth > 3.51" for 10 Year event
Inflow = 10.73 cfs @ 12.22 hrs, Volume= 1.777 af
Outflow = 10.73 cfs @ 12.22 hrs, Volume= 1.777 af, Atten= 0%, Lag= 0.0 min

Routing by Stor-Ind+Trans method, Time Span= 5.00-20.00 hrs, dt= 0.05 hrs
Max. Velocity= 11.25 fps, Min. Travel Time= 0.0 min
Avg. Velocity = 5.78 fps, Avg. Travel Time= 0.0 min

Peak Storage= 10 cf @ 12.22 hrs
Average Depth at Peak Storage= 0.69'
Bank-Full Depth= 2.00' Flow Area= 3.1 sf, Capacity= 42.45 cfs

24.0" Round Pipe
n= 0.012
Length= 10.0' Slope= 0.0300 '/'
Inlet Invert= 0.00', Outlet Invert= -0.30'

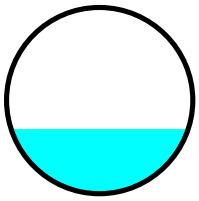

Summary for Pond 1P: Retention Pond

Inflow Area = 6.075 ac, 88.04% Impervious, Inflow Depth > 3.62" for 10 Year event
Inflow = 26.26 cfs @ 12.04 hrs, Volume= 1.834 af
Outflow = 10.73 cfs @ 12.22 hrs, Volume= 1.777 af, Atten= 59%, Lag= 10.9 min
Primary = 8.49 cfs @ 12.22 hrs, Volume= 1.732 af
Secondary = 2.24 cfs @ 12.22 hrs, Volume= 0.045 af

Routing by Stor-Ind method, Time Span= 5.00-20.00 hrs, dt= 0.05 hrs
Peak Elev= 291.36' @ 12.22 hrs Surf.Area= 6,530 sf Storage= 19,721 cf

Plug-Flow detention time= 41.9 min calculated for 1.771 af (97% of inflow)
Center-of-Mass det. time= 29.1 min (771.9 - 742.8)

Volume	Invert	Avail.Storage	Storage Description
#1	287.55'	23,975 cf	**Custom Stage Data (Prismatic)** Listed below

Elevation (feet)	Surf.Area (sq-ft)	Inc.Store (cubic-feet)	Cum.Store (cubic-feet)
287.55	3,883	0	0
288.00	4,172	1,812	1,812
289.00	4,817	4,495	6,307
290.00	5,494	5,156	11,462
291.00	6,255	5,875	17,337
292.00	7,022	6,639	23,975

Device	Routing	Invert	Outlet Devices
#1	Primary	288.00'	**24.0" W x 6.0" H Vert. Orifice/Grate** C= 0.600
#2	Secondary	291.00'	**3.0' long Sharp-Crested Rectangular Weir** 2 End Contraction(s) 0.5' Crest Height

Primary OutFlow Max=8.48 cfs @ 12.22 hrs HW=291.35' (Free Discharge)
└**1=Orifice/Grate** (Orifice Controls 8.48 cfs @ 8.48 fps)

Secondary OutFlow Max=2.17 cfs @ 12.22 hrs HW=291.35' (Free Discharge)
└**2=Sharp-Crested Rectangular Weir** (Weir Controls 2.17 cfs @ 2.11 fps)

Summary for Pond 1Pz: Detention/Retention Pond Sizing

Volume	Invert	Avail.Storage	Storage Description
#1	281.00'	37,418 cf	**Custom Stage Data (Prismatic)** Listed below (Recalc)

Elevation (feet)	Surf.Area (sq-ft)	Inc.Store (cubic-feet)	Cum.Store (cubic-feet)
281.00	472	0	0
282.00	880	676	676
283.00	1,352	1,116	1,792
284.00	1,846	1,599	3,391
285.00	2,373	2,110	5,501
286.00	2,938	2,656	8,156
287.00	3,544	3,241	11,397
288.00	4,172	3,858	15,255
289.00	4,817	4,495	19,750
290.00	5,494	5,156	24,905
291.00	6,255	5,875	30,780
292.00	7,022	6,639	37,418

Summary for Pond 8P: CB8

Inflow Area = 2.265 ac, 79.55% Impervious, Inflow Depth > 3.41" for 10 Year event
Inflow = 9.51 cfs @ 12.05 hrs, Volume= 0.643 af
Outflow = 9.51 cfs @ 12.05 hrs, Volume= 0.643 af, Atten= 0%, Lag= 0.0 min
Primary = 9.51 cfs @ 12.05 hrs, Volume= 0.643 af

Routing by Stor-Ind method, Time Span= 5.00-20.00 hrs, dt= 0.05 hrs
Peak Elev= 298.67' @ 12.05 hrs

Device	Routing	Invert	Outlet Devices
#1	Primary	295.92'	**18.0" Round Culvert** L= 72.0' CPP, projecting, no headwall, Ke= 0.900 Inlet / Outlet Invert= 295.92' / 295.56' S= 0.0050 '/' Cc= 0.900 n= 0.013 Corrugated PE, smooth interior, Flow Area= 1.77 sf

Primary OutFlow Max=9.41 cfs @ 12.05 hrs HW=298.63' (Free Discharge)
└**1=Culvert** (Inlet Controls 9.41 cfs @ 5.33 fps)

Summary for Pond CB1: CB1

Inflow Area = 0.336 ac, 59.71% Impervious, Inflow Depth > 2.92" for 10 Year event
Inflow = 1.30 cfs @ 12.05 hrs, Volume= 0.082 af
Outflow = 1.30 cfs @ 12.05 hrs, Volume= 0.082 af, Atten= 0%, Lag= 0.0 min
Primary = 1.30 cfs @ 12.05 hrs, Volume= 0.082 af

Routing by Stor-Ind method, Time Span= 5.00-20.00 hrs, dt= 0.05 hrs
Peak Elev= 299.42' @ 12.05 hrs

Device	Routing	Invert	Outlet Devices
#1	Primary	298.73'	**12.0" Round Culvert** L= 85.0' CPP, projecting, no headwall, Ke= 0.900 Inlet / Outlet Invert= 298.73' / 297.88' S= 0.0100 '/' Cc= 0.900 n= 0.013 Corrugated PE, smooth interior, Flow Area= 0.79 sf

Primary OutFlow Max=1.29 cfs @ 12.05 hrs HW=299.42' (Free Discharge)
└**1=Culvert** (Inlet Controls 1.29 cfs @ 2.23 fps)

Summary for Pond CB10: CB10

Inflow Area = 3.375 ac, 85.26% Impervious, Inflow Depth > 3.54" for 10 Year event
Inflow = 14.29 cfs @ 12.04 hrs, Volume= 0.996 af
Outflow = 14.29 cfs @ 12.04 hrs, Volume= 0.996 af, Atten= 0%, Lag= 0.0 min
Primary = 14.29 cfs @ 12.04 hrs, Volume= 0.996 af

Routing by Stor-Ind method, Time Span= 5.00-20.00 hrs, dt= 0.05 hrs
Peak Elev= 300.19' @ 12.04 hrs

Device	Routing	Invert	Outlet Devices
#1	Primary	294.92'	**18.0" Round Culvert** L= 130.0' CPP, projecting, no headwall, Ke= 0.900 Inlet / Outlet Invert= 294.92' / 292.50' S= 0.0186 '/' Cc= 0.900 n= 0.013 Corrugated PE, smooth interior, Flow Area= 1.77 sf

Primary OutFlow Max=13.97 cfs @ 12.04 hrs HW=300.00' (Free Discharge)
└**1=Culvert** (Inlet Controls 13.97 cfs @ 7.91 fps)

Summary for Pond CB11: CB11

Inflow Area = 0.689 ac, 95.85% Impervious, Inflow Depth > 3.79" for 10 Year event
Inflow = 2.98 cfs @ 12.07 hrs, Volume= 0.218 af
Outflow = 2.98 cfs @ 12.07 hrs, Volume= 0.218 af, Atten= 0%, Lag= 0.0 min
Primary = 2.98 cfs @ 12.07 hrs, Volume= 0.218 af

Routing by Stor-Ind method, Time Span= 5.00-20.00 hrs, dt= 0.05 hrs
Peak Elev= 294.52' @ 12.07 hrs

Device	Routing	Invert	Outlet Devices
#1	Primary	293.59'	**18.0" Round Culvert** L= 230.0' CPP, projecting, no headwall, Ke= 0.900

Inlet / Outlet Invert= 293.59' / 288.85' S= 0.0206 '/' Cc= 0.900
n= 0.013 Corrugated PE, smooth interior, Flow Area= 1.77 sf

Primary OutFlow Max=2.87 cfs @ 12.07 hrs HW=294.50' (Free Discharge)
└**1=Culvert** (Inlet Controls 2.87 cfs @ 2.56 fps)

Summary for Pond CB2: CB2

Inflow Area = 1.427 ac, 70.09% Impervious, Inflow Depth > 3.20" for 10 Year event
Inflow = 5.75 cfs @ 12.06 hrs, Volume= 0.380 af
Outflow = 5.75 cfs @ 12.06 hrs, Volume= 0.380 af, Atten= 0%, Lag= 0.0 min
Primary = 5.75 cfs @ 12.06 hrs, Volume= 0.380 af

Routing by Stor-Ind method, Time Span= 5.00-20.00 hrs, dt= 0.05 hrs
Peak Elev= 298.27' @ 12.06 hrs

Device	Routing	Invert	Outlet Devices
#1	Primary	296.80'	**18.0" Round Culvert**
			L= 40.0' CPP, projecting, no headwall, Ke= 0.900
			Inlet / Outlet Invert= 296.80' / 296.00' S= 0.0200 '/' Cc= 0.900
			n= 0.013 Corrugated PE, smooth interior, Flow Area= 1.77 sf

Primary OutFlow Max=5.65 cfs @ 12.06 hrs HW=298.25' (Free Discharge)
└**1=Culvert** (Inlet Controls 5.65 cfs @ 3.23 fps)

Summary for Pond CB3: CB3

Inflow Area = 0.779 ac, 72.51% Impervious, Inflow Depth > 3.27" for 10 Year event
Inflow = 3.18 cfs @ 12.06 hrs, Volume= 0.212 af
Outflow = 3.18 cfs @ 12.06 hrs, Volume= 0.212 af, Atten= 0%, Lag= 0.0 min
Primary = 3.18 cfs @ 12.06 hrs, Volume= 0.212 af

Routing by Stor-Ind method, Time Span= 5.00-20.00 hrs, dt= 0.05 hrs
Peak Elev= 298.62' @ 12.06 hrs

Device	Routing	Invert	Outlet Devices
#1	Primary	297.53'	**15.0" Round Culvert**
			L= 65.0' CPP, projecting, no headwall, Ke= 0.900
			Inlet / Outlet Invert= 297.53' / 296.88' S= 0.0100 '/' Cc= 0.900
			n= 0.013 Corrugated PE, smooth interior, Flow Area= 1.23 sf

Primary OutFlow Max=3.11 cfs @ 12.06 hrs HW=298.60' (Free Discharge)
└**1=Culvert** (Inlet Controls 3.11 cfs @ 2.78 fps)

Summary for Pond CB4: CB4

Inflow Area = 0.505 ac, 75.28% Impervious, Inflow Depth > 3.35" for 10 Year event
Inflow = 2.11 cfs @ 12.06 hrs, Volume= 0.141 af
Outflow = 2.11 cfs @ 12.06 hrs, Volume= 0.141 af, Atten= 0%, Lag= 0.0 min
Primary = 2.11 cfs @ 12.06 hrs, Volume= 0.141 af

Routing by Stor-Ind method, Time Span= 5.00-20.00 hrs, dt= 0.05 hrs
Peak Elev= 299.57' @ 12.05 hrs

Device	Routing	Invert	Outlet Devices
#1	Primary	298.57'	**12.0" Round Culvert** L= 96.0' CPP, projecting, no headwall, Ke= 0.900 Inlet / Outlet Invert= 298.57' / 297.61' S= 0.0100 '/' Cc= 0.900 n= 0.013 Corrugated PE, smooth interior, Flow Area= 0.79 sf

Primary OutFlow Max=2.08 cfs @ 12.06 hrs HW=299.55' (Free Discharge)
└**1=Culvert** (Inlet Controls 2.08 cfs @ 2.66 fps)

Summary for Pond CB5: CB5

Inflow Area = 0.201 ac, 78.10% Impervious, Inflow Depth > 3.41" for 10 Year event
Inflow = 0.87 cfs @ 12.05 hrs, Volume= 0.057 af
Outflow = 0.87 cfs @ 12.05 hrs, Volume= 0.057 af, Atten= 0%, Lag= 0.0 min
Primary = 0.87 cfs @ 12.05 hrs, Volume= 0.057 af

Routing by Stor-Ind method, Time Span= 5.00-20.00 hrs, dt= 0.05 hrs
Peak Elev= 299.96' @ 12.05 hrs

Device	Routing	Invert	Outlet Devices
#1	Primary	299.41'	**12.0" Round Culvert** L= 76.0' CPP, projecting, no headwall, Ke= 0.900 Inlet / Outlet Invert= 299.41' / 298.65' S= 0.0100 '/' Cc= 0.900 n= 0.013 Corrugated PE, smooth interior, Flow Area= 0.79 sf

Primary OutFlow Max=0.87 cfs @ 12.05 hrs HW=299.96' (Free Discharge)
└**1=Culvert** (Inlet Controls 0.87 cfs @ 1.98 fps)

Summary for Pond CB6: CB6

Inflow Area = 0.596 ac, 96.67% Impervious, Inflow Depth > 3.79" for 10 Year event
Inflow = 2.69 cfs @ 12.05 hrs, Volume= 0.188 af
Outflow = 2.69 cfs @ 12.05 hrs, Volume= 0.188 af, Atten= 0%, Lag= 0.0 min
Primary = 2.69 cfs @ 12.05 hrs, Volume= 0.188 af

Routing by Stor-Ind method, Time Span= 5.00-20.00 hrs, dt= 0.05 hrs
Peak Elev= 297.37' @ 12.05 hrs

Device	Routing	Invert	Outlet Devices
#1	Primary	296.35'	**15.0" Round Culvert** L= 70.0' CPP, projecting, no headwall, Ke= 0.900 Inlet / Outlet Invert= 296.35' / 296.00' S= 0.0050 '/' Cc= 0.900 n= 0.013 Corrugated PE, smooth interior, Flow Area= 1.23 sf

Primary OutFlow Max=2.65 cfs @ 12.05 hrs HW=297.36' (Free Discharge)
└**1=Culvert** (Barrel Controls 2.65 cfs @ 3.42 fps)

Summary for Pond CB7: CB7

Inflow Area = 0.689 ac, 95.85% Impervious, Inflow Depth > 3.79" for 10 Year event
Inflow = 2.98 cfs @ 12.07 hrs, Volume= 0.218 af
Outflow = 2.98 cfs @ 12.07 hrs, Volume= 0.218 af, Atten= 0%, Lag= 0.0 min
Primary = 2.98 cfs @ 12.07 hrs, Volume= 0.218 af

Routing by Stor-Ind method, Time Span= 5.00-20.00 hrs, dt= 0.05 hrs
Peak Elev= 295.93' @ 12.07 hrs

Device	Routing	Invert	Outlet Devices
#1	Primary	294.89'	**15.0" Round Culvert** L= 165.0' CPP, projecting, no headwall, Ke= 0.900 Inlet / Outlet Invert= 294.89' / 293.45' S= 0.0087 '/' Cc= 0.900 n= 0.013 Corrugated PE, smooth interior, Flow Area= 1.23 sf

Primary OutFlow Max=2.87 cfs @ 12.07 hrs HW=295.90' (Free Discharge)
└**1=Culvert** (Inlet Controls 2.87 cfs @ 2.70 fps)

Summary for Pond CB9: CB9

Inflow Area = 2.574 ac, 81.10% Impervious, Inflow Depth > 3.44" for 10 Year event
Inflow = 10.85 cfs @ 12.05 hrs, Volume= 0.739 af
Outflow = 10.85 cfs @ 12.05 hrs, Volume= 0.739 af, Atten= 0%, Lag= 0.0 min
Primary = 10.85 cfs @ 12.05 hrs, Volume= 0.739 af

Routing by Stor-Ind method, Time Span= 5.00-20.00 hrs, dt= 0.05 hrs
Peak Elev= 298.84' @ 12.05 hrs

Device	Routing	Invert	Outlet Devices
#1	Primary	295.48'	**18.0" Round Culvert** L= 95.0' CPP, projecting, no headwall, Ke= 0.900 Inlet / Outlet Invert= 295.48' / 295.00' S= 0.0051 '/' Cc= 0.900 n= 0.013 Corrugated PE, smooth interior, Flow Area= 1.77 sf

Primary OutFlow Max=10.85 cfs @ 12.05 hrs HW=298.84' (Free Discharge)
└**1=Culvert** (Inlet Controls 10.85 cfs @ 6.14 fps)

POST DEVELOPMENT - 25 YEAR

Time span=5.00-20.00 hrs, dt=0.05 hrs, 301 points
Runoff by SCS TR-20 method, UH=SCS, Weighted-CN
Reach routing by Stor-Ind+Trans method - Pond routing by Stor-Ind method

Subcatchment 1S: Subarea 1 Runoff Area=14,618 sf 59.71% Impervious Runoff Depth>3.55"
Flow Length=160' Tc=3.0 min CN=88 Runoff=1.57 cfs 0.099 af

Subcatchment 2S: Subarea 2 Runoff Area=13,613 sf 75.19% Impervious Runoff Depth>3.96"
Flow Length=175' Tc=4.3 min CN=92 Runoff=1.51 cfs 0.103 af

Subcatchment 3S: Subarea 3 Runoff Area=11,953 sf 67.41% Impervious Runoff Depth>3.76"
Flow Length=175' Tc=4.2 min CN=90 Runoff=1.28 cfs 0.086 af

Subcatchment 4S: Subarea 4 Runoff Area=13,216 sf 73.41% Impervious Runoff Depth>3.96"
Flow Length=155' Tc=4.2 min CN=92 Runoff=1.47 cfs 0.100 af

Subcatchment 5S: Subarea 5 Runoff Area=8,770 sf 78.10% Impervious Runoff Depth>4.06"
Flow Length=165' Tc=3.2 min CN=93 Runoff=1.03 cfs 0.068 af

Subcatchment 6S: Subarea 6 Runoff Area=25,949 sf 96.67% Impervious Runoff Depth>4.43"
Flow Length=380' Tc=3.7 min CN=97 Runoff=3.13 cfs 0.220 af

Subcatchment 7S: Subarea 7 Runoff Area=30,001 sf 95.85% Impervious Runoff Depth>4.43"
Flow Length=375' Tc=4.8 min CN=97 Runoff=3.47 cfs 0.254 af

Subcatchment 8S: Subarea 8 Runoff Area=10,532 sf 93.19% Impervious Runoff Depth>4.35"
Flow Length=140' Tc=2.0 min CN=96 Runoff=1.29 cfs 0.088 af

Subcatchment 9S: Subarea 9 Runoff Area=13,467 sf 92.51% Impervious Runoff Depth>4.35"
Flow Length=165' Tc=1.6 min CN=96 Runoff=1.65 cfs 0.112 af

Subcatchment 10S: Subarea 10 Runoff Area=9,104 sf 94.73% Impervious Runoff Depth>4.43"
Flow Length=195' Tc=2.1 min CN=97 Runoff=1.13 cfs 0.077 af

Subcatchment 11S: Subarea 11 Runoff Area=25,812 sf 100.00% Impervious Runoff Depth>4.51"
Flow Length=190' Tc=0.8 min CN=98 Runoff=3.33 cfs 0.223 af

Subcatchment 12S: Subarea 12 Runoff Area=87,580 sf 90.03% Impervious Runoff Depth>4.35"
Flow Length=230' Tc=1.9 min CN=96 Runoff=10.72 cfs 0.728 af

Reach 3R: Design Point Avg. Flow Depth=0.83' Max Vel=12.38 fps Inflow=15.35 cfs 2.101 af
24.0" Round Pipe n=0.012 L=10.0' S=0.0300 '/' Capacity=42.45 cfs Outflow=15.36 cfs 2.101 af

Pond 1P: Retention Pond Peak Elev=291.70' Storage=21,989 cf Inflow=30.73 cfs 2.159 af
Primary=8.94 cfs 1.959 af Secondary=6.41 cfs 0.142 af Outflow=15.35 cfs 2.101 af

Pond 1Pz: Detention/Retention Pond Sizing Peak Elev=0.00' Storage=0 cf

Pond 8P: CB8 Peak Elev=299.45' Inflow=11.21 cfs 0.764 af
18.0" Round Culvert n=0.013 L=72.0' S=0.0050 '/' Outflow=11.21 cfs 0.764 af

Pond CB1: CB1 Peak Elev=299.51' Inflow=1.57 cfs 0.099 af
12.0" Round Culvert n=0.013 L=85.0' S=0.0100 '/' Outflow=1.57 cfs 0.099 af

Pond CB10: CB10 Peak Elev=301.90' Inflow=16.78 cfs 1.176 af
18.0" Round Culvert n=0.013 L=130.0' S=0.0186 '/' Outflow=16.78 cfs 1.176 af

Pond CB11: CB11 Peak Elev=294.61' Inflow=3.47 cfs 0.254 af
18.0" Round Culvert n=0.013 L=230.0' S=0.0206 '/' Outflow=3.47 cfs 0.254 af

Pond CB2: CB2 Peak Elev=298.58' Inflow=6.83 cfs 0.457 af
18.0" Round Culvert n=0.013 L=40.0' S=0.0200 '/' Outflow=6.83 cfs 0.457 af

Pond CB3: CB3 Peak Elev=298.81' Inflow=3.77 cfs 0.254 af
15.0" Round Culvert n=0.013 L=65.0' S=0.0100 '/' Outflow=3.77 cfs 0.254 af

Pond CB4: CB4 Peak Elev=299.76' Inflow=2.49 cfs 0.168 af
12.0" Round Culvert n=0.013 L=96.0' S=0.0100 '/' Outflow=2.49 cfs 0.168 af

Pond CB5: CB5 Peak Elev=300.01' Inflow=1.03 cfs 0.068 af
12.0" Round Culvert n=0.013 L=76.0' S=0.0100 '/' Outflow=1.03 cfs 0.068 af

Pond CB6: CB6 Peak Elev=297.48' Inflow=3.13 cfs 0.220 af
15.0" Round Culvert n=0.013 L=70.0' S=0.0050 '/' Outflow=3.13 cfs 0.220 af

Pond CB7: CB7 Peak Elev=296.05' Inflow=3.47 cfs 0.254 af
15.0" Round Culvert n=0.013 L=165.0' S=0.0087 '/' Outflow=3.47 cfs 0.254 af

Pond CB9: CB9 Peak Elev=299.85' Inflow=12.78 cfs 0.876 af
18.0" Round Culvert n=0.013 L=95.0' S=0.0051 '/' Outflow=12.78 cfs 0.876 af

Total Runoff Area = 6.075 ac Runoff Volume = 2.159 af Average Runoff Depth = 4.27"
11.96% Pervious = 0.726 ac 88.04% Impervious = 5.348 ac

Summary for Subcatchment 1S: Subarea 1

Runoff = 1.57 cfs @ 12.05 hrs, Volume= 0.099 af, Depth> 3.55"

Runoff by SCS TR-20 method, UH=SCS, Weighted-CN, Time Span= 5.00-20.00 hrs, dt= 0.05 hrs
Type III 24-hr 25 Year Rainfall=5.10"

Area (sf)	CN	Description
8,728	98	Paved parking, HSG C
5,890	74	>75% Grass cover, Good, HSG C
14,618	88	Weighted Average
5,890		40.29% Pervious Area
8,728		59.71% Impervious Area

Tc (min)	Length (feet)	Slope (ft/ft)	Velocity (ft/sec)	Capacity (cfs)	Description
2.0	40	0.1750	0.33		**Sheet Flow,** Grass: Short n= 0.150 P2= 3.00"
0.2	25	0.0800	1.76		**Sheet Flow,** Smooth surfaces n= 0.011 P2= 3.00"
0.8	95	0.0530	1.95		**Sheet Flow,** Smooth surfaces n= 0.011 P2= 3.00"
3.0	160	Total			

Subcatchment 1S: Subarea 1

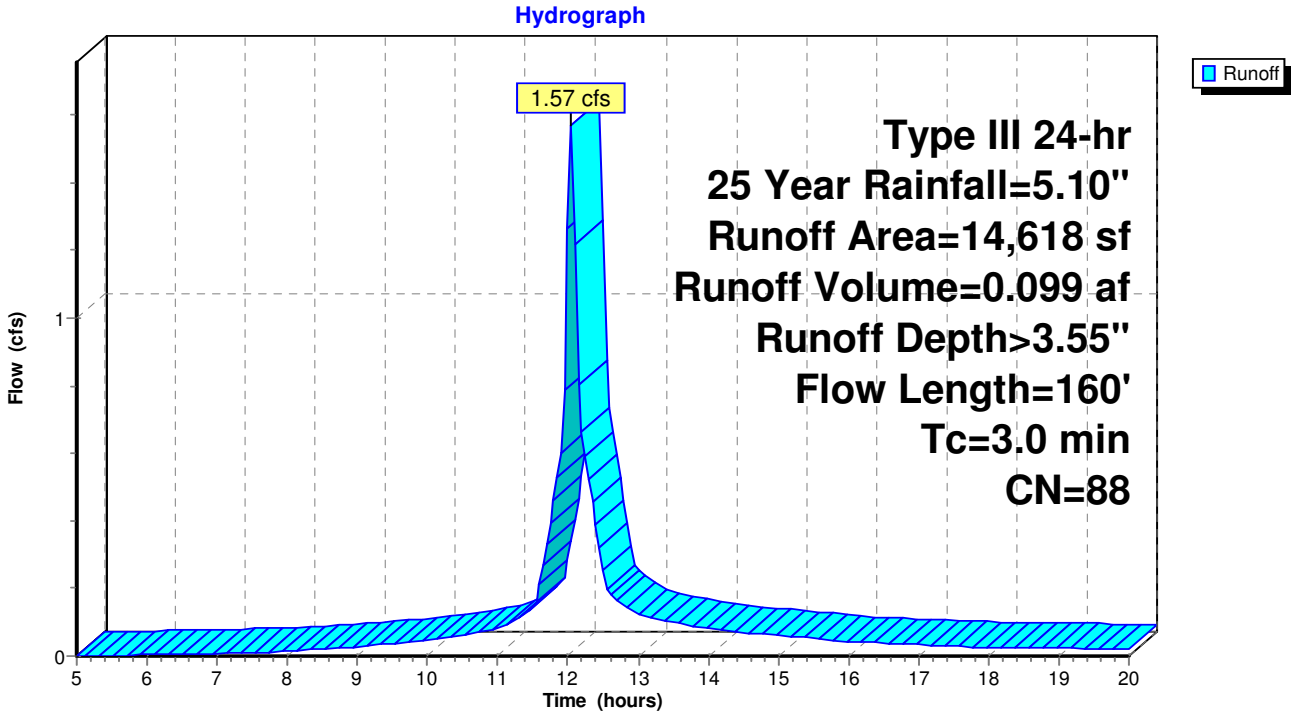

Summary for Subcatchment 2S: Subarea 2

Runoff = 1.51 cfs @ 12.06 hrs, Volume= 0.103 af, Depth> 3.96"

Runoff by SCS TR-20 method, UH=SCS, Weighted-CN, Time Span= 5.00-20.00 hrs, dt= 0.05 hrs
Type III 24-hr 25 Year Rainfall=5.10"

Area (sf)	CN	Description
10,236	98	Paved parking, HSG C
3,377	74	>75% Grass cover, Good, HSG C
13,613	92	Weighted Average
3,377		24.81% Pervious Area
10,236		75.19% Impervious Area

Tc (min)	Length (feet)	Slope (ft/ft)	Velocity (ft/sec)	Capacity (cfs)	Description
3.1	40	0.0625	0.22		**Sheet Flow,** Grass: Short n= 0.150 P2= 3.00"
0.3	35	0.1140	2.17		**Sheet Flow,** Smooth surfaces n= 0.011 P2= 3.00"
0.8	90	0.0560	1.97		**Sheet Flow,** Smooth surfaces n= 0.011 P2= 3.00"
0.1	10	0.0120	2.22		**Shallow Concentrated Flow,** Paved Kv= 20.3 fps
4.3	175	Total			

Subcatchment 2S: Subarea 2

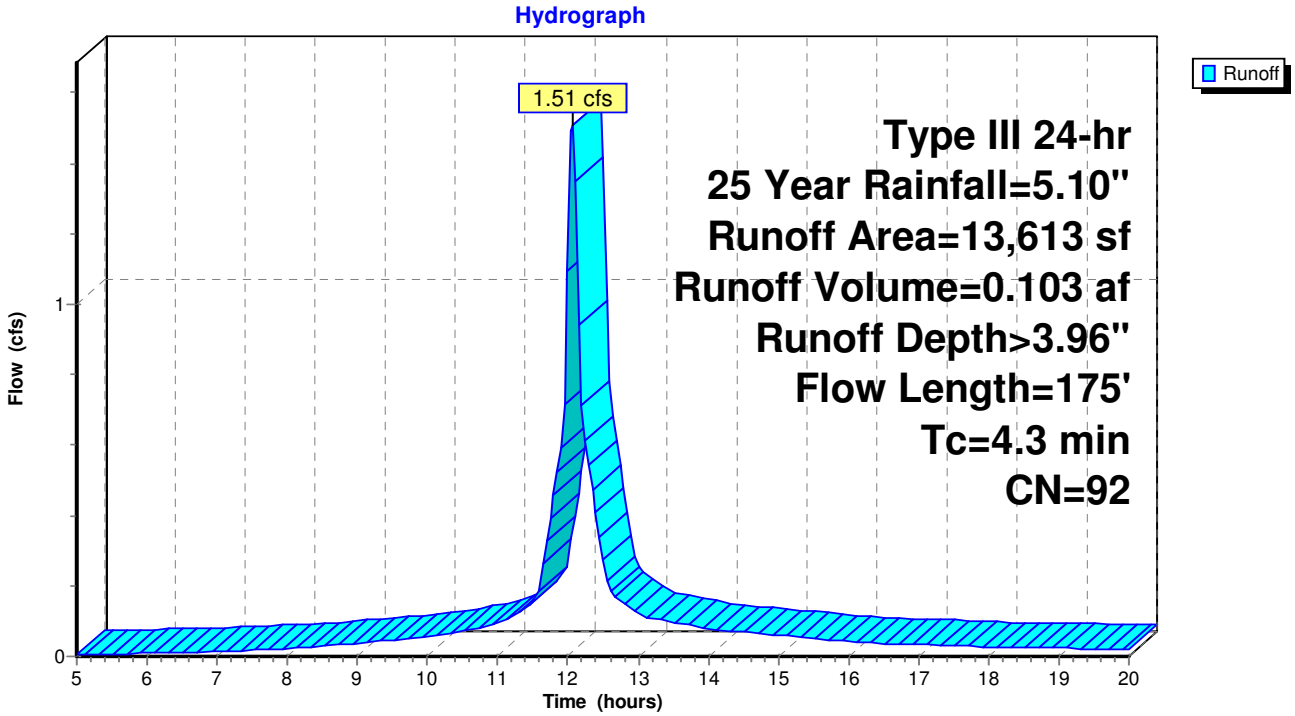

Summary for Subcatchment 3S: Subarea 3

Runoff = 1.28 cfs @ 12.06 hrs, Volume= 0.086 af, Depth> 3.76"

Runoff by SCS TR-20 method, UH=SCS, Weighted-CN, Time Span= 5.00-20.00 hrs, dt= 0.05 hrs
Type III 24-hr 25 Year Rainfall=5.10"

Area (sf)	CN	Description
8,057	98	Paved parking, HSG C
3,896	74	>75% Grass cover, Good, HSG C
11,953	90	Weighted Average
3,896		32.59% Pervious Area
8,057		67.41% Impervious Area

Tc (min)	Length (feet)	Slope (ft/ft)	Velocity (ft/sec)	Capacity (cfs)	Description
3.2	65	0.1500	0.34		**Sheet Flow,** Grass: Short n= 0.150 P2= 3.00"
0.9	95	0.0440	1.81		**Sheet Flow,** Smooth surfaces n= 0.011 P2= 3.00"
0.1	15	0.0330	3.69		**Shallow Concentrated Flow,** Paved Kv= 20.3 fps
4.2	175	Total			

Subcatchment 3S: Subarea 3

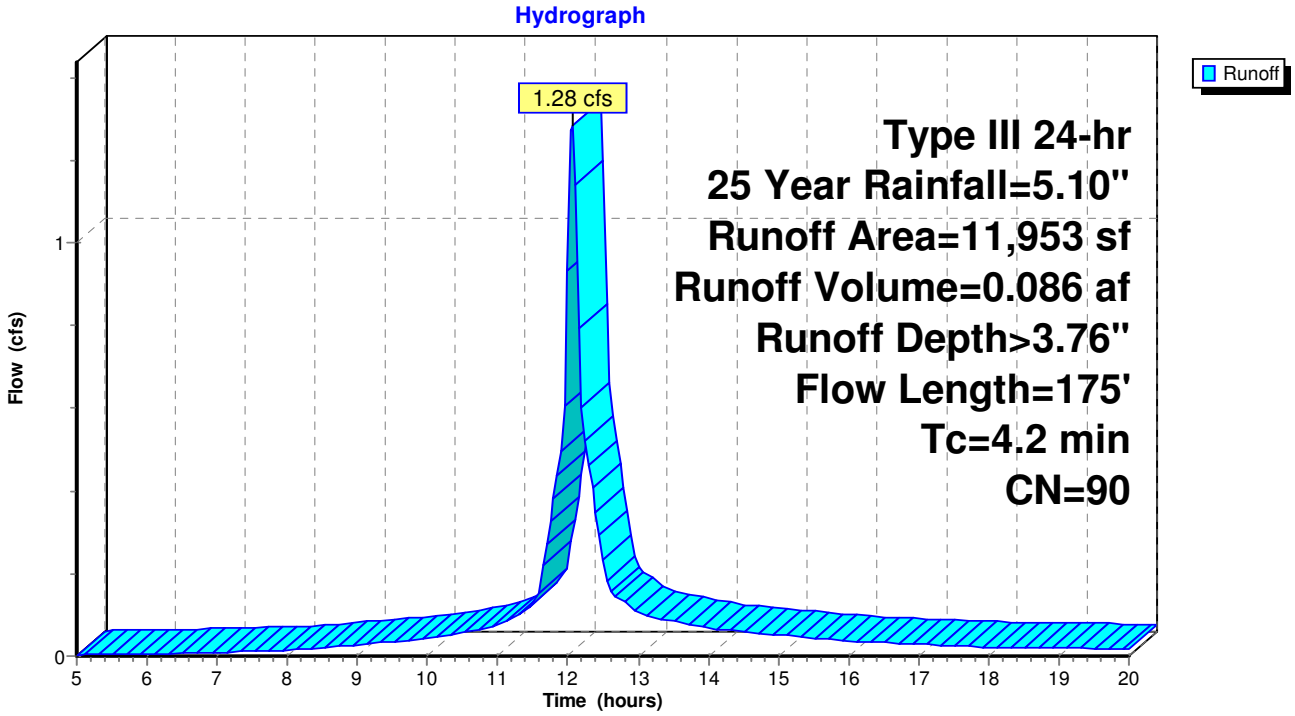

Summary for Subcatchment 4S: Subarea 4

Runoff = 1.47 cfs @ 12.06 hrs, Volume= 0.100 af, Depth> 3.96"

Runoff by SCS TR-20 method, UH=SCS, Weighted-CN, Time Span= 5.00-20.00 hrs, dt= 0.05 hrs
Type III 24-hr 25 Year Rainfall=5.10"

Area (sf)	CN	Description
9,702	98	Paved parking, HSG C
3,514	74	>75% Grass cover, Good, HSG C
13,216	92	Weighted Average
3,514		26.59% Pervious Area
9,702		73.41% Impervious Area

Tc (min)	Length (feet)	Slope (ft/ft)	Velocity (ft/sec)	Capacity (cfs)	Description
3.3	55	0.0966	0.27		**Sheet Flow,** Grass: Short n= 0.150 P2= 3.00"
0.9	95	0.0370	1.69		**Sheet Flow,** Smooth surfaces n= 0.011 P2= 3.00"
0.0	5	0.0330	3.69		**Shallow Concentrated Flow,** Paved Kv= 20.3 fps
4.2	155	Total			

Subcatchment 4S: Subarea 4

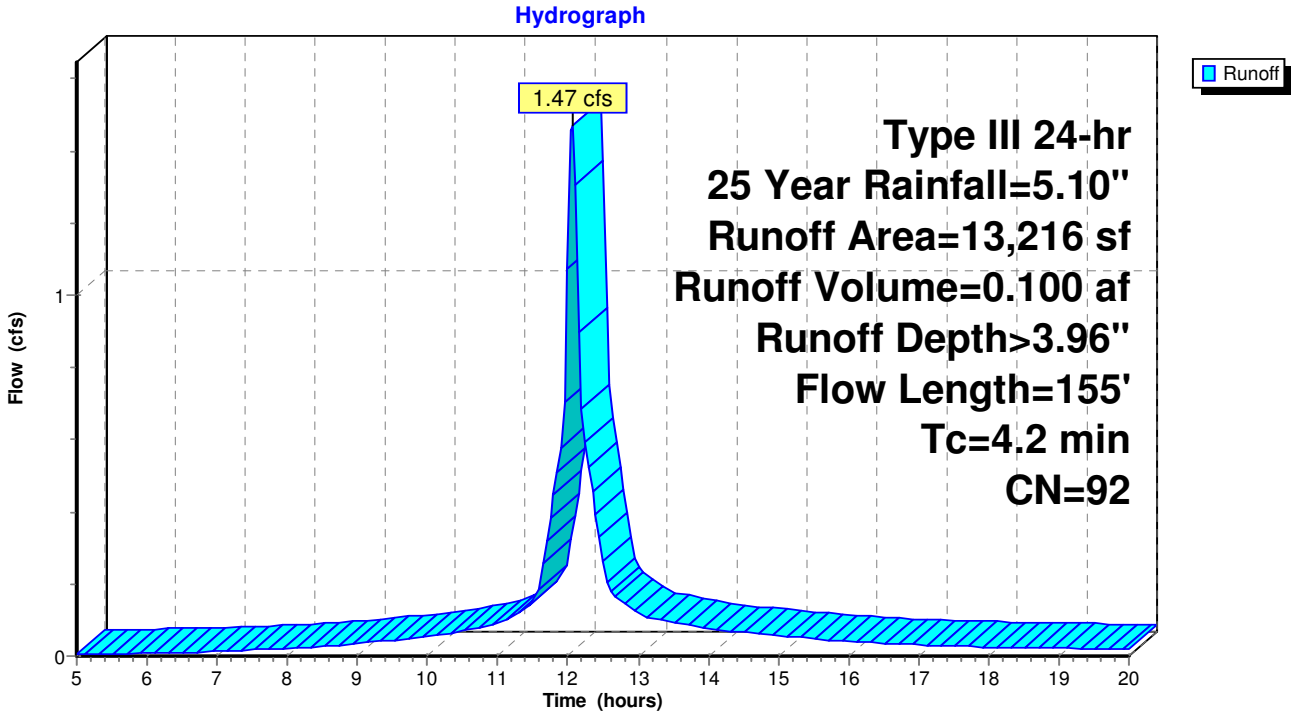

Summary for Subcatchment 5S: Subarea 5

Runoff = 1.03 cfs @ 12.05 hrs, Volume= 0.068 af, Depth> 4.06"

Runoff by SCS TR-20 method, UH=SCS, Weighted-CN, Time Span= 5.00-20.00 hrs, dt= 0.05 hrs
Type III 24-hr 25 Year Rainfall=5.10"

Area (sf)	CN	Description
6,849	98	Paved parking, HSG C
1,921	74	>75% Grass cover, Good, HSG C
8,770	93	Weighted Average
1,921		21.90% Pervious Area
6,849		78.10% Impervious Area

Tc (min)	Length (feet)	Slope (ft/ft)	Velocity (ft/sec)	Capacity (cfs)	Description
2.2	45	0.1780	0.34		**Sheet Flow,** Grass: Short n= 0.150 P2= 3.00"
0.9	100	0.0400	1.76		**Sheet Flow,** Smooth surfaces n= 0.011 P2= 3.00"
0.1	20	0.0330	3.69		**Shallow Concentrated Flow,** Paved Kv= 20.3 fps
3.2	165	Total			

Subcatchment 5S: Subarea 5

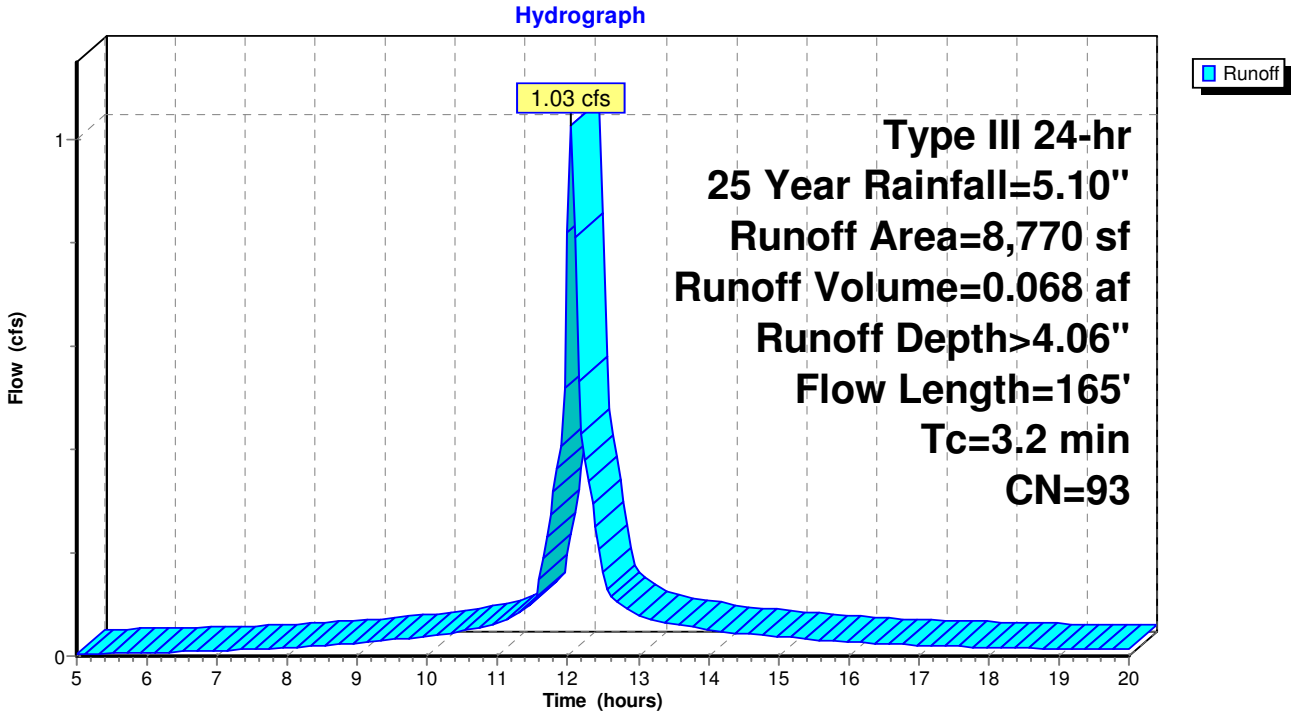

Summary for Subcatchment 6S: Subarea 6

Runoff = 3.13 cfs @ 12.05 hrs, Volume= 0.220 af, Depth> 4.43"

Runoff by SCS TR-20 method, UH=SCS, Weighted-CN, Time Span= 5.00-20.00 hrs, dt= 0.05 hrs
Type III 24-hr 25 Year Rainfall=5.10"

Area (sf)	CN	Description
25,085	98	Paved parking, HSG C
864	74	>75% Grass cover, Good, HSG C
25,949	97	Weighted Average
864		3.33% Pervious Area
25,085		96.67% Impervious Area

Tc (min)	Length (feet)	Slope (ft/ft)	Velocity (ft/sec)	Capacity (cfs)	Description
1.0	20	0.2750	0.34		**Sheet Flow,** Grass: Short n= 0.150 P2= 3.00"
1.3	130	0.0310	1.67		**Sheet Flow,** Smooth surfaces n= 0.011 P2= 3.00"
1.4	230	0.0170	2.65		**Shallow Concentrated Flow,** Paved Kv= 20.3 fps
3.7	380	Total			

Subcatchment 6S: Subarea 6

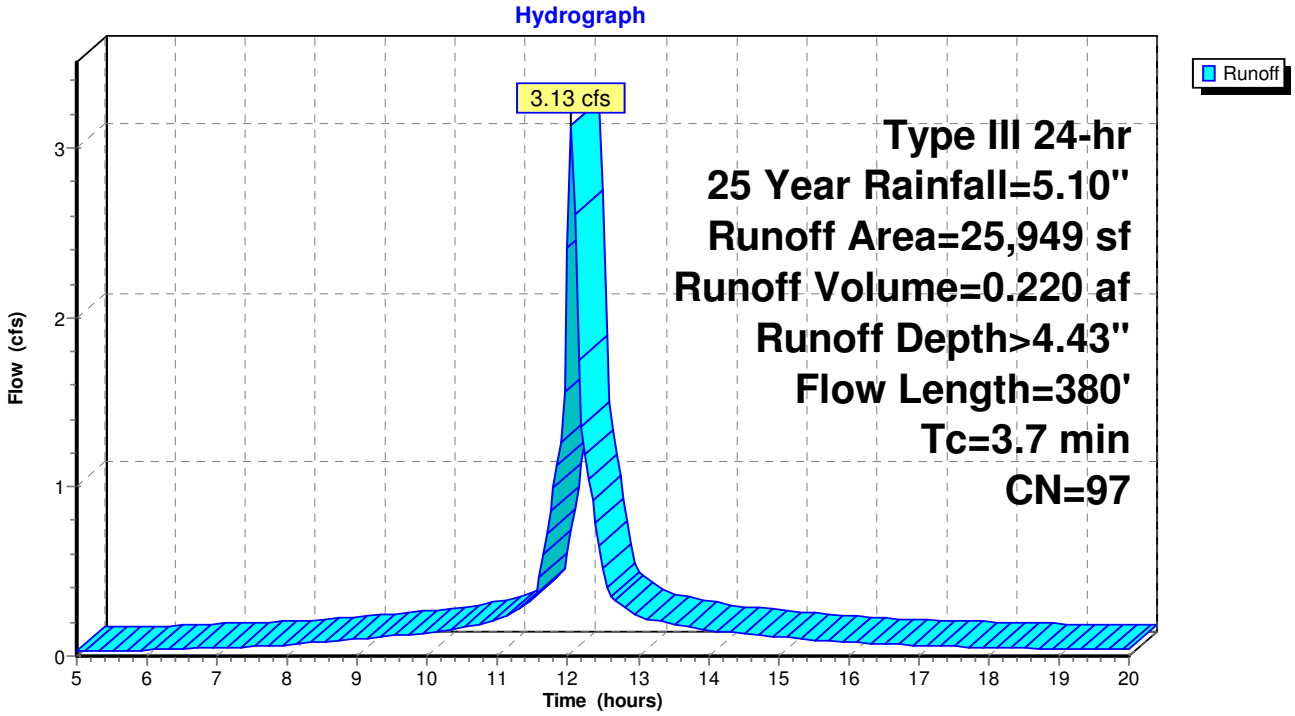

Summary for Subcatchment 7S: Subarea 7

Runoff = 3.47 cfs @ 12.07 hrs, Volume= 0.254 af, Depth> 4.43"

Runoff by SCS TR-20 method, UH=SCS, Weighted-CN, Time Span= 5.00-20.00 hrs, dt= 0.05 hrs
Type III 24-hr 25 Year Rainfall=5.10"

Area (sf)	CN	Description
28,756	98	Paved parking, HSG C
1,245	74	>75% Grass cover, Good, HSG C
30,001	97	Weighted Average
1,245		4.15% Pervious Area
28,756		95.85% Impervious Area

Tc (min)	Length (feet)	Slope (ft/ft)	Velocity (ft/sec)	Capacity (cfs)	Description
2.2	30	0.0833	0.23		**Sheet Flow,** Grass: Short n= 0.150 P2= 3.00"
1.4	120	0.0210	1.41		**Sheet Flow,** Smooth surfaces n= 0.011 P2= 3.00"
1.2	225	0.0220	3.01		**Shallow Concentrated Flow,** Paved Kv= 20.3 fps
4.8	375	Total			

Subcatchment 7S: Subarea 7

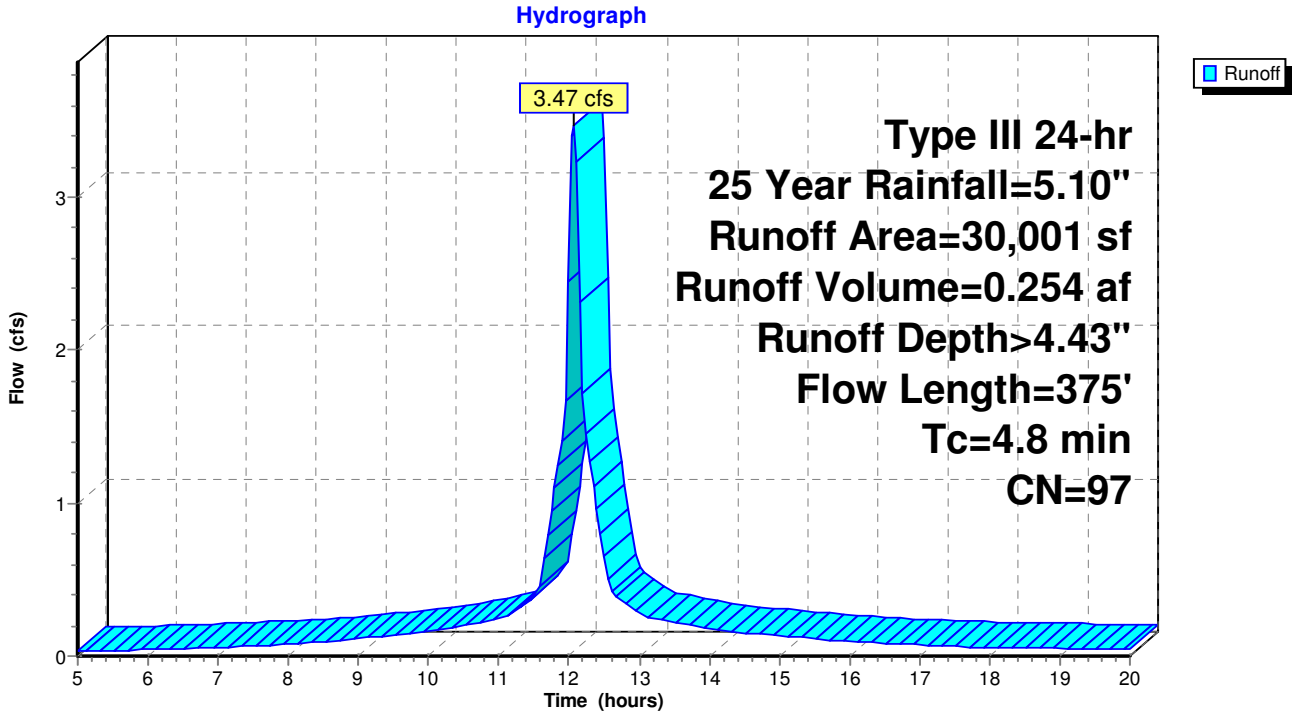

Summary for Subcatchment 8S: Subarea 8

Runoff = 1.29 cfs @ 12.03 hrs, Volume= 0.088 af, Depth> 4.35"

Runoff by SCS TR-20 method, UH=SCS, Weighted-CN, Time Span= 5.00-20.00 hrs, dt= 0.05 hrs
Type III 24-hr 25 Year Rainfall=5.10"

Area (sf)	CN	Description
9,815	98	Paved parking, HSG C
717	74	>75% Grass cover, Good, HSG C
10,532	96	Weighted Average
717		6.81% Pervious Area
9,815		93.19% Impervious Area

Tc (min)	Length (feet)	Slope (ft/ft)	Velocity (ft/sec)	Capacity (cfs)	Description
1.0	25	0.4400	0.43		**Sheet Flow,** Grass: Short n= 0.150 P2= 3.00"
1.0	115	0.0480	1.94		**Sheet Flow,** Smooth surfaces n= 0.011 P2= 3.00"
2.0	140	Total			

Subcatchment 8S: Subarea 8

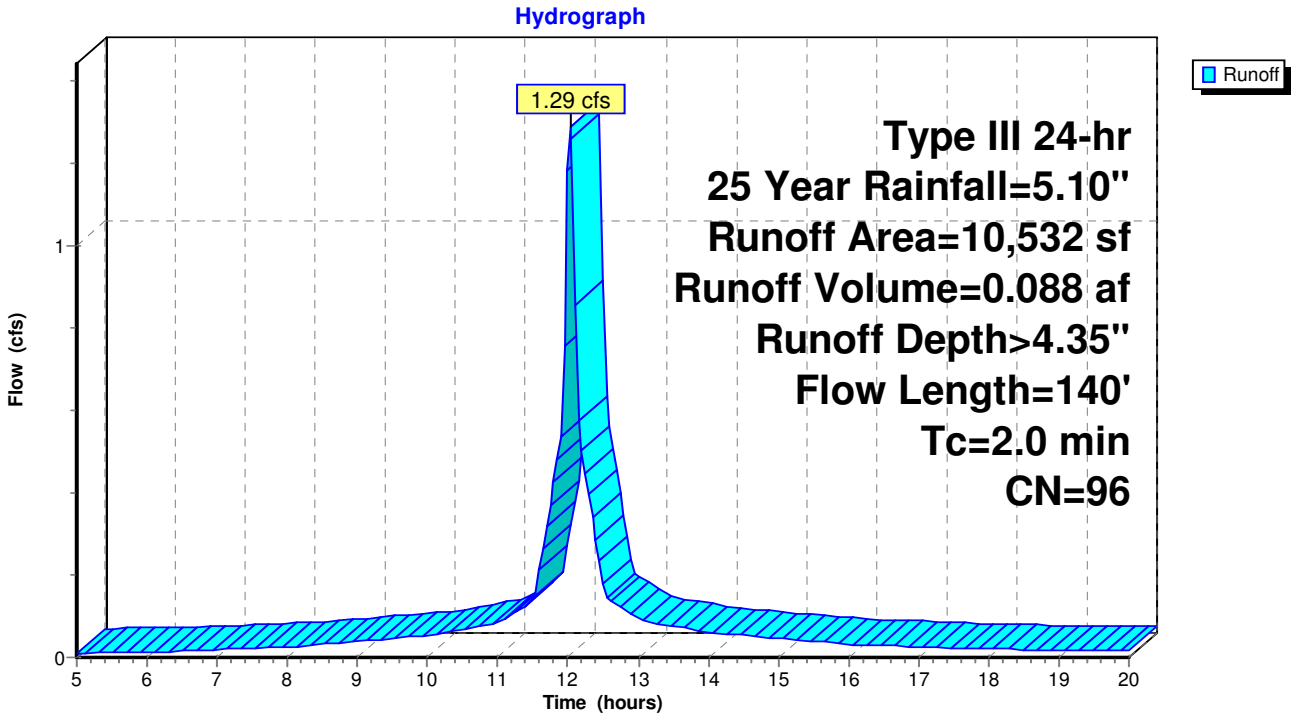

Summary for Subcatchment 9S: Subarea 9

Runoff = 1.65 cfs @ 12.02 hrs, Volume= 0.112 af, Depth> 4.35"

Runoff by SCS TR-20 method, UH=SCS, Weighted-CN, Time Span= 5.00-20.00 hrs, dt= 0.05 hrs
Type III 24-hr 25 Year Rainfall=5.10"

Area (sf)	CN	Description
12,458	98	Paved parking, HSG C
1,009	74	>75% Grass cover, Good, HSG C
13,467	96	Weighted Average
1,009		7.49% Pervious Area
12,458		92.51% Impervious Area

Tc (min)	Length (feet)	Slope (ft/ft)	Velocity (ft/sec)	Capacity (cfs)	Description
0.4	10	0.7000	0.43		**Sheet Flow,** Grass: Short n= 0.150 P2= 3.00"
1.0	130	0.0540	2.09		**Sheet Flow,** Smooth surfaces n= 0.011 P2= 3.00"
0.2	25	0.0184	2.75		**Shallow Concentrated Flow,** Paved Kv= 20.3 fps
1.6	165	Total			

Subcatchment 9S: Subarea 9

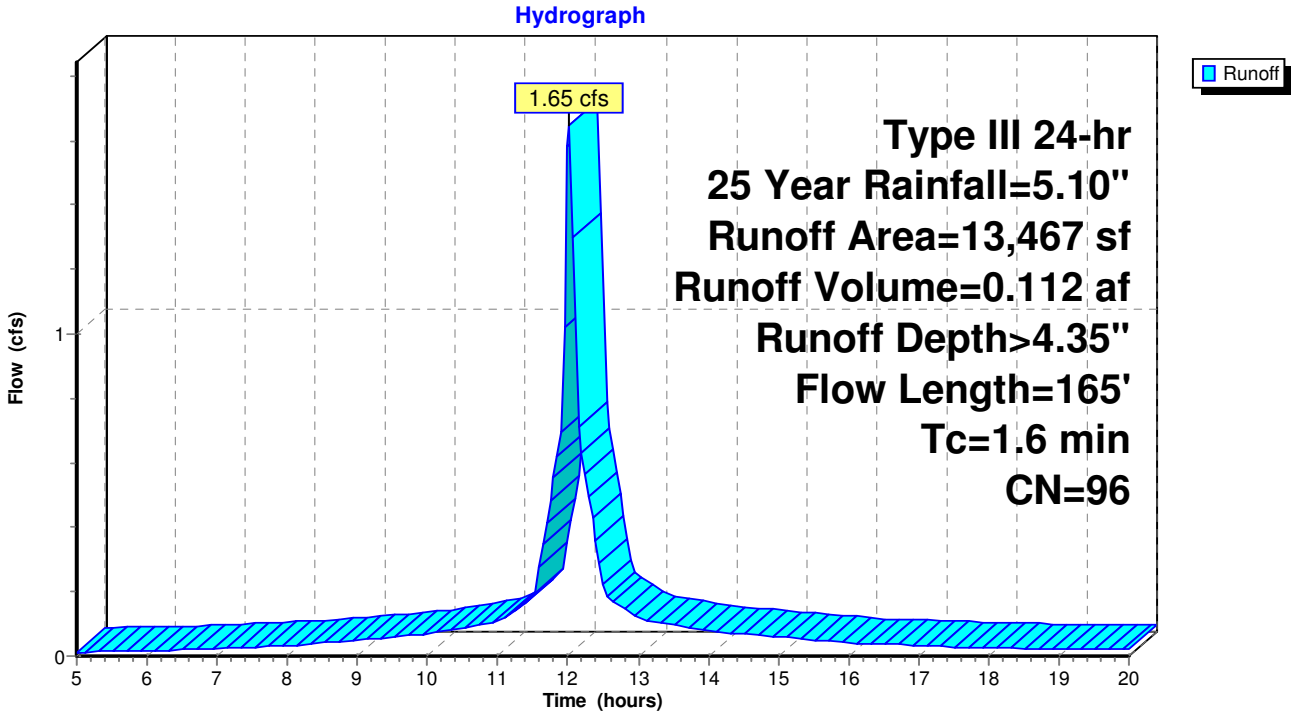

Summary for Subcatchment 10S: Subarea 10

Runoff = 1.13 cfs @ 12.03 hrs, Volume= 0.077 af, Depth> 4.43"

Runoff by SCS TR-20 method, UH=SCS, Weighted-CN, Time Span= 5.00-20.00 hrs, dt= 0.05 hrs
Type III 24-hr 25 Year Rainfall=5.10"

Area (sf)	CN	Description
8,624	98	Paved parking, HSG C
480	74	>75% Grass cover, Good, HSG C
9,104	97	Weighted Average
480		5.27% Pervious Area
8,624		94.73% Impervious Area

Tc (min)	Length (feet)	Slope (ft/ft)	Velocity (ft/sec)	Capacity (cfs)	Description
0.5	10	0.3000	0.31		**Sheet Flow,** Grass: Short n= 0.150 P2= 3.00"
1.1	140	0.0540	2.12		**Sheet Flow,** Smooth surfaces n= 0.011 P2= 3.00"
0.5	45	0.0056	1.52		**Shallow Concentrated Flow,** Paved Kv= 20.3 fps
2.1	195	Total			

Subcatchment 10S: Subarea 10

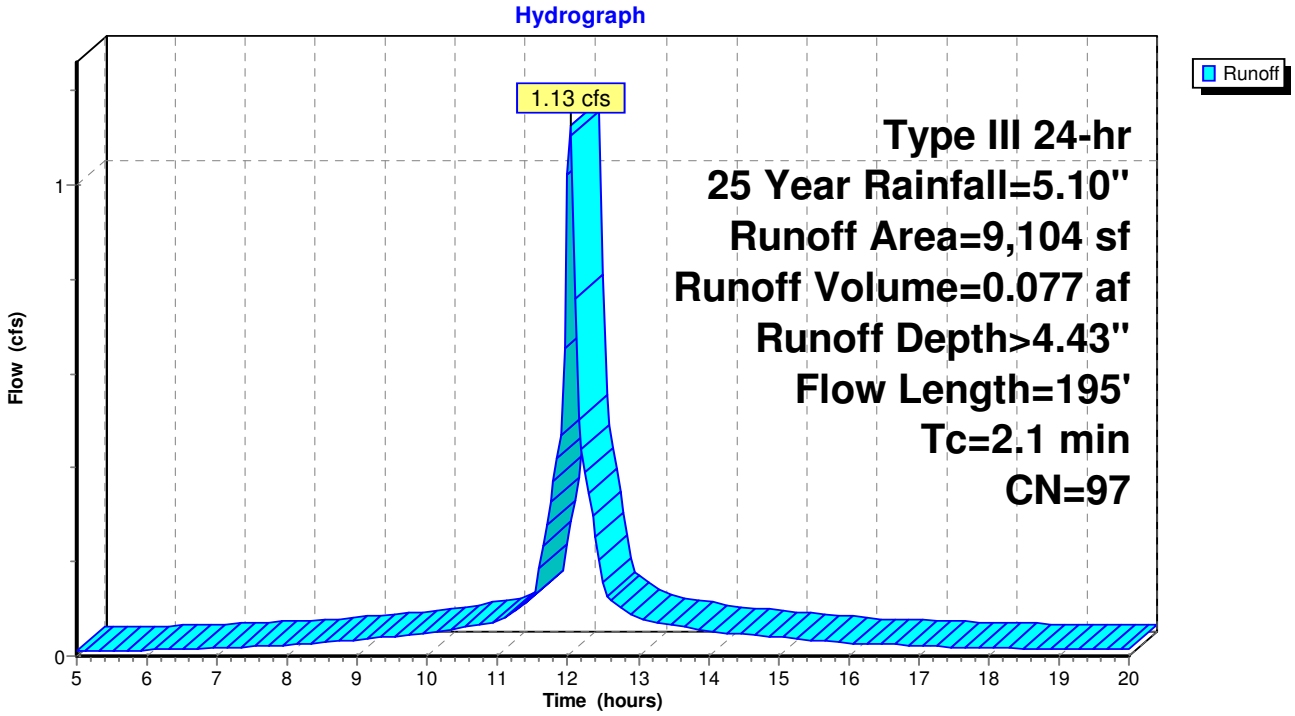

Summary for Subcatchment 11S: Subarea 11

Runoff = 3.33 cfs @ 12.01 hrs, Volume= 0.223 af, Depth> 4.51"

Runoff by SCS TR-20 method, UH=SCS, Weighted-CN, Time Span= 5.00-20.00 hrs, dt= 0.05 hrs
Type III 24-hr 25 Year Rainfall=5.10"

Area (sf)	CN	Description
25,812	98	Roofs, HSG C
25,812		100.00% Impervious Area

Tc (min)	Length (feet)	Slope (ft/ft)	Velocity (ft/sec)	Capacity (cfs)	Description
0.7	80	0.0500	1.84		**Sheet Flow,** Smooth surfaces n= 0.011 P2= 3.00"
0.1	110	0.2500	18.57	3.65	**Pipe Channel,** 6.0" Round Area= 0.2 sf Perim= 1.6' r= 0.13' n= 0.010 PVC, smooth interior
0.8	190	Total			

Subcatchment 11S: Subarea 11

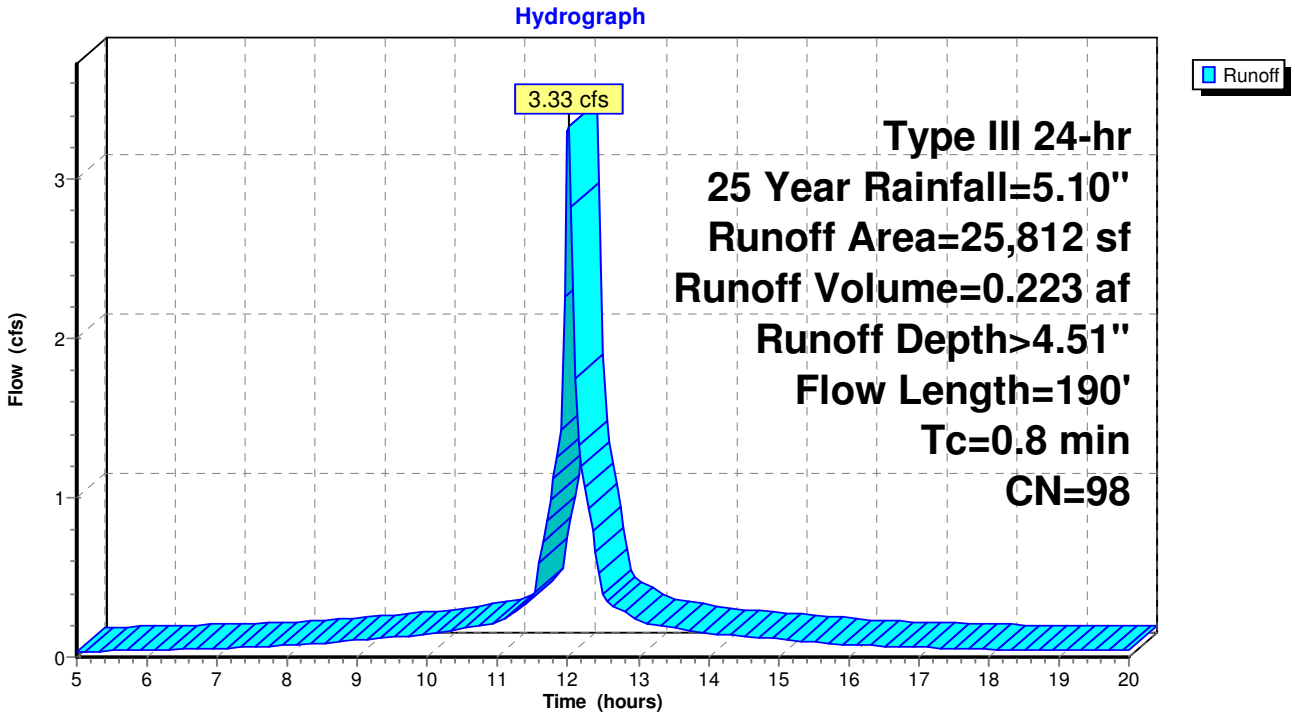

Summary for Subcatchment 12S: Subarea 12

Runoff = 10.72 cfs @ 12.03 hrs, Volume= 0.728 af, Depth> 4.35"

Runoff by SCS TR-20 method, UH=SCS, Weighted-CN, Time Span= 5.00-20.00 hrs, dt= 0.05 hrs
Type III 24-hr 25 Year Rainfall=5.10"

Area (sf)	CN	Description
78,848	98	Paved parking, HSG C
8,732	74	>75% Grass cover, Good, HSG C
87,580	96	Weighted Average
8,732		9.97% Pervious Area
78,848		90.03% Impervious Area

Tc (min)	Length (feet)	Slope (ft/ft)	Velocity (ft/sec)	Capacity (cfs)	Description
1.3	100	0.0170	1.25		**Sheet Flow,** Smooth surfaces n= 0.011 P2= 3.00"
0.6	110	0.0250	3.21		**Shallow Concentrated Flow,** Paved Kv= 20.3 fps
0.0	20	0.2500	7.50		**Shallow Concentrated Flow,** Grassed Waterway Kv= 15.0 fps
1.9	230	Total			

Subcatchment 12S: Subarea 12

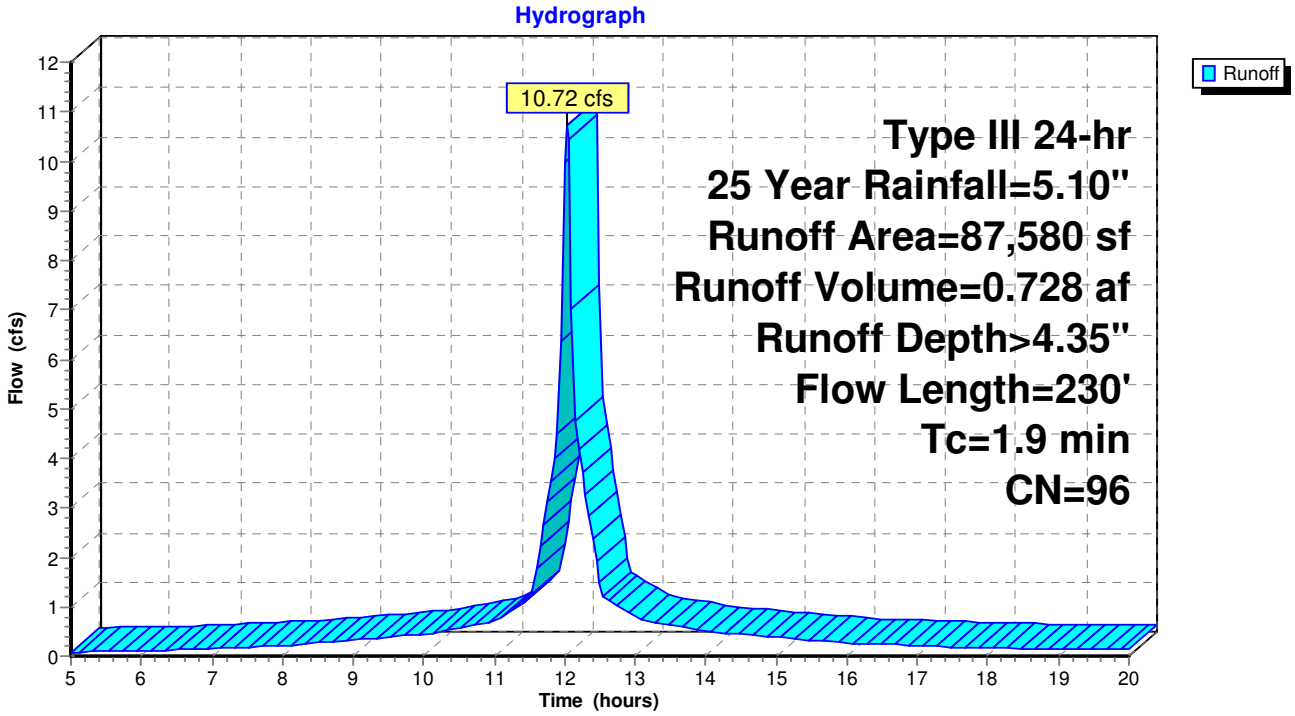

Summary for Reach 3R: Design Point

Inflow Area = 6.075 ac, 88.04% Impervious, Inflow Depth > 4.15" for 25 Year event
Inflow = 15.35 cfs @ 12.17 hrs, Volume= 2.101 af
Outflow = 15.36 cfs @ 12.17 hrs, Volume= 2.101 af, Atten= 0%, Lag= 0.0 min

Routing by Stor-Ind+Trans method, Time Span= 5.00-20.00 hrs, dt= 0.05 hrs
Max. Velocity= 12.38 fps, Min. Travel Time= 0.0 min
Avg. Velocity = 6.01 fps, Avg. Travel Time= 0.0 min

Peak Storage= 12 cf @ 12.17 hrs
Average Depth at Peak Storage= 0.83'
Bank-Full Depth= 2.00' Flow Area= 3.1 sf, Capacity= 42.45 cfs

24.0" Round Pipe
n= 0.012
Length= 10.0' Slope= 0.0300 '/'
Inlet Invert= 0.00', Outlet Invert= -0.30'

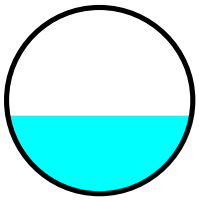

Reach 3R: Design Point

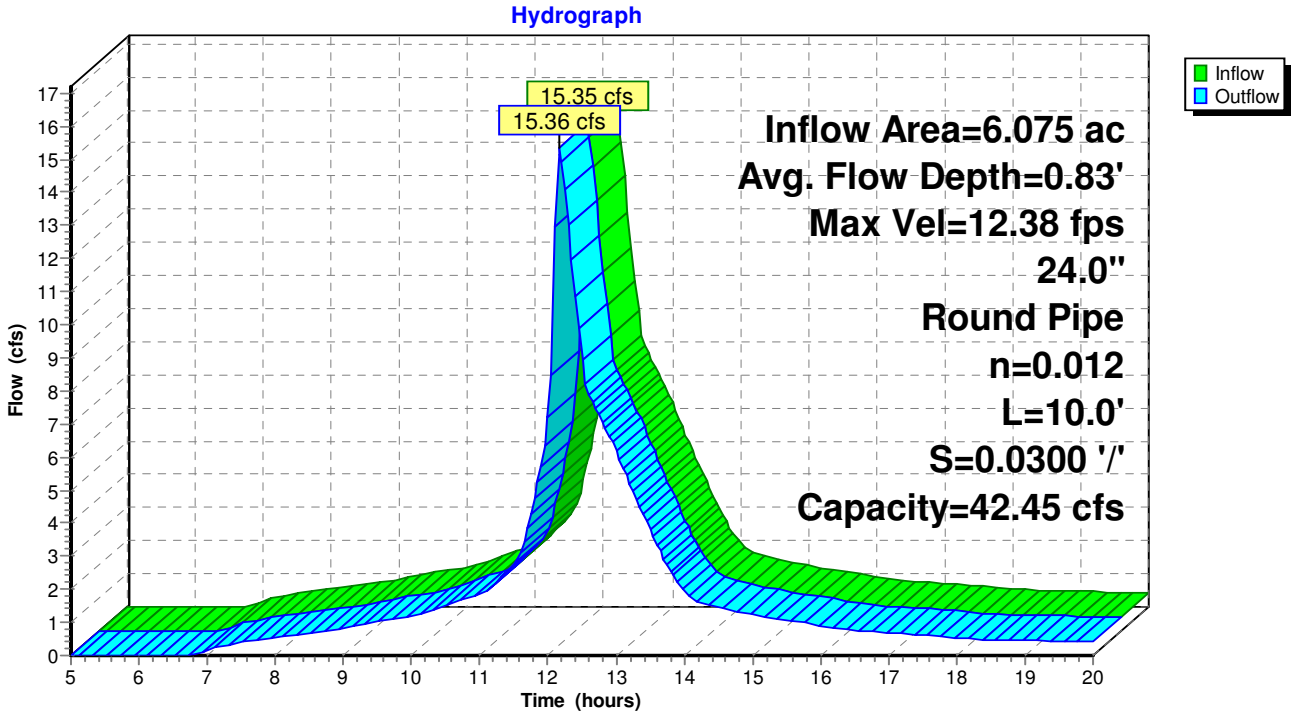

Summary for Pond 1P: Retention Pond

Inflow Area = 6.075 ac, 88.04% Impervious, Inflow Depth > 4.27" for 25 Year event
Inflow = 30.73 cfs @ 12.04 hrs, Volume= 2.159 af
Outflow = 15.35 cfs @ 12.17 hrs, Volume= 2.101 af, Atten= 50%, Lag= 7.8 min
Primary = 8.94 cfs @ 12.17 hrs, Volume= 1.959 af
Secondary = 6.41 cfs @ 12.17 hrs, Volume= 0.142 af

Routing by Stor-Ind method, Time Span= 5.00-20.00 hrs, dt= 0.05 hrs
Peak Elev= 291.70' @ 12.17 hrs Surf.Area= 6,792 sf Storage= 21,989 cf

Plug-Flow detention time= 38.6 min calculated for 2.093 af (97% of inflow)
Center-of-Mass det. time= 27.3 min (768.0 - 740.8)

Volume	Invert	Avail.Storage	Storage Description
#1	287.55'	23,975 cf	**Custom Stage Data (Prismatic)** Listed below

Elevation (feet)	Surf.Area (sq-ft)	Inc.Store (cubic-feet)	Cum.Store (cubic-feet)
287.55	3,883	0	0
288.00	4,172	1,812	1,812
289.00	4,817	4,495	6,307
290.00	5,494	5,156	11,462
291.00	6,255	5,875	17,337
292.00	7,022	6,639	23,975

Device	Routing	Invert	Outlet Devices
#1	Primary	288.00'	**24.0" W x 6.0" H Vert. Orifice/Grate** C= 0.600
#2	Secondary	291.00'	**3.0' long Sharp-Crested Rectangular Weir** 2 End Contraction(s) 0.5' Crest Height

Primary OutFlow Max=8.92 cfs @ 12.17 hrs HW=291.68' (Free Discharge)
└**1=Orifice/Grate** (Orifice Controls 8.92 cfs @ 8.92 fps)

Secondary OutFlow Max=6.14 cfs @ 12.17 hrs HW=291.68' (Free Discharge)
└**2=Sharp-Crested Rectangular Weir** (Weir Controls 6.14 cfs @ 3.15 fps)

Pond 1P: Retention Pond

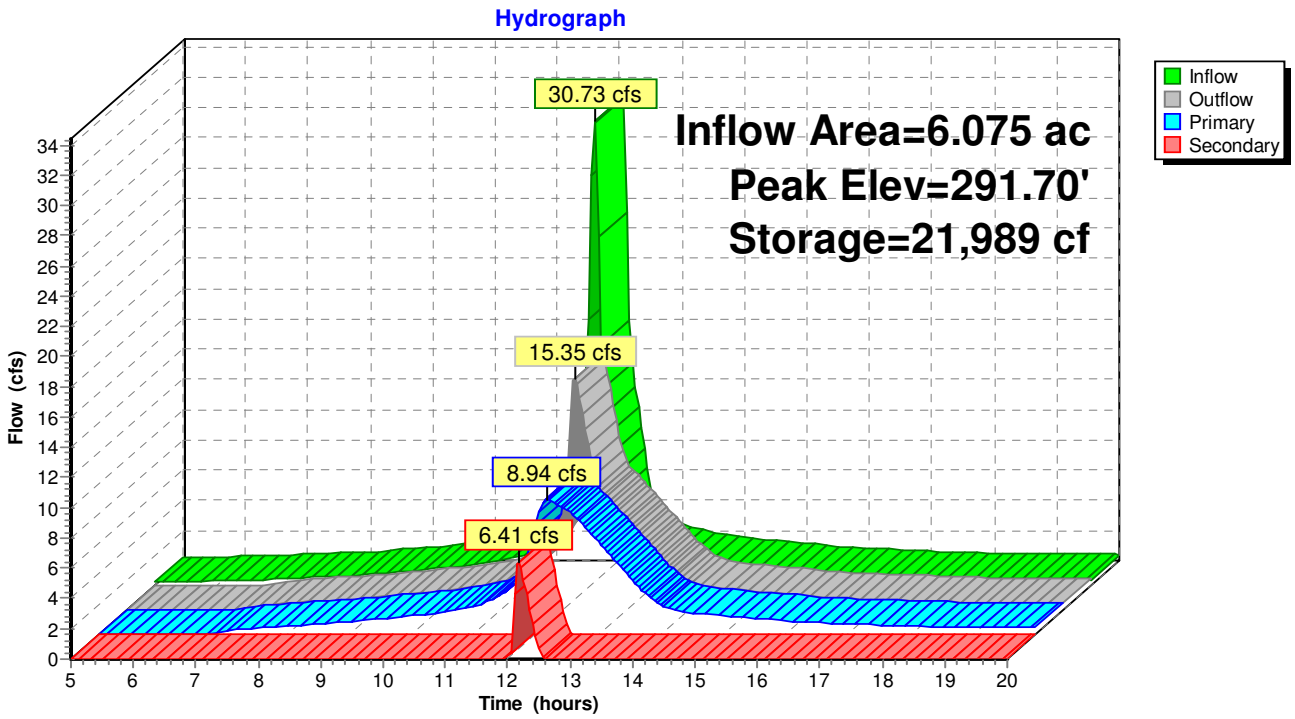

Summary for Pond 1Pz: Detention/Retention Pond Sizing

Volume	Invert	Avail.Storage	Storage Description
#1	281.00'	37,418 cf	**Custom Stage Data (Prismatic)** Listed below (Recalc)

Elevation (feet)	Surf.Area (sq-ft)	Inc.Store (cubic-feet)	Cum.Store (cubic-feet)
281.00	472	0	0
282.00	880	676	676
283.00	1,352	1,116	1,792
284.00	1,846	1,599	3,391
285.00	2,373	2,110	5,501
286.00	2,938	2,656	8,156
287.00	3,544	3,241	11,397
288.00	4,172	3,858	15,255
289.00	4,817	4,495	19,750
290.00	5,494	5,156	24,905
291.00	6,255	5,875	30,780
292.00	7,022	6,639	37,418

Summary for Pond 8P: CB8

Inflow Area = 2.265 ac, 79.55% Impervious, Inflow Depth > 4.05" for 25 Year event
Inflow = 11.21 cfs @ 12.05 hrs, Volume= 0.764 af
Outflow = 11.21 cfs @ 12.05 hrs, Volume= 0.764 af, Atten= 0%, Lag= 0.0 min
Primary = 11.21 cfs @ 12.05 hrs, Volume= 0.764 af

Routing by Stor-Ind method, Time Span= 5.00-20.00 hrs, dt= 0.05 hrs
Peak Elev= 299.45' @ 12.05 hrs

Device	Routing	Invert	Outlet Devices
#1	Primary	295.92'	**18.0" Round Culvert** L= 72.0' CPP, projecting, no headwall, Ke= 0.900 Inlet / Outlet Invert= 295.92' / 295.56' S= 0.0050 '/' Cc= 0.900 n= 0.013 Corrugated PE, smooth interior, Flow Area= 1.77 sf

Primary OutFlow Max=11.10 cfs @ 12.05 hrs HW=299.40' (Free Discharge)
└**1=Culvert** (Inlet Controls 11.10 cfs @ 6.28 fps)

Pond 8P: CB8

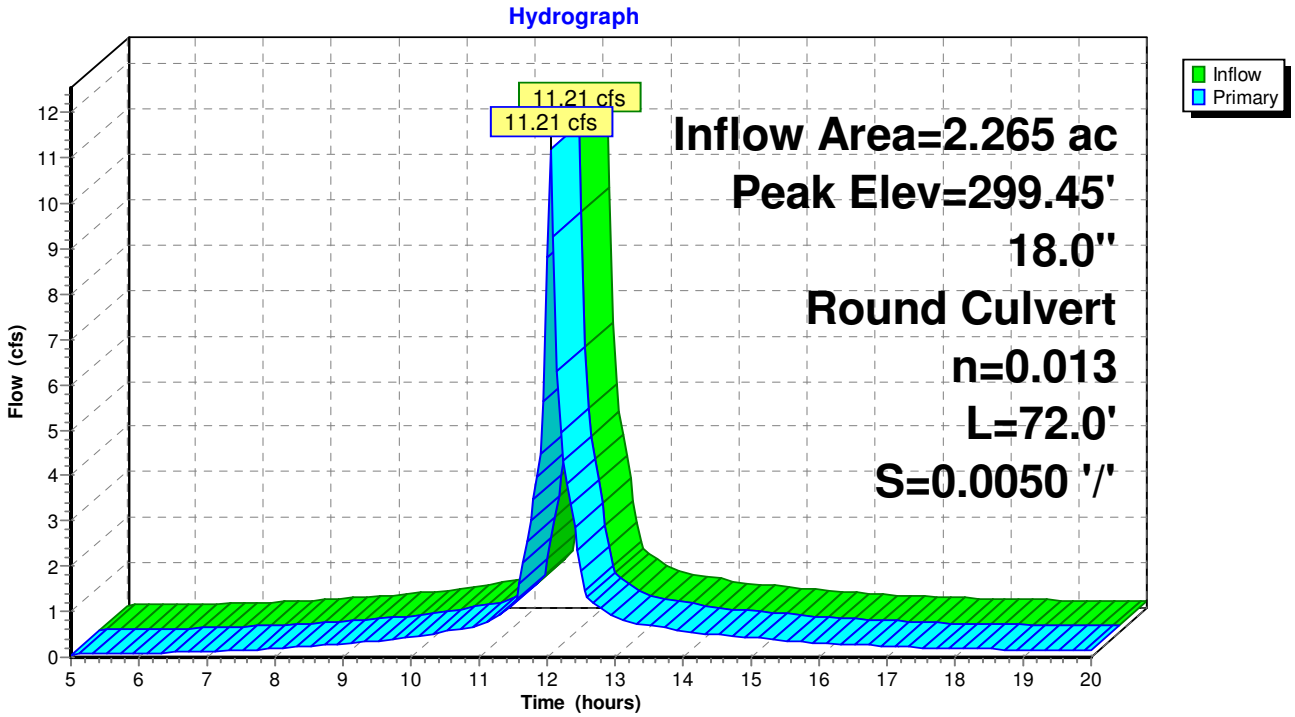

Summary for Pond CB1: CB1

Inflow Area =	0.336 ac, 59.71% Impervious, Inflow Depth > 3.55" for 25 Year event				
Inflow =	1.57 cfs @ 12.05 hrs, Volume=	0.099 af			
Outflow =	1.57 cfs @ 12.05 hrs, Volume=	0.099 af, Atten= 0%, Lag= 0.0 min			
Primary =	1.57 cfs @ 12.05 hrs, Volume=	0.099 af			

Routing by Stor-Ind method, Time Span= 5.00-20.00 hrs, dt= 0.05 hrs
Peak Elev= 299.51' @ 12.05 hrs

Device	Routing	Invert	Outlet Devices
#1	Primary	298.73'	**12.0" Round Culvert** L= 85.0' CPP, projecting, no headwall, Ke= 0.900 Inlet / Outlet Invert= 298.73' / 297.88' S= 0.0100 '/' Cc= 0.900 n= 0.013 Corrugated PE, smooth interior, Flow Area= 0.79 sf

Primary OutFlow Max=1.55 cfs @ 12.05 hrs HW=299.51' (Free Discharge)
└**1=Culvert** (Inlet Controls 1.55 cfs @ 2.37 fps)

Pond CB1: CB1

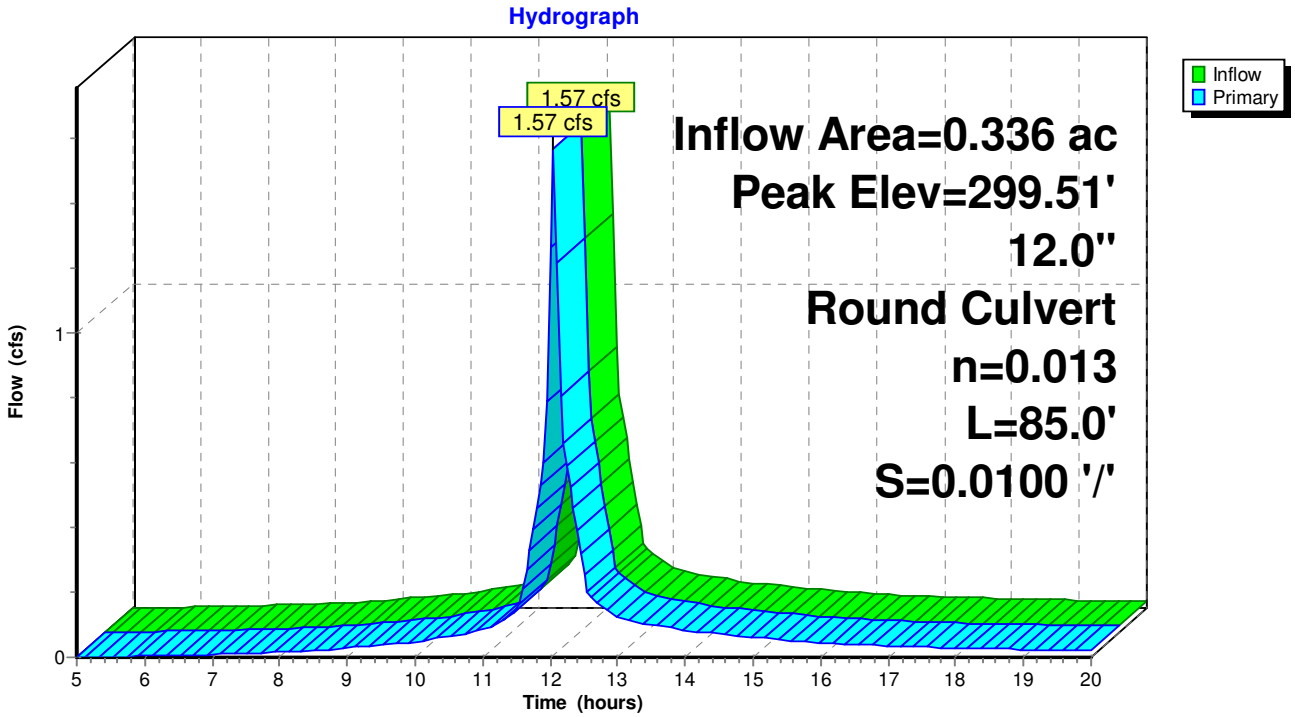

Summary for Pond CB10: CB10

Inflow Area = 3.375 ac, 85.26% Impervious, Inflow Depth > 4.18" for 25 Year event
Inflow = 16.78 cfs @ 12.04 hrs, Volume= 1.176 af
Outflow = 16.78 cfs @ 12.04 hrs, Volume= 1.176 af, Atten= 0%, Lag= 0.0 min
Primary = 16.78 cfs @ 12.04 hrs, Volume= 1.176 af

Routing by Stor-Ind method, Time Span= 5.00-20.00 hrs, dt= 0.05 hrs
Peak Elev= 301.90' @ 12.04 hrs

Device	Routing	Invert	Outlet Devices
#1	Primary	294.92'	**18.0" Round Culvert** L= 130.0' CPP, projecting, no headwall, Ke= 0.900 Inlet / Outlet Invert= 294.92' / 292.50' S= 0.0186 '/' Cc= 0.900 n= 0.013 Corrugated PE, smooth interior, Flow Area= 1.77 sf

Primary OutFlow Max=16.40 cfs @ 12.04 hrs HW=301.63' (Free Discharge)
└**1=Culvert** (Inlet Controls 16.40 cfs @ 9.28 fps)

Pond CB10: CB10

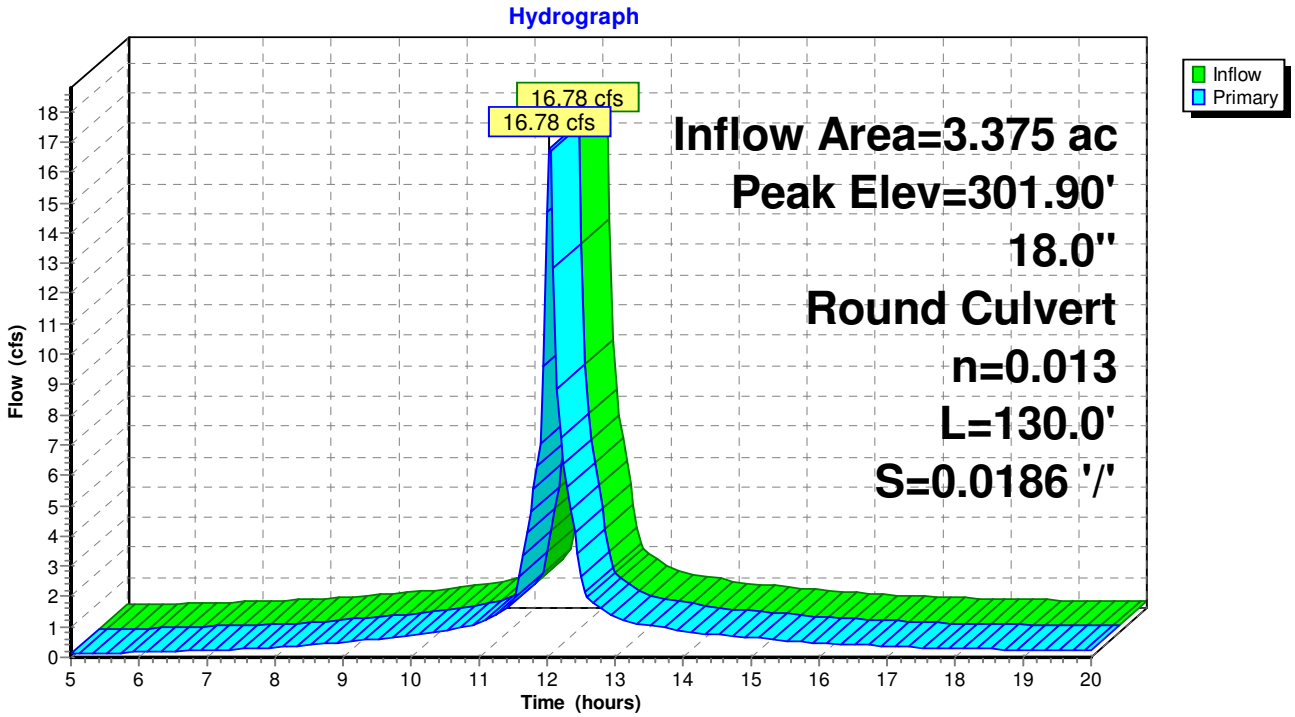

Summary for Pond CB11: CB11

Inflow Area =	0.689 ac, 95.85% Impervious, Inflow Depth > 4.43" for 25 Year event				
Inflow =	3.47 cfs @	12.07 hrs,	Volume=	0.254 af	
Outflow =	3.47 cfs @	12.07 hrs,	Volume=	0.254 af,	Atten= 0%, Lag= 0.0 min
Primary =	3.47 cfs @	12.07 hrs,	Volume=	0.254 af	

Routing by Stor-Ind method, Time Span= 5.00-20.00 hrs, dt= 0.05 hrs
Peak Elev= 294.61' @ 12.07 hrs

Device	Routing	Invert	Outlet Devices
#1	Primary	293.59'	**18.0" Round Culvert** L= 230.0' CPP, projecting, no headwall, Ke= 0.900 Inlet / Outlet Invert= 293.59' / 288.85' S= 0.0206 '/' Cc= 0.900 n= 0.013 Corrugated PE, smooth interior, Flow Area= 1.77 sf

Primary OutFlow Max=3.34 cfs @ 12.07 hrs HW=294.59' (Free Discharge)
└**1=Culvert** (Inlet Controls 3.34 cfs @ 2.68 fps)

Pond CB11: CB11

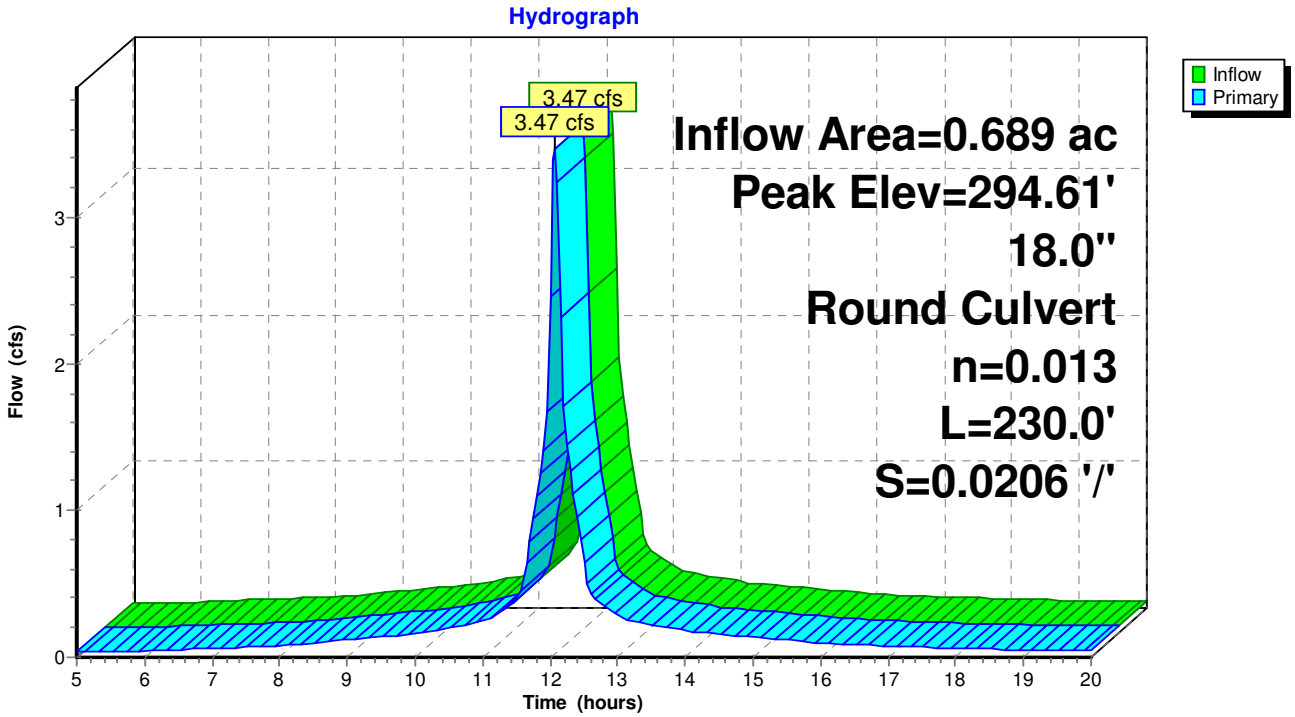

Summary for Pond CB2: CB2

Inflow Area =	1.427 ac, 70.09% Impervious, Inflow Depth > 3.84" for 25 Year event				
Inflow =	6.83 cfs @ 12.06 hrs, Volume=	0.457 af			
Outflow =	6.83 cfs @ 12.06 hrs, Volume=	0.457 af, Atten= 0%, Lag= 0.0 min			
Primary =	6.83 cfs @ 12.06 hrs, Volume=	0.457 af			

Routing by Stor-Ind method, Time Span= 5.00-20.00 hrs, dt= 0.05 hrs
Peak Elev= 298.58' @ 12.06 hrs

Device	Routing	Invert	Outlet Devices
#1	Primary	296.80'	**18.0" Round Culvert** L= 40.0' CPP, projecting, no headwall, Ke= 0.900 Inlet / Outlet Invert= 296.80' / 296.00' S= 0.0200 '/' Cc= 0.900 n= 0.013 Corrugated PE, smooth interior, Flow Area= 1.77 sf

Primary OutFlow Max=6.70 cfs @ 12.06 hrs HW=298.54' (Free Discharge)
└**1=Culvert** (Inlet Controls 6.70 cfs @ 3.79 fps)

Pond CB2: CB2

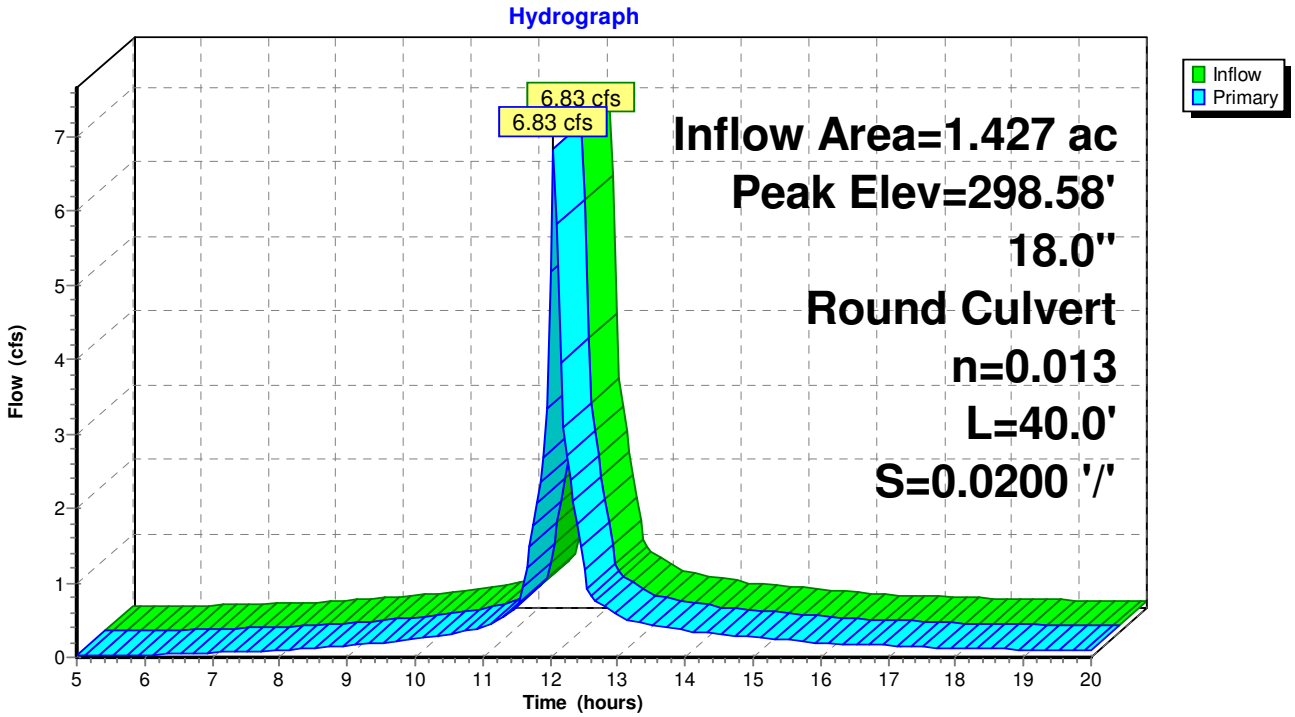

Summary for Pond CB3: CB3

Inflow Area =	0.779 ac, 72.51% Impervious, Inflow Depth > 3.91" for 25 Year event				
Inflow =	3.77 cfs @	12.06 hrs,	Volume=	0.254 af	
Outflow =	3.77 cfs @	12.06 hrs,	Volume=	0.254 af,	Atten= 0%, Lag= 0.0 min
Primary =	3.77 cfs @	12.06 hrs,	Volume=	0.254 af	

Routing by Stor-Ind method, Time Span= 5.00-20.00 hrs, dt= 0.05 hrs
Peak Elev= 298.81' @ 12.06 hrs

Device	Routing	Invert	Outlet Devices
#1	Primary	297.53'	**15.0" Round Culvert** L= 65.0' CPP, projecting, no headwall, Ke= 0.900 Inlet / Outlet Invert= 297.53' / 296.88' S= 0.0100 '/' Cc= 0.900 n= 0.013 Corrugated PE, smooth interior, Flow Area= 1.23 sf

Primary OutFlow Max=3.68 cfs @ 12.06 hrs HW=298.78' (Free Discharge)
└**1=Culvert** (Inlet Controls 3.68 cfs @ 3.00 fps)

Pond CB3: CB3

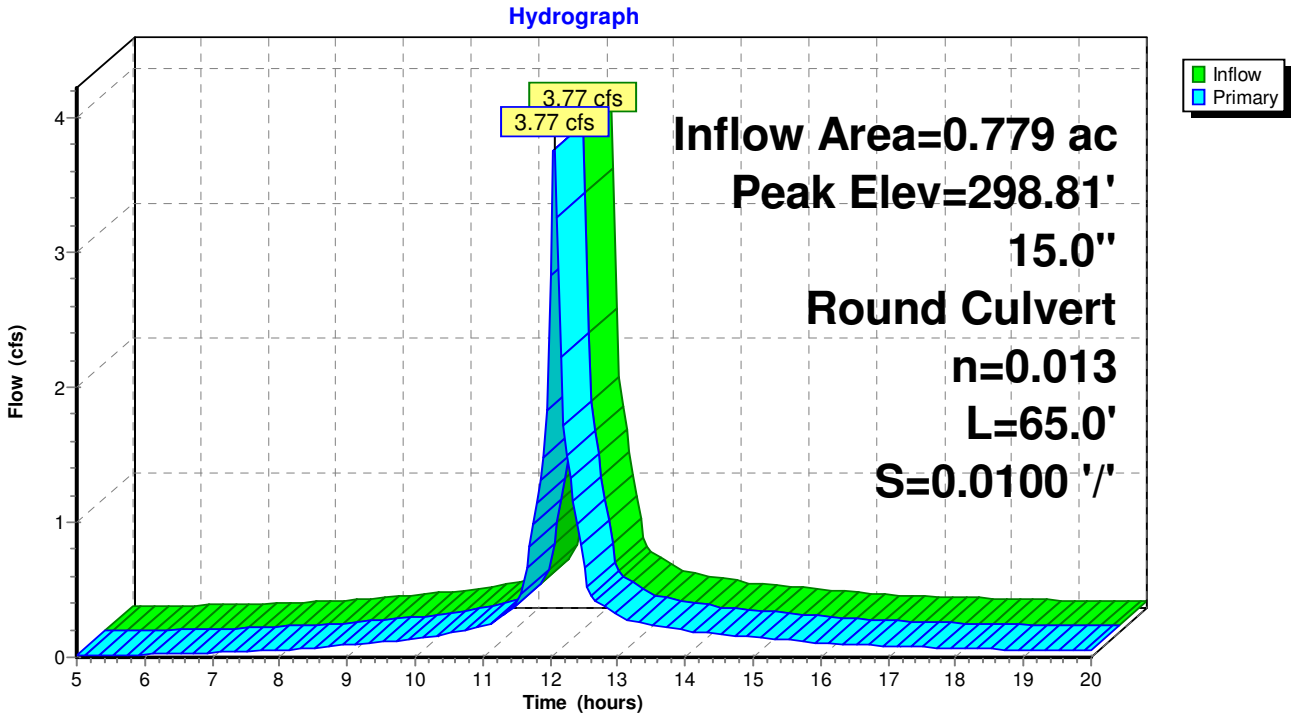

Summary for Pond CB4: CB4

Inflow Area =	0.505 ac, 75.28% Impervious, Inflow Depth > 4.00" for 25 Year event				
Inflow =	2.49 cfs @	12.06 hrs,	Volume=	0.168 af	
Outflow =	2.49 cfs @	12.06 hrs,	Volume=	0.168 af,	Atten= 0%, Lag= 0.0 min
Primary =	2.49 cfs @	12.06 hrs,	Volume=	0.168 af	

Routing by Stor-Ind method, Time Span= 5.00-20.00 hrs, dt= 0.05 hrs
Peak Elev= 299.76' @ 12.06 hrs

Device	Routing	Invert	Outlet Devices
#1	Primary	298.57'	**12.0" Round Culvert** L= 96.0' CPP, projecting, no headwall, Ke= 0.900 Inlet / Outlet Invert= 298.57' / 297.61' S= 0.0100 '/' Cc= 0.900 n= 0.013 Corrugated PE, smooth interior, Flow Area= 0.79 sf

Primary OutFlow Max=2.44 cfs @ 12.06 hrs HW=299.74' (Free Discharge)
└**1=Culvert** (Inlet Controls 2.44 cfs @ 3.11 fps)

Pond CB4: CB4

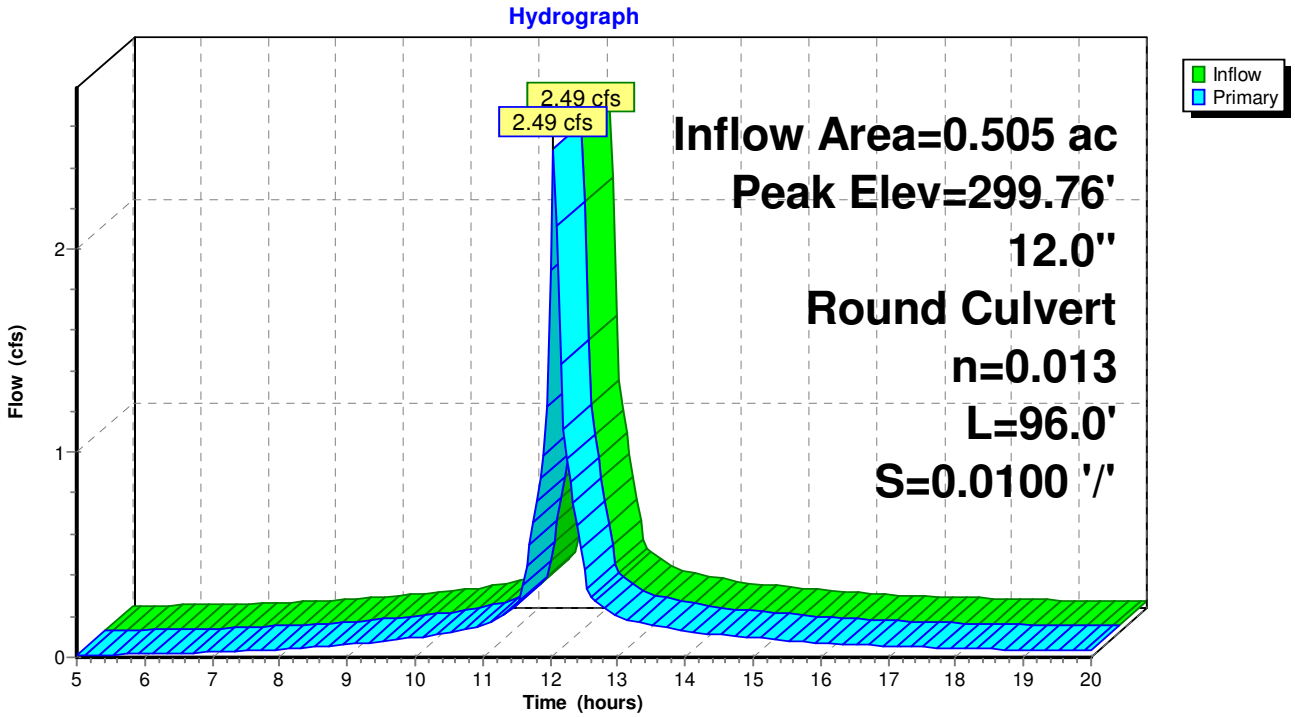

Summary for Pond CB5: CB5

Inflow Area =	0.201 ac, 78.10% Impervious, Inflow Depth > 4.06" for 25 Year event				
Inflow =	1.03 cfs @ 12.05 hrs, Volume=	0.068 af			
Outflow =	1.03 cfs @ 12.05 hrs, Volume=	0.068 af, Atten= 0%, Lag= 0.0 min			
Primary =	1.03 cfs @ 12.05 hrs, Volume=	0.068 af			

Routing by Stor-Ind method, Time Span= 5.00-20.00 hrs, dt= 0.05 hrs
Peak Elev= 300.01' @ 12.05 hrs

Device	Routing	Invert	Outlet Devices
#1	Primary	299.41'	**12.0" Round Culvert** L= 76.0' CPP, projecting, no headwall, Ke= 0.900 Inlet / Outlet Invert= 299.41' / 298.65' S= 0.0100 '/' Cc= 0.900 n= 0.013 Corrugated PE, smooth interior, Flow Area= 0.79 sf

Primary OutFlow Max=1.02 cfs @ 12.05 hrs HW=300.01' (Free Discharge)
└**1=Culvert** (Inlet Controls 1.02 cfs @ 2.08 fps)

Pond CB5: CB5

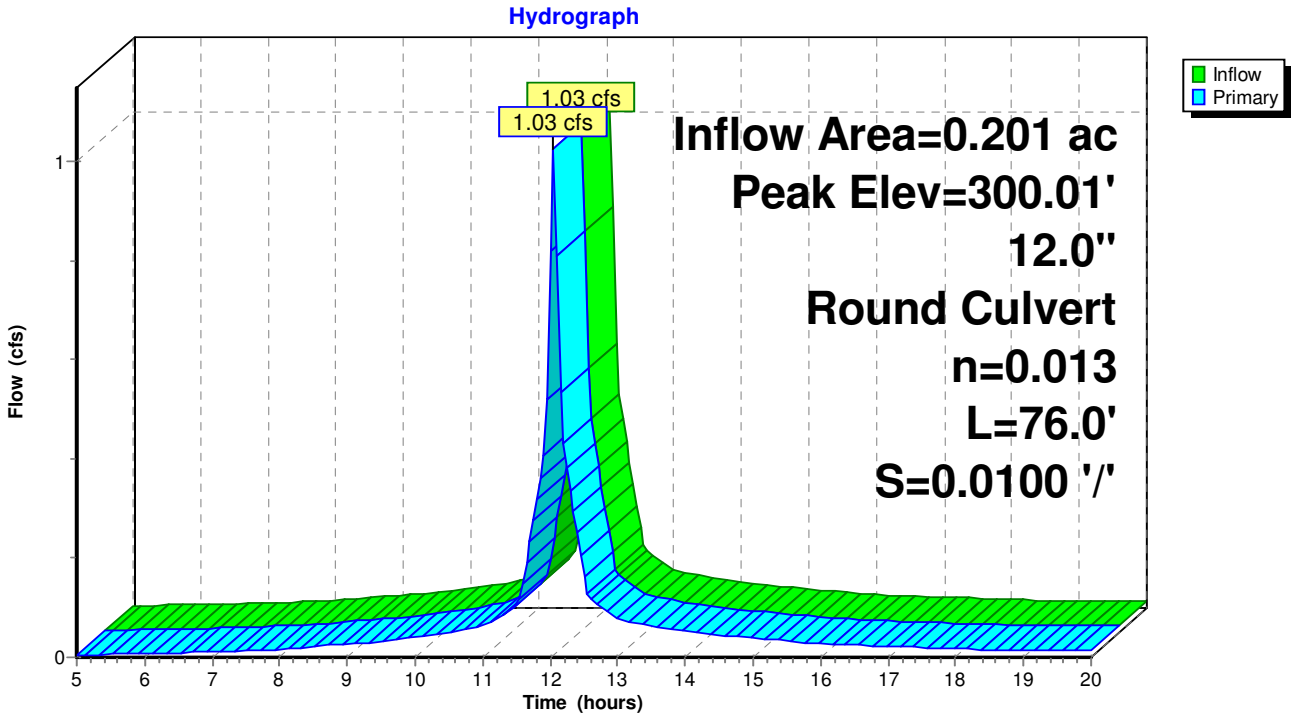

Summary for Pond CB6: CB6

Inflow Area =	0.596 ac, 96.67% Impervious, Inflow Depth > 4.43" for 25 Year event				
Inflow =	3.13 cfs @	12.05 hrs,	Volume=	0.220 af	
Outflow =	3.13 cfs @	12.05 hrs,	Volume=	0.220 af,	Atten= 0%, Lag= 0.0 min
Primary =	3.13 cfs @	12.05 hrs,	Volume=	0.220 af	

Routing by Stor-Ind method, Time Span= 5.00-20.00 hrs, dt= 0.05 hrs
Peak Elev= 297.48' @ 12.05 hrs

Device	Routing	Invert	Outlet Devices
#1	Primary	296.35'	**15.0" Round Culvert** L= 70.0' CPP, projecting, no headwall, Ke= 0.900 Inlet / Outlet Invert= 296.35' / 296.00' S= 0.0050 '/' Cc= 0.900 n= 0.013 Corrugated PE, smooth interior, Flow Area= 1.23 sf

Primary OutFlow Max=3.09 cfs @ 12.05 hrs HW=297.46' (Free Discharge)
└**1=Culvert** (Barrel Controls 3.09 cfs @ 3.54 fps)

Pond CB6: CB6

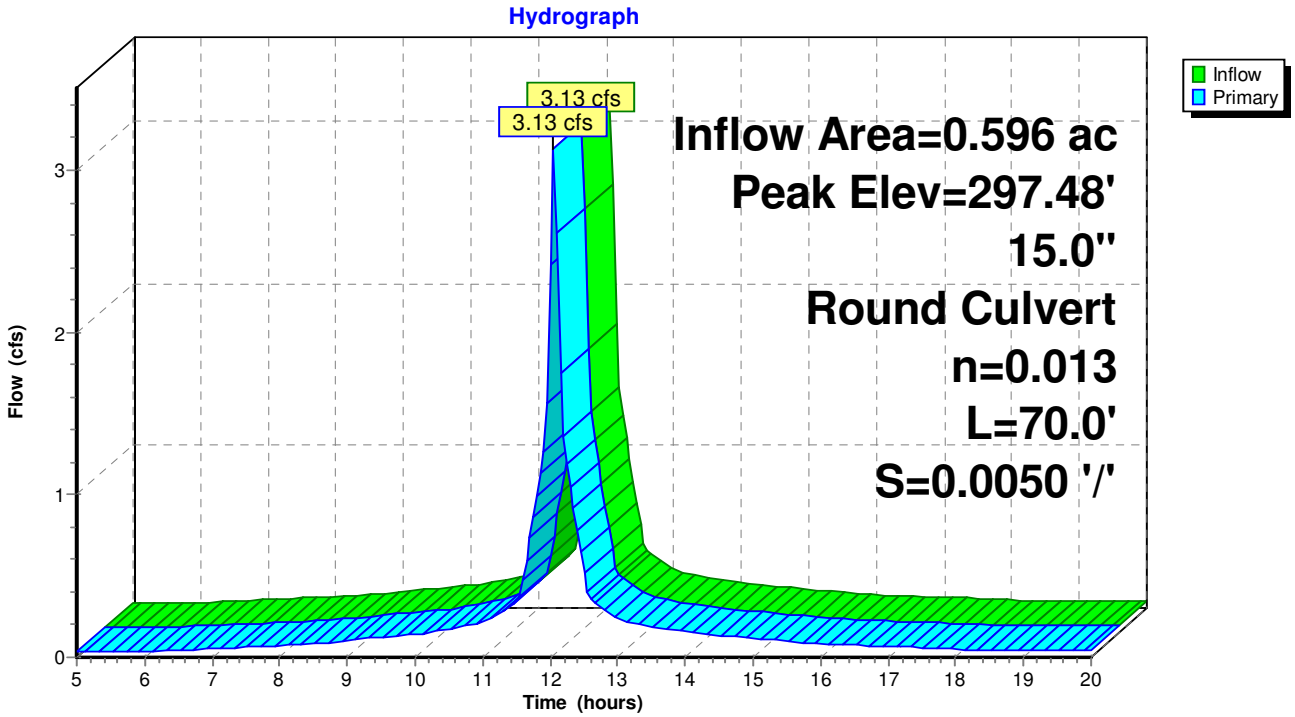

Summary for Pond CB7: CB7

Inflow Area =	0.689 ac, 95.85% Impervious, Inflow Depth > 4.43" for 25 Year event				
Inflow =	3.47 cfs @	12.07 hrs,	Volume=	0.254 af	
Outflow =	3.47 cfs @	12.07 hrs,	Volume=	0.254 af,	Atten= 0%, Lag= 0.0 min
Primary =	3.47 cfs @	12.07 hrs,	Volume=	0.254 af	

Routing by Stor-Ind method, Time Span= 5.00-20.00 hrs, dt= 0.05 hrs
Peak Elev= 296.05' @ 12.07 hrs

Device	Routing	Invert	Outlet Devices
#1	Primary	294.89'	**15.0" Round Culvert** L= 165.0' CPP, projecting, no headwall, Ke= 0.900 Inlet / Outlet Invert= 294.89' / 293.45' S= 0.0087 '/' Cc= 0.900 n= 0.013 Corrugated PE, smooth interior, Flow Area= 1.23 sf

Primary OutFlow Max=3.34 cfs @ 12.07 hrs HW=296.02' (Free Discharge)
└**1=Culvert** (Inlet Controls 3.34 cfs @ 2.86 fps)

Pond CB7: CB7

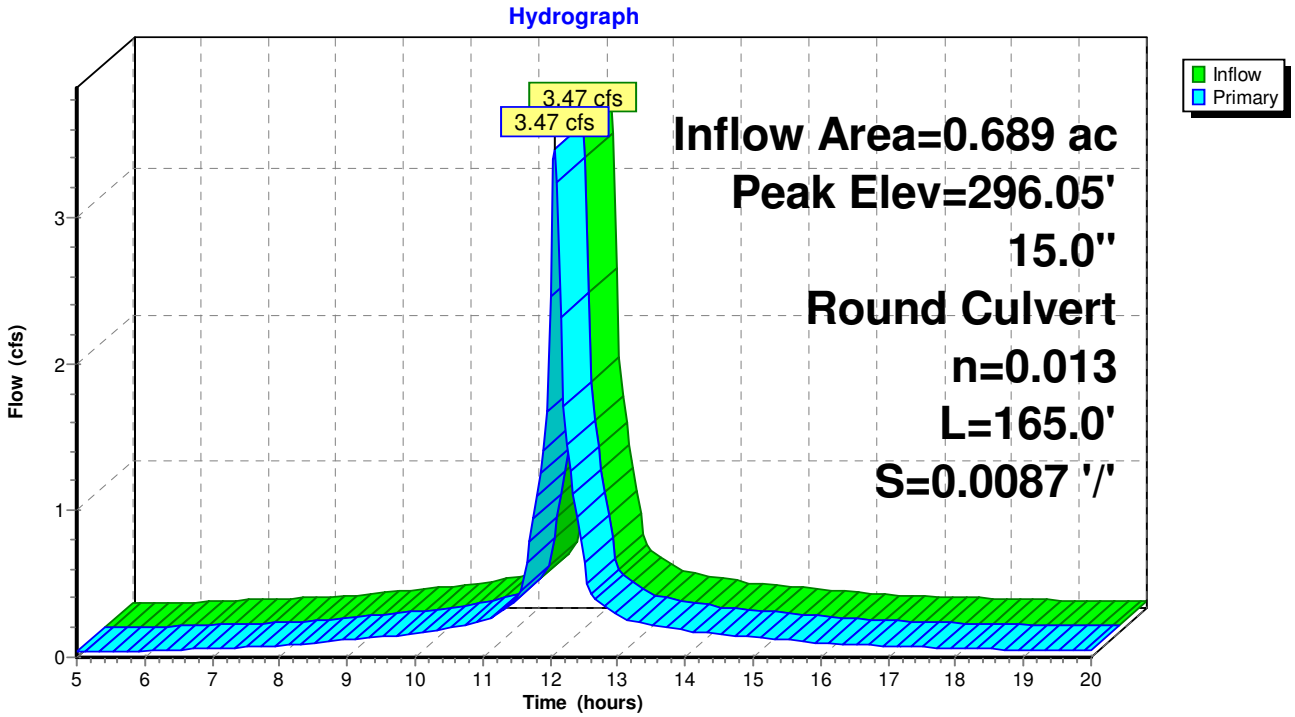

Summary for Pond CB9: CB9

Inflow Area =	2.574 ac, 81.10% Impervious, Inflow Depth > 4.09" for 25 Year event				
Inflow =	12.78 cfs @	12.05 hrs,	Volume=	0.876 af	
Outflow =	12.78 cfs @	12.05 hrs,	Volume=	0.876 af,	Atten= 0%, Lag= 0.0 min
Primary =	12.78 cfs @	12.05 hrs,	Volume=	0.876 af	

Routing by Stor-Ind method, Time Span= 5.00-20.00 hrs, dt= 0.05 hrs
Peak Elev= 299.85' @ 12.05 hrs

Device	Routing	Invert	Outlet Devices
#1	Primary	295.48'	**18.0" Round Culvert** L= 95.0' CPP, projecting, no headwall, Ke= 0.900 Inlet / Outlet Invert= 295.48' / 295.00' S= 0.0051 '/' Cc= 0.900 n= 0.013 Corrugated PE, smooth interior, Flow Area= 1.77 sf

Primary OutFlow Max=12.76 cfs @ 12.05 hrs HW=299.84' (Free Discharge)
└**1=Culvert** (Inlet Controls 12.76 cfs @ 7.22 fps)

Pond CB9: CB9

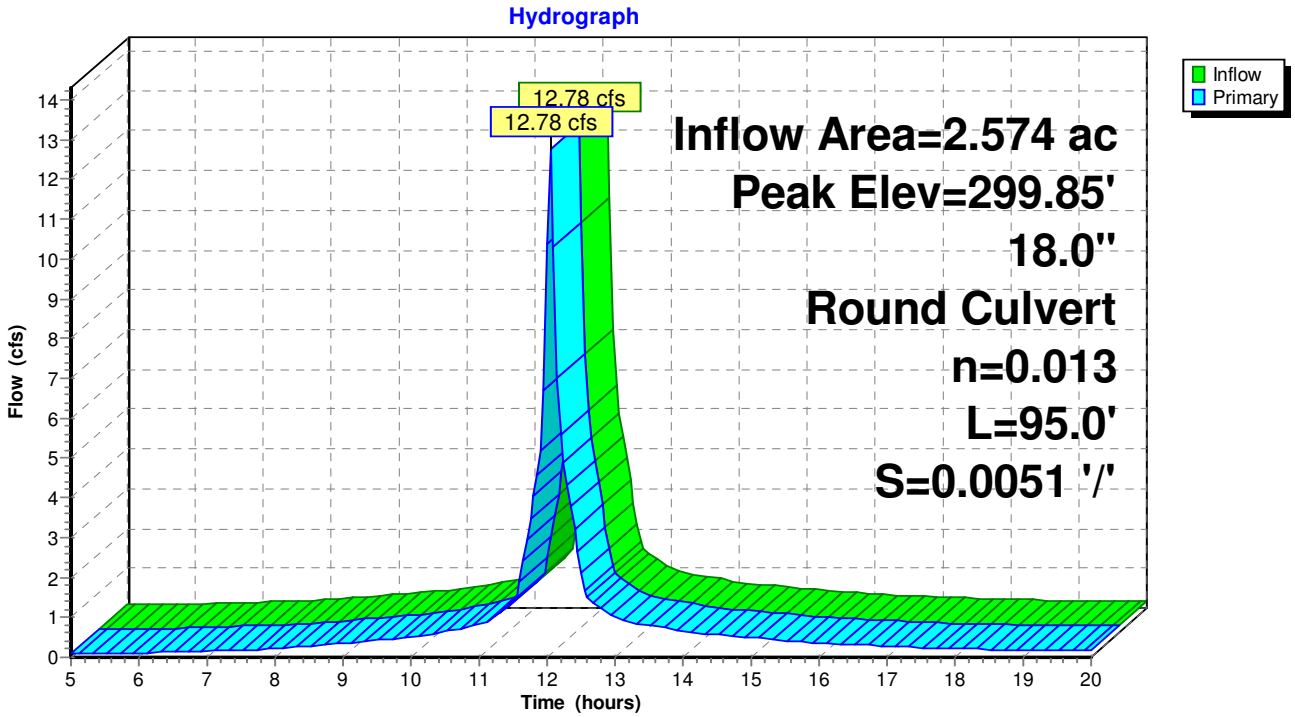

POST DEVELOPMENT HYDROLOGY PLAN
STORMWATER DETAILS AND NOTES

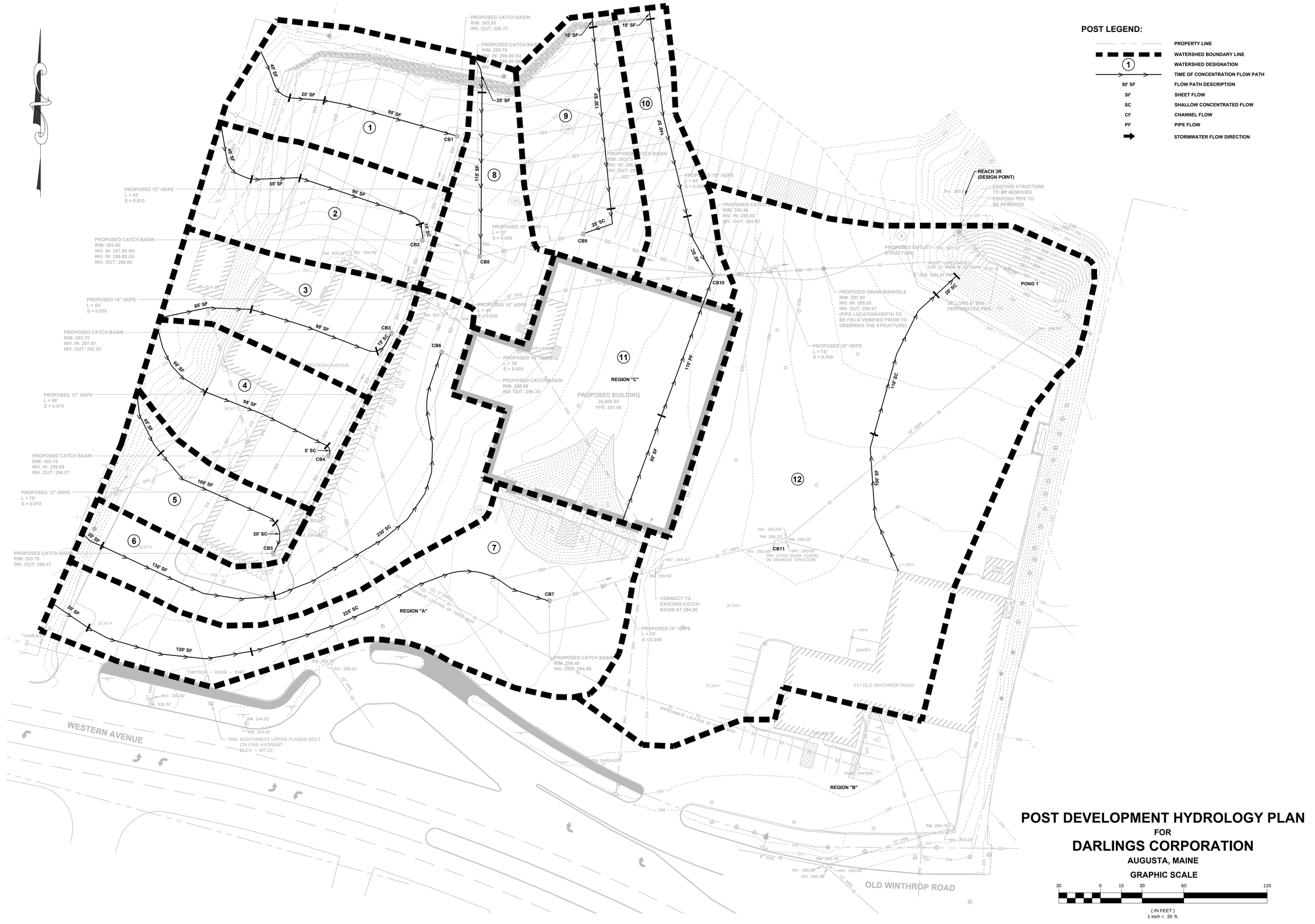

POST DEVELOPMENT HYDROLOGY PLAN
FOR
DARLINGS CORPORATION
AUGUSTA, MAINE

GRAPHIC SCALE

30 0 15 30 60 120

(IN FEET)
1 inch = 30 ft.

Brewer
Pickering Main Street
PO Box 639
Brewer, ME
T: 207-989-4824
F: 207-989-4881

Presque Isle
44 Main Street
PO Box 827
Presque Isle, ME
T: 207-764-8412
F: 207-764-8414

Waterville
44 Main Street
Suite 204
Waterville, ME
T: 207-680-2202
F: 207-680-2204

Bar Harbor
1386 State Hwy
P.O. Box 1102
Bar Harbor, ME
T: 207-288-9087
F: 207-288-0588

Machias
P.O. Box 87
Machias, ME
T: 207-255-8270
F: 207-255-8367

Lewiston
640 Main Street
Lewiston, ME
T: 207-795-6009
F: 207-795-6118

CES INC
Engineers • Environmental Scientists • Surveyors

PROJECT TITLE
DARLINGS CORPORATION
AUGUSTA, MAINE

SHEET TITLE
POST DEVELOPMENT HYDROLOGY PLAN

REV.	DESCRIPTION	DATE	DRAWN BY	CHECKED BY
R2				
R3				
R4				
R5				
R6				
R7				

STATE OF MAINE
CHRISTOPHER T. MICHAUD
No. 12674
06/26/2015
LICENSED
PROFESSIONAL ENGINEER

SCALE	1"=30'
DATE	2015-06-23
DRAWN BY	WAB
CHECKED BY	CTM
DESIGNED BY	
APPROVED BY	
JOB NUMBER	105780.005
DRAWING NUMBER	C701

J:\105780-DARLINGS_CORPORATION\AUGUSTA SITE DEVELOPMENT\SITECD\CAD_DRAWINGS\CIVIL\DESIGN_DWGS\105780-C-C-01.DWG, 6/26/2015 12:57 PM

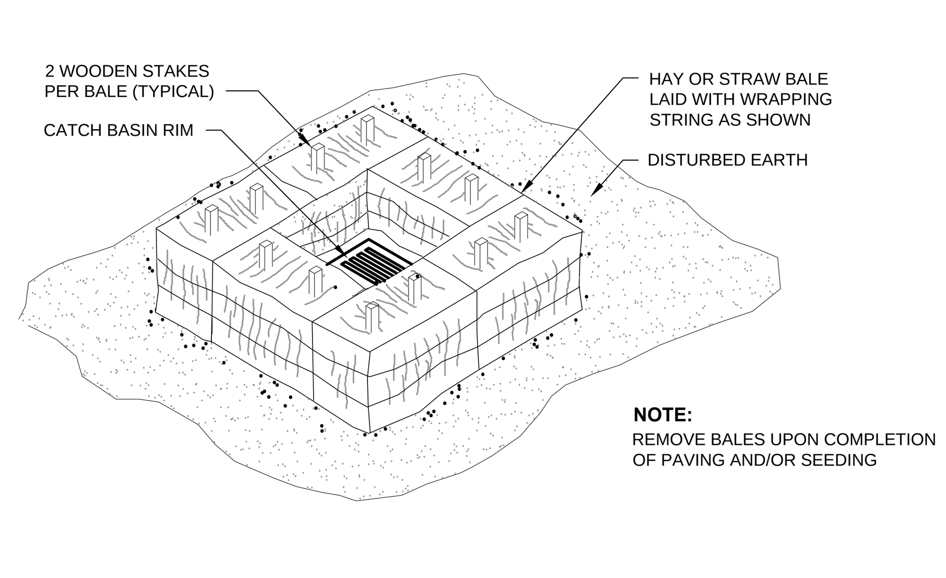

NOTE:
REMOVE BALES UPON COMPLETION OF PAVING AND/OR SEEDING

LOW POINT SEDIMENTATION CONTROL BARRIER DETAIL

N.T.S.

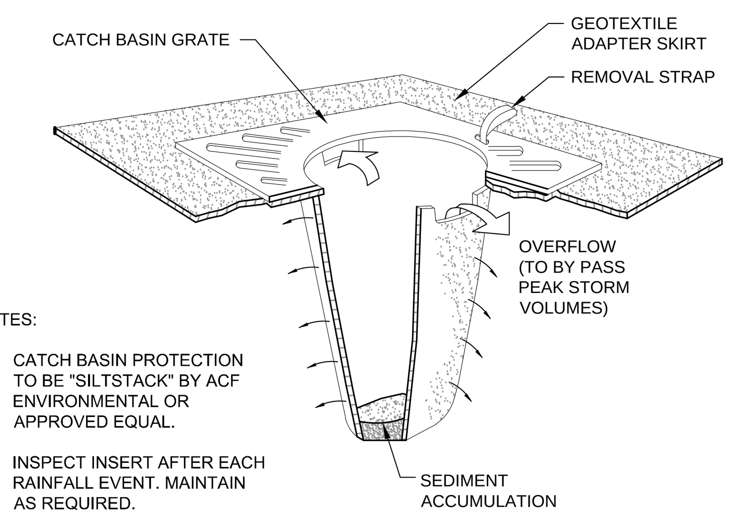

NOTES:

1. CATCH BASIN PROTECTION TO BE "SILTSTACK" BY ACF ENVIRONMENTAL OR APPROVED EQUAL.
2. INSPECT INSERT AFTER EACH RAINFALL EVENT. MAINTAIN AS REQUIRED.
3. SEDIMENT WITHIN INSERT SHALL BE EMPTIED WHEN 1/2 FULL.

SEDIMENT SACK INLET PROTECTION DETAIL

N.T.S. (MAY BE USED AS AN ALTERNATE TO HAY BALES)

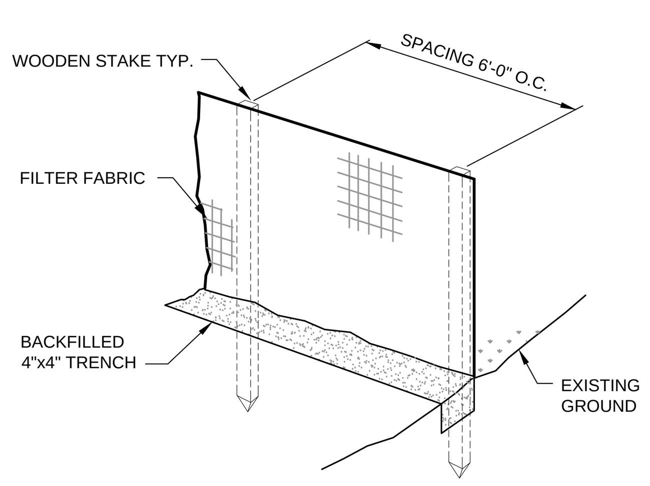

NOTES:

1. KEY FABRIC IN A 4"x4" TRENCH W/BACKFILL.
2. SILT FENCE SHALL BE A 3' FENCE WITH A MINIMUM GRAB STRENGTH OF 120 LBS.

SILT FENCE DETAIL

N.T.S.

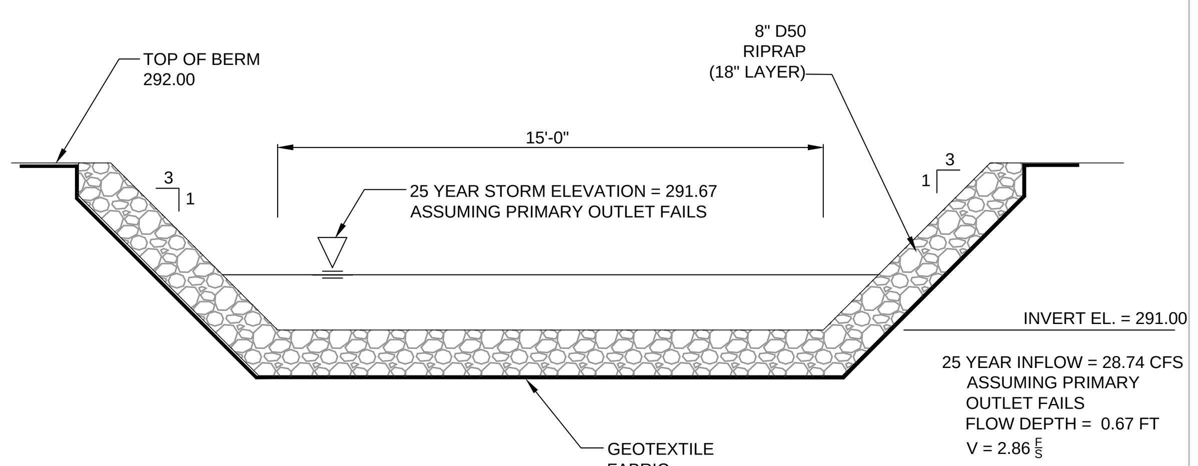

WET POND EMERGENCY SPILLWAY DETAIL

N.T.S.

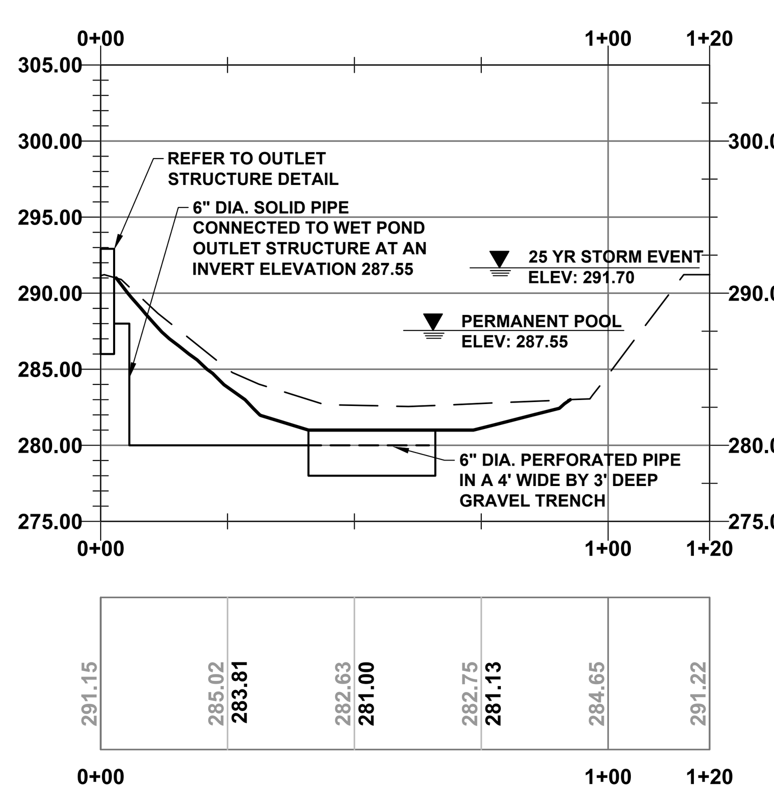

POND SECTION A

SCALE: 1"=30' HORIZ.
1"=10' VERT.

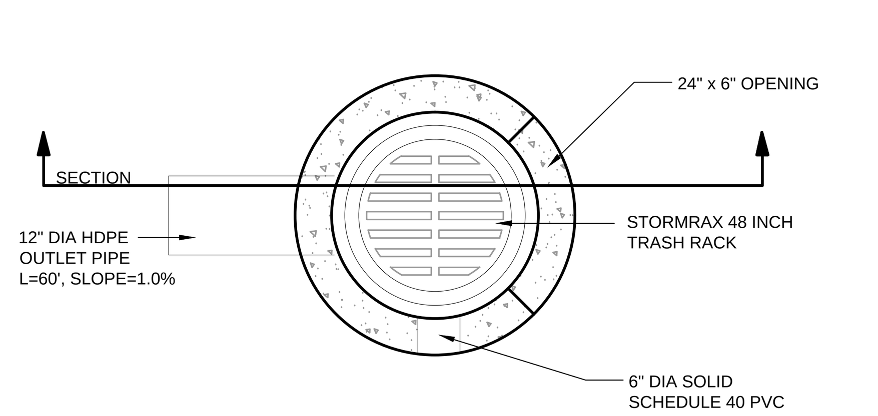

WET POND OUTLET STRUCTURE DETAILS

N.T.S.

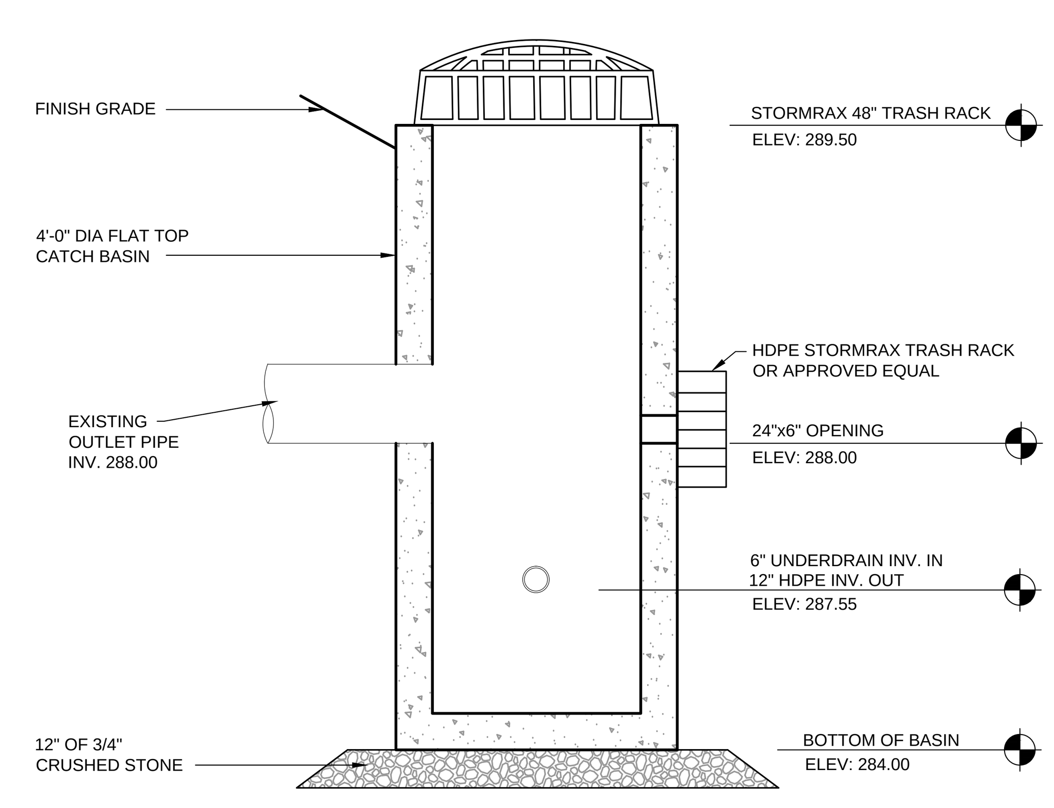

SECTION

EROSION CONTROL NOTES

1. ALL SEDIMENTATION AND EROSION CONTROL MEASURES SHALL BE IN ACCORDANCE WITH THE MAINE EROSION AND SEDIMENTATION CONTROL BMPS, PUBLISHED BY THE BUREAU OF LAND AND WATER QUALITY, MAINE DEPARTMENT OF ENVIRONMENTAL PROTECTION, LATEST EDITION.
2. SILT FENCE WILL BE INSPECTED, REPLACED AND/OR REPAIRED IMMEDIATELY FOLLOWING ANY SIGNIFICANT RAINFALL OR SNOW MELT OR LOSS OF SERVICEABILITY DUE TO SEDIMENT ACCUMULATION. AT A MINIMUM, ALL EROSION CONTROL DEVICES WILL BE OBSERVED WEEKLY.
3. DURING THE CONSTRUCTION PHASE, INTERCEPTED SEDIMENT WILL BE RETURNED TO CONSTRUCTION SITE.
4. SEDIMENT CONTROL DEVICES SHALL REMAIN IN PLACE AND BE MAINTAINED BY THE CONTRACTOR UNTIL AREAS UPSLOPE ARE STABILIZED BY A SUITABLE GROWTH OF GRASS. ONCE A SUITABLE GROWTH OF GRASS HAS BEEN OBTAINED, ALL TEMPORARY EROSION CONTROL ITEMS SHALL BE REMOVED BY THE CONTRACTOR. ANY SEDIMENT DEPOSITS REMAINING IN PLACE AFTER THEY ARE REMOVED SHALL BE DRESSED TO CONFORM WITH THE EXISTING GRADE, PREPARED, SEEDED, AND MULCHED IMMEDIATELY.
5. ALL DISTURBED AREAS WILL BE SEEDED WITH 2.5 LBS. RED FESCUE AND 0.5 LBS. RYE GRASS PER 1,000 SQUARE FEET AND MULCHED AT A RATE OF 90 LBS. PER 1,000 SQUARE FEET OR EQUIVALENT APPLICATION OF SEED AND MULCH.
6. A SUITABLE BINDER SUCH AS CURASOL OR TERRTACK WILL BE USED ON THE HAY MULCH FOR WIND CONTROL.
7. IF FINAL SEEDING OF DISTURBED AREAS IS NOT COMPLETED BY SEPTEMBER 15th OF THE YEAR OF CONSTRUCTION, THEN ON THAT DATE THESE AREAS WILL BE GRADED AND SEEDED WITH WINTER RYE AT THE RATE OF 112 POUNDS PER ACRE OR 3 POUNDS PER 1000 SQUARE FEET. THE RYE SEEDING WILL BE PRECEDED BY AN APPLICATION OF 3 TONS OF LIME AND 800 LBS. OF 10-20-20 FERTILIZER OR ITS EQUIVALENT. MULCH WILL BE APPLIED AT A RATE OF 90 POUNDS PER 1000 SQUARE FEET.
8. IF THE RYE SEEDING CANNOT BE COMPLETED BY OCTOBER 1st OR IF THE RYE DOES NOT MAKE ADEQUATE GROWTH BY DECEMBER 1st, THEN ON THOSE DATES, HAY MULCH WILL BE APPLIED AT 150 POUNDS PER 1000 SQUARE FEET.
9. ALL CATCH BASINS ARE TO BE PROTECTED BY STRAW BALE OR SILTFENCE IN ACCORDANCE WITH SECTION B-3 STORM DRAIN INLET PROTECTION OF THE MAINE BMP HANDBOOK. SURROUNDING AREAS CAN BE EXCAVATED OR LEFT LOW AS A SEDIMENT TRAP. CURB INLETS SHALL BE PROTECTED BY GUTTERGATORS, OR APPROVED EQUIVALENT.
10. INTERIOR SILT FENCES ALONG CONTOUR DIVIDING FLAT AND STEEP SLOPES, AREAS WITH DIFFERENT DISTURBANCE SCHEDULES, AROUND TEMPORARY STOCKPILES OR IN OTHER UNSPECIFIED POSSIBLE CIRCUMSTANCES SHOULD BE CONSIDERED BY THE CONTRACTOR. THE INTENT OF SUCH INTERIOR SILT FENCES IS TO LIMIT SEDIMENT TRANSPORT WITHIN THE SITE TOWARD THE PROTECTED CATCH BASIN INLETS TO MINIMIZE SEDIMENT REMOVAL REQUIRED BY THE EROSION CONTROL NOTE 9 PROTECTIONS AND EXTEND LIFE OF SUCH DEVICES.
11. THE CONTRACTOR SHALL PROVIDE A SEDIMENT BASIN FOR ALL WATER PUMPED FROM EXCAVATIONS. BASIN SHALL BE DESIGNED AND CONSTRUCTED IN ACCORDANCE WITH THE "MAINE EROSION AND SEDIMENT HANDBOOK FOR CONSTRUCTION: BEST MANAGEMENT PRACTICES". THE CONTRACTOR SHALL SUBMIT FOR REVIEW/APPROVAL PRIOR TO BEGINNING ANY PROJECT WORK.
12. CONSTRUCTION OVERSIGHT:
THE CONTRACTOR WILL RETAIN THE SERVICES OF A PROFESSIONAL ENGINEER TO INSPECT THE CONSTRUCTION AND STABILIZATION OF ALL STORMWATER MANAGEMENT STRUCTURES. IF NECESSARY, THE INSPECTING ENGINEER WILL INTERPRET THE POND'S CONSTRUCTION PLAN FOR THE CONTRACTOR. ONCE ALL STORMWATER MANAGEMENT STRUCTURES ARE CONSTRUCTED AND STABILIZED, THE INSPECTING ENGINEER WILL NOTIFY THE DEPARTMENT IN WRITING WITHIN 30 DAYS TO STATE THAT THE POND HAS BEEN COMPLETED. ACCOMPANYING THE ENGINEER'S NOTIFICATION MUST BE A LOG OF THE ENGINEER'S INSPECTIONS GIVING THE DATE OF EACH INSPECTION, THE TIME OF EACH INSPECTION, AND THE ITEMS INSPECTED ON EACH VISIT, AND INCLUDE ANY TESTING DATA OR SIEVE ANALYSIS DATA OF EVERY MINERAL SOIL AND SOIL MEDIA SPECIFIED IN THE PLANS AND USED ON SITE.
13. WETPONDS
INSPECTION BY A PROFESSIONAL ENGINEER WILL CONSIST OF WEEKLY VISITS TO THE SITE TO INSPECT THE INSTALLATION OF EACH POND'S EMBANKMENT CONSTRUCTION, STORMWATER INLET, UNDERDRAINED GRAVEL OUTLET, GRAVEL OUTLET FILTER MATERIAL MAKEUP AND PLACEMENT, OUTLET CONTROL STRUCTURE, CLAY LINER (IF APPLICABLE), AND EMERGENCY SPILLWAY CONSTRUCTION FROM INITIAL GROUND DISTURBANCE TO FINAL STABILIZATION OF THE POND. AN INSPECTION OF THE UNDERDRAINED GRAVEL OUTLET SHALL ALSO BE PERFORMED ONE YEAR AFTER THE FINAL STABILIZATION OF THE POND.
14. BASIC STANDARDS - EROSION CONTROL MEASURES:
MINIMUM EROSION CONTROL MEASURES WILL NEED TO BE IMPLEMENTED AND THE CONTRACTOR WILL BE RESPONSIBLE TO MAINTAIN ALL COMPONENTS OF THE EROSION CONTROL PLAN UNTIL THE SITE IS FULLY STABILIZED. HOWEVER, BASED ON SITE AND WEATHER CONDITIONS DURING CONSTRUCTION, ADDITIONAL EROSION CONTROL MEASURES MAY NEED TO BE IMPLEMENTED. ALL AREAS OF INSTABILITY AND EROSION MUST BE REPAIRED IMMEDIATELY DURING CONSTRUCTION AND NEED TO BE MAINTAINED UNTIL THE SITE IS FULLY STABILIZED OR VEGETATION IS ESTABLISHED. A CONSTRUCTION LOG MUST BE MAINTAINED FOR THE EROSION AND SEDIMENTATION CONTROL INSPECTIONS AND MAINTENANCE

THE MAINE EROSION AND SEDIMENT CONTROL HANDBOOK FOR CONSTRUCTION: BEST MANAGEMENT PRACTICES AS PUBLISHED IN 1991 BY THE CUMBERLAND COUNTY SOIL AND WATER CONSERVATION DISTRICT AND THE MAINE DEPARTMENT OF ENVIRONMENTAL PROTECTION HAS BEEN CHANGED TO THE “MAINE EROSION AND SEDIMENT CONTROL BMPS” PUBLISHED BY THE MAINE DEP IN 2003. ALL REFERENCES SHOULD BE CHANGED TO THE NEW MANUAL. HTTP://WWW.MAINE.GOV/DEP/BLWQ/DOCSTAND/ESCBMPS/INDEX.HTM

GENERAL NOTES

1. THE UTILITY LOCATIONS SHOWN ARE APPROXIMATE AND REQUIRE FIELD VERIFICATION BY THE CONTRACTOR.
2. CONTRACTOR SHALL COORDINATE CONSTRUCTION ACTIVITY WITH UTILITY COMPANIES, EMERGENCY SERVICES, THE CITY, AND MDOT.
3. TEMPORARY BENCH MARKS (TBM'S) ARE GENERALLY SPIKES DRIVEN INTO THE BASE OF POWER POLES OR HYDRANT VALVE NUTS.
4. PROPERLY PROTECT AND DO NOT DISTURB PROPERTY IRONS AND MONUMENTS. IF DISTURBED, THE PROPERTY MONUMENT WILL BE RESET AT THE CONTRACTOR'S EXPENSE, BY A REGISTERED LAND SURVEYOR APPROVED BY THE ENGINEER.
5. ALL WASTEWATER FLOWS IN EXISTING SEWERS MUST BE MAINTAINED DURING CONSTRUCTION. COST IS INCIDENTAL TO ALL PAY ITEMS.
6. CONTRACTOR SHALL PERFORM ALL CONSTRUCTION ACTIVITIES RELATED TO THE ROAD RECONSTRUCTION PROJECT WITHIN THE CONFINES OF EASEMENTS SECURED BY THE CITY OF AUGUSTA ANY CONSTRUCTION ACTIVITY, MATERIAL STORAGE ETC., TAKING PLACE ON PRIVATE PROPERTY SHALL BE WITH THE EXPRESS WRITTEN PERMISSION OF THE OWNER.
7. THE CONTRACTOR SHALL ASSUME THAT ALL BUILDINGS HAVE A SEWER AND WATER SERVICE, WHETHER SHOWN ON THE DRAWINGS OR NOT. THE CONTRACTOR SHALL BE RESPONSIBLE FOR FIELD LOCATION OF ALL SERVICE LOCATIONS.
8. ALL WATER SERVICES DISTURBED BY THE CONTRACTOR'S OPERATIONS SHALL BE REPAIRED AT NO ADDITIONAL COST TO THE OWNER.
9. IF UNEXPECTED HAZARDOUS WASTE OR MATERIALS CONTAINING HAZARDOUS WASTE ARE ENCOUNTERED DURING CONSTRUCTION, THE CONTRACTOR SHALL IMMEDIATELY CEASE WORK AND CONTACT THE OWNER, ENGINEER, CONTRACTING OFFICER, AND DEP. WHEN A DEP APPROVED ACTION PLAN IS DETERMINED, WORK SHALL CONTINUE, AND ALL HAZARDOUS WASTE AND MATERIALS CONTAINING HAZARDOUS WASTE SHALL BE DISPOSED OF IN COMPLIANCE WITH THE APPROVED ACTION PLAN AND ALL APPLICABLE FEDERAL, STATE, AND LOCAL LAWS.
10. MOVEABLE TRENCH BOXES SHALL BE USED ON OPEN TRENCH EXCAVATIONS.
11. THE CONTRACTOR SHALL PROVIDE ALL LABOR, EQUIPMENT, AND MATERIALS AS REQUIRED TO PERFORM THE WORK AS INDICATED ON THE DRAWINGS AND IN THE SPECIFICATIONS. ALL WORK SHALL BE COMPLETED IN ACCORDANCE WITH THE APPLICABLE FEDERAL, STATE AND LOCAL CODES.
12. THE WORK SHALL INCORPORATE EROSION CONTROL MEASURES WHICH ARE COMPLIANT WITH THE LATEST VERSION OF "MAINE EROSION AND SEDIMENT CONTROL HANDBOOK FOR CONSTRUCTION: BEST MANAGEMENT PRACTICES".
13. THE LOCATION, TYPE AND SIZE OF EXISTING PIPES, DUCTS, CONDUITS AND OTHER UNDERGROUND STRUCTURES SHOWN ON THE DRAWINGS ARE NOT WARRANTED TO BE EXACT NOR IS IT WARRANTED THAT ALL UNDERGROUND STRUCTURES ARE SHOWN. CONTRACTOR SHALL FIELD VERIFY ALL UTILITY LOCATIONS PRIOR TO COMMENCEMENT OF CONSTRUCTION. DEPTH OF SERVICES ARE UNKNOWN AND SHALL BE FIELD VERIFIED BY THE CONTRACTOR. EXCAVATING TEST PITS AS NECESSARY TO VERIFY UTILITY LOCATIONS AND DEPTHS SHALL BE INCIDENTAL TO THIS PROJECT.
14. THE CONTRACTOR SHALL COORDINATE ALL CONSTRUCTION WITH THE CITY OF AUGUSTA, MAINE, UTILITY COMPANIES, DIG SAFE, EMERGENCY SERVICES AND MAINE DEPARTMENT OF TRANSPORTATION (MDOT) WHERE APPLICABLE. CONTRACTOR SHALL NOTIFY ALL UTILITIES PRIOR TO COMMENCING WORK TO ALLOW SUFFICIENT TIME TO LOCATE AND MARK THE LOCATION OF ALL BURIED UTILITIES. CONTRACTOR SHALL ALSO CONTACT "DIG SAFE", TELEPHONE NO 800-225-4977. REPAIR OF ANY DAMAGED UTILITY WILL BE INCIDENTAL TO THIS PROJECT.
15. INSULATE ALL WATER MAINS WITH LESS THAN 5.0 FEET OF COVER, OR WHERE DIRECTED BY THE ENGINEER. RIGID INSULATION REQUIRED: CLOSED-CELL RIGID FOAMED POLYSTYRENE, EQUAL TO "STYROFOAM" HI-60, BY DOW CHEMICAL. 2" THICK BY 4' WIDE, UNLESS OTHERWISE NOTED.
16. CONTRACTOR SHALL MAINTAIN TRAFFIC IN A SAFE MANNER AT ALL TIMES DURING CONSTRUCTION. THE CONTRACTOR SHALL MAKE EVERY EFFORT TO MAINTAIN CONTINUOUS TRAFFIC FLOW DURING CONSTRUCTION. THE ROADS SHALL NOT BE CLOSED TO TRAFFIC WITHOUT PERMISSION FROM THE CITY OF AUGUSTA.
17. THE CONTRACTOR SHALL TAKE ALL NECESSARY PRECAUTIONS TO PREVENT EQUIPMENT FLUIDS FROM REACHING ANY WATER COURSE. ANY INADVERTENT FLUID DISCHARGES SHALL BE IMMEDIATELY CLEANED FROM THE WATERS USING WHATEVER MEANS NECESSARY, AS DETERMINED BY THE ENGINEER.
18. RESTORE ALL AREA DISTURBED BY CONTRACTOR'S OPERATIONS TO ORIGINAL CONDITION (GRAVEL, PAVEMENT, GRASS, ETC.) UNLESS NOTED OTHERWISE ON PLANS. RESTORATION OF GRAVEL ROAD AND DRIVEWAY SURFACES AND LAWNS DAMAGED BY CONTRACTOR SHALL BE INCIDENTAL TO THE PROJECT.
19. EXISTING FACILITIES AND IMPROVEMENTS (I.E. TREES, LIGHT POLES, SIGNS, ETC.) SHALL BE REMOVED AND REPLACED OR PROTECTED AS REQUIRED DURING CONSTRUCTION. THE ASSOCIATED COSTS ARE INCIDENTAL TO THE PROJECT. BRACING OF UTILITY POLES, WHERE REQUIRED, SHALL BE INCIDENTAL TO THE PROJECT AND NO SEPARATE PAYMENT SHALL BE MADE.
20. IT IS ASSUMED THAT THERE IS NO BEDROCK WITHIN THE PROJECT LIMITS, BUT A PROVISION WITHIN THE BID FORM PROVIDES FOR A UNIT COST IN THE EVENT THAT BEDROCK OR ROCKS EXCEEDING 2 CY IN VOLUME ARE ENCOUNTERED. PAYMENT WILL BE IN A UNIT PRICE BASIS AS INDICATED IN THE SPECIFICATIONS.
21. WHENEVER POSSIBLE, EXISTING PLANTINGS SHALL BE PRESERVED BY WHATEVER METHOD NECESSARY INCLUDING TRANSPLANTING AND/OR TEMPORARY RELOCATION.
22. WATER SERVICE SHALL NOT BE DISCONTINUED AT ANY HOUSE PRIOR TO 10:00 AM WITHOUT WRITTEN NOTIFICATION FROM PROPERTY OWNER.
23. RESTRICT ACCESS TO SITE THROUGH THE USE OF APPROPRIATE SIGNAGE, GATES, BARRIERS, FENCES, ETC. SITE SHALL BE LEFT WITH APPROPRIATE SAFETY MEASURES IN PLACE DURING NON-WORKING HOURS. NO TRENCH SHALL BE LEFT OPEN DURING NON-WORKING HOURS. SITE SAFETY IS THE RESPONSIBILITY OF CONTRACTOR, DURING BOTH WORKING AND NON-WORKING HOURS.
24. CONTRACTOR IS RESPONSIBLE FOR OBTAINING ALL NECESSARY CONSTRUCTION PERMITS. PERMIT APPLICATIONS SHALL BE SUBMITTED WITH ADEQUATE TIME SO AS NOT TO DELAY CONSTRUCTION.
25. EXISTING FLOWS VARY SIGNIFICANTLY FROM HOUR TO HOUR AND SEASON TO SEASON. PEAK FLOWS ARE INFLUENCED BY RAIN EVENTS AND GROUNDWATER DEPTHS. THE CONTRACTOR SHALL CONDUCT HIS OPERATIONS TO BE PREPARED FOR THESE VARIABLE FLOW CONDITIONS.
26. WHEN MAKING INTERCONNECTIONS TO ACTIVE COMBINED, SEPARATED, OR STORM SEWER LINES, PERFORM SUCH WORK AT LOW FLOW TIMES AND IN A MANNER TO MAINTAIN FLOWS. THE CONTRACTOR IS RESPONSIBLE FOR PROVIDING TEMPORARY BY-PASS PUMPING OF FLOWS OR OTHER MEANS AS NECESSARY TO ENSURE CONTINUOUS FLOW. THIS COST SHALL BE CONSIDERED INCIDENTAL TO THE CONTRACT.
27. ALL WORK OF ITEMS SCHEDULED FOR EITHER REMOVAL, DISPOSAL, PLUG, OR ABANDON SHALL BE PERFORMED AS INDICATED ON THE DRAWINGS AND SHALL BE CONSIDERED INCIDENTAL TO THE CONTRACT. NO OTHER PAYMENT SHALL BE MADE.
28. ALL FINISH SURFACES SHALL BE INSTALLED TO PROMOTE POSITIVE DRAINAGE. IN NO WAY SHALL THE NEW FINISH SURFACES AND CATCH BASINS CREATE DRAINAGE PROBLEMS THAT DID NOT EXIST PRIOR TO CONSTRUCTION.
29. INSULATE ALL WATER MAINS WITH LESS THAN 5.5 FEET OF COVER, OR WHERE DIRECTED BY THE ENGINEER. RIGID INSULATION REQUIRED: CLOSED-CELL RIGID FOAMED POLYSTYRENE, EQUAL TO "STYROFOAM" HI-60, BY DOW CHEMICAL. 2" THICK BY 4' WIDE, UNLESS OTHERWISE NOTED.
30. CONTRACTOR SHALL BE RESPONSIBLE FOR THE LAYOUT OF ALL PROPOSED WORK AS SHOWN ON DRAWINGS.
31. THE LOCATIONS OF ALL PROPERTY LINES AND RIGHT OF WAYS ARE APPROXIMATE (SHOWN FOR REFERENCE ONLY), UNLESS NOTED OTHERWISE. PROPERTY LINES AND RIGHT OF WAYS SHOWN ARE NOT INTENDED TO REPRESENT LEGAL BOUNDARIES. IT IS ASSUMED THAT THE RIGHT OF WAY IS DEFINED BY THE OUTSIDE EDGE OF EXISTING CURB OR OUTSIDE EDGE OF SIDEWALK WHERE APPLICABLE.
32. HOURS FOR THE PROJECT WILL BE MONDAY THROUGH FRIDAY, FROM 7:00 AM TO 7:00 PM, UNLESS OTHERWISE AUTHORIZED BY THE OWNER.
33. ALL WASTEWATER FLOWS IN EXISTING SEWERS MUST BE MAINTAINED DURING CONSTRUCTION. COST IS INCIDENTAL TO ALL PAY ITEMS.
34. THE CONTRACTOR SHALL PROVIDE A SEDIMENT BASIN FOR ALL WATER PUMPED FROM EXCAVATIONS. BASIN SHALL BE DESIGNED AND CONSTRUCTED IN ACCORDANCE WITH THE "MAINE EROSION AND SEDIMENT HANDBOOK FOR CONSTRUCTION: BEST MANAGEMENT PRACTICES". THE CONTRACTOR SHALL SUBMIT FOR REVIEW/APPROVAL PRIOR TO BEGINNING ANY PROJECT WORK.
35. EXISTING FIRE HYDRANTS TO REMAIN ACTIVE AT ALL TIMES.

Waterville
44 Main Street
Suite 204
Waterville, ME
T.207-680-2202
F.207-680-2204

Presque Isle
549 Main Street
PO Box 827
Presque Isle, ME
T.207-764-8412
F.207-764-8414

Brewer
465 South Main Street
PO Box 639
Brewer, ME
T.207-989-4824
F.207-989-4881

Lewiston
640 Main Street
Lewiston, ME
T.207-795-6009
F.207-795-6128

Bar Harbor
1366 State Hwy 102
Bar Harbor, ME
T.207-288-0587
F.207-288-0588

Machias
61 Dublin Street
PO Box 587
Machias, ME
T.207-255-3270
F.207-255-8367

CES INC
Engineers • Environmental Scientists • Surveyors

PROJECT TITLE
DARLINGS CORPORATION
AUGUSTA, MAINE

SHEET TITLE
SITE DETAILS

STATE OF MAINE
CHRISTOPHER MICHAUD
No. 12674
06/30/2015
LICENSED PROFESSIONAL ENGINEER

SCALE	NO SCALE
DATE	2015-05-26
DRAWN BY	WAB
CHECKED BY	SMT
DESIGNED BY	SMT
APPROVED BY	SMT
JOB NUMBER	10570.005
DRAWING NUMBER	C501

MAGNETIC NORTH - 2000

LEGAL DESCRIPTION

A certain lot or parcel of land with the improvements thereon situate in the City of Augusta, County of Kennebec, State of Maine, more particularly described as follows:

Beginning on the northeasterly line of Western Avenue in said Augusta at the southeasterly corner of land described in a deed to Shuman Family LLC recorded in Kennebec County Registry of Deeds, Book 6492, Page 275; thence along the southeasterly line of said Shuman Family LLC, North 39 degrees, 8 minutes, 52 seconds East, a distance of 477.5 feet to the southerly boundary of land described as Parcel One in a deed to Charles Shuman and Nancy B. Shuman recorded in said Registry, Book 8066, Page 290; thence along the southerly boundary of said Parcel One, South 55 degrees, 19 minutes, 59 seconds East, a distance of 54.5 feet to the southeasterly corner of said premises described as Parcel One in the deed recorded in Kennebec County Registry of Deeds, Book 8066, Page 290; thence along the easterly boundary of said Parcel One, North 34 degrees, 48 minutes, 31 seconds East, a distance of 268.6 feet to the northeasterly corner of said Parcel One; thence along the northerly boundary of said Parcel One, North 47 degrees, 33 minutes, 37 seconds West, a distance of 55.3 feet to the southeasterly corner of Parcel Two in the deed to Charles Shuman and Nancy B. Shuman recorded in said Registry, Book 8066, Page 290; thence along the easterly line of said Parcel Two, North 32 degrees, 48 minutes, 27 seconds East, a distance of 150.0 feet to the northeasterly corner of said Parcel Two; thence along the northerly boundary of said Parcel Two, North 48 degrees, 13 minutes, 40 seconds West, a distance of 143.9 feet to the westerly boundary of land shown as the "8 acre remainder" on a plan entitled, "Leighton Road Subdivision …", recorded in Kennebec County Registry of Deeds, Map File D-89112; thence along the westerly boundary of said "8 acre remainder" North 30 degrees, 50 minutes, 52 seconds East, a distance of 211.2 feet to an angle in said boundary; thence continuing along the westerly boundary of said "8 acre remainder" North 35 degrees, 3 minutes, 28 seconds East, a distance of 282.6 feet an iron rod found; thence along the westerly boundary of Parcel D2 as shown on said plan of Leighton Road Subdivision recorded in Kennebec County Registry of Deeds, Map File D-89112, South 0 degrees, 18 minutes, 10 seconds West, a distance of 571.4 feet to an iron rod found; thence along the southerly boundary of said parcel D2, South 88 degrees, 24 minutes, 42 seconds East, a distance of 183.1 feet to an iron rod found marking the northwesterly corner of Parcel B as shown on said plan of Leighton Road Subdivision recorded in Kennebec County Registry of Deeds, Map File D-89112; thence along the westerly boundary of said Parcel B, South 0 degrees, 20 minutes, 8 seconds West, a distance of 375.1 feet to an iron rod marking the northwesterly corner of Parcel C as shown on said plan of Leighton Road Subdivision recorded in Kennebec County Registry of Deeds, Map File D-89112; thence along the westerly boundary of Parcel C, South 21 degrees, 49 minutes, 59 seconds East, a distance of 339.8 feet to the southwesterly corner of Parcel C; thence along the southerly boundary of said Parcel C, North 59 degrees, 7 minutes, 30 seconds East a distance of 161.22 feet to an angle in said boundary; thence continuing along the southerly boundary of said Parcel C, North 76 degrees, 2 minutes, 56 seconds East, a distance of 238.4 feet to the westerly line of Leighton Road; thence along the westerly line of Leighton Road, South 7 degrees, 29 minutes, 53 seconds East, a distance of 91.0 feet to the northeasterly corner of land described in a deed to Winifred G. Turner recorded in Kennebec County Registry of Deeds, Book 8444, Page 25; thence along the northerly boundary of said Turner land, South 76 degrees, 10 minutes, 34 seconds West, a distance of 229.0 feet to the northwesterly corner of said Turner land; thence along the westerly boundary of said Turner land, South 13 degrees, 49 minutes, 26 seconds East, a distance of 100.0 feet to an iron pipe found marking the northwesterly corner of land described in a deed to Arnold Haskell recorded in Kennebec County Registry of Deeds, Book 8820, Page 289; thence along the westerly boundary of said Haskell land, South 10 degrees, 22 minutes, 1 second East, a distance of 50.3 feet to an iron pipe marking the northeasterly corner of land described in a deed to Beverly G. Naoum, et al., recorded in Kennebec County Registry of Deeds, Book 7698, Page 33; thence along the northerly boundary described in the deed to Beverly G. Naoum, et al., South 80 degrees, 17 minutes, 48 seconds West, a distance of 149.6 feet to an iron pipe found; thence along the westerly boundary described in the deed to Beverly G. Naoum, et al., South 10 degrees, 25 minutes, 29 seconds East, a distance of 150.0 feet to the northerly line of Old Winthrop Road; thence along the northerly line of Old Winthrop Road, South 76 degrees, 39 minutes, 3 seconds West, a distance of 122.4 feet to a concrete monument; thence along the northerly line of Old Winthrop Road, South 81 degrees, 37 minutes, 15 seconds West, a distance of 102.5 feet to a concrete monument; thence continuing along the northerly line of Old Winthrop Road, South 81 degrees, 37 minutes, 15 seconds West, a distance of 105.8 feet to the southeasterly boundary of land described as Parcel 1 in a deed to Charles Shuman and Nancy B. Shuman recorded in Kennebec County Registry of Deeds, Book 6271, Page 96; thence along the southeasterly line of said Parcel 1, North 30 degrees, 9 minutes, 39 seconds East, a distance of 410.0 feet to the most easterly corner of said Parcel 1; thence along the northeasterly line of Parcel 1, North 56 degrees, 59 minutes, 24 seconds West, a distance of 144.0 feet to the northwesterly corner of said Parcel 1; thence along the northwesterly boundary of Parcel 1 described in the deed recorded in Kennebec County Registry of Deeds, Book 6271, Page 96, South 35 degrees, 23 minutes, 19 seconds West, a distance of 481.5 feet to the northerly line of Western Avenue as said road line is depicted on plans prepared by the Maine State Highway Commission, SHC File No. 6-145, sheets number 7 and 8 of 8 sheets, recorded in Kennebec County Registry of Deeds, Plan Book 37, Page 39; thence generally westerly following the northerly boundary of Western Avenue as defined by the above-referenced plans prepared by the Maine State Highway Commission, a distance of 716 feet to the point of beginning.

Bearings referenced herein are oriented to magnetic north, 2000, as determined by a survey of the within described property by Plisga & Day, Land Surveyors.

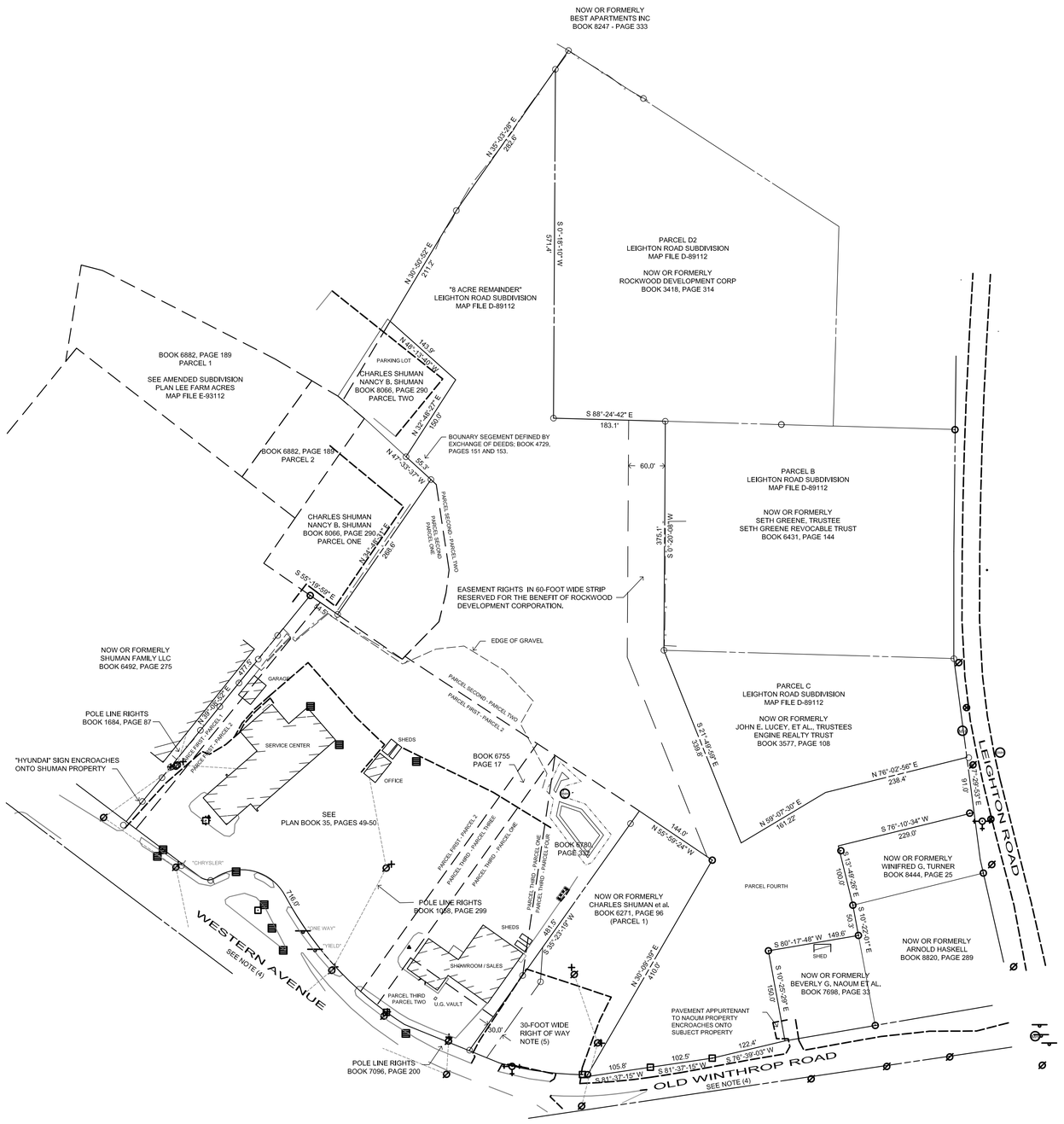

SCALE: 1"= 100'

100' 0 100' 200' 300' 400'

NOTES

(1) DOCUMENTS REFERENCED ON THIS PLAN ARE RECORDED IN KENNEBEC COUNTY REGISTRY OF DEEDS UNLESS OTHERWISE NOTED.

(2) THIS PLAN REFLECTS THE RESULTS OF A SURVEY TO LOCATE THE REAL PROPERTY INTERESTS IDENTIFIED AS FOLLOWS:

PARCEL FIRST

1. C. PETER BLOUIN, JR., AND MARY DUKE BLOUIN, TRUSTEES OF THE MARY DUKE BLOUIN REVOCABLE TRUST BY VIRTUE OF THE TRUSTEES DEED FROM C. PETER BLOUIN, JR., AND MARY DUKE BLOUIN, TRUSTEES OF THE C. PETER BLOUIN REVOCABLE TRUST DATED MAY 17, 2002, AND RECORDED IN BOOK 6918, PAGE 169 (40% INTEREST).

2. JOHN DUKE BLOUIN BY VIRTUE OF THE TRUSTEES DEED FROM C. PETER BLOUIN, JR., AND MARY DUKE BLOUIN, TRUSTEES OF THE C. PETER BLOUIN REVOCABLE TRUST, DATED JANUARY 3, 2006, AND RECORDED IN BOOK 8761, PAGE 34 (60% INTEREST).

PARCEL SECOND

BLOUIN MOTORS, INC. BY VIRTUE OF THE DEED FROM DIRIGO PROPERTIES, INC. DATED JUNE 5, 1989 AND RECORDED IN BOOK 3621, PAGE 344 AND THE DEED FROM ROCKWOOD DEVELOPMENT CORPORATION DATED NOVEMBER 15, 2002 AND RECORDED IN BOOK 7163, PAGE 1.

PARCEL THIRD

DUKE PROPERTIES, LLC BY VIRTUE OF THE FOLLOWING:

1. DEED FROM ELLA A. COLLINS DATED DECEMBER 29, 1999 AND RECORDED IN BOOK 6128, PAGE 147.

2. TRUSTEES DEED FROM C. PETER BLOUIN, JR., AND MARY DUKE BLOUIN, TRUSTEES OF THE C. PETER BLOUIN REVOCABLE TRUST DATED DECEMBER 28, 2001 AND RECORDED IN BOOK 6755, PAGE 17.

3. TRUSTEES DEED FROM C. PETER BLOUIN, INDIVIDUALLY AND C. PETER BLOUIN AND MARY DUKE BLOUIN, TRUSTEES OF THE C. PETER BLOUIN REVOCABLE TRUST DATED JANUARY 11, 2002 AND RECORDED IN BOOK 6780, PAGE 332.

4. PERSONAL REPRESENTATIVE'S DEED FROM WARREN E. CREASY, JR., PERSONAL REPRESENTATIVE OF THE ESTATE OF ELLA A. COLLINS DATED AUGUST 21, 2001 AND RECORDED IN BOOK 6624, PAGE 35.

PARCEL FOURTH

DUKE PROPERTIES, LLC BY VIRTUE OF THE PERSONAL REPRESENTATIVES DEED FROM WARREN E. CREASY, JR., DATED SEPTEMBER 10, 2003 AND RECORDED IN BOOK 7627, PAGE 104.

(3) BUILDINGS LOCATED ON THE SUBJECT PREMISES DO NOT LIE WITHIN A "SPECIAL FLOOD HAZARD AREA" AS DEPICTED ON FLOODWAY MAPS PREPARED BY THE FEDERAL EMERGENCY MANAGEMENT AGENCY FOR THE MUNICIPALITY OF AUGUSTA, MAINE.

(4) WESTERN AVENUE, OLD WINTHROP ROAD AND LEIGHTON ROAD ARE PUBLIC HIGHWAYS. THE HIGHWAY BOUNDARIES OF WESTERN AVENUE AND OLD WINTHROP ROAD ARE DEPICTED ON PLANS RECORDED IN PLAN BOOK 37, PAGES 27 AND 39. RIGHTS IN ADJACENT HIGHWAYS ARE ALSO DESCRIBED IN THE FOLLOWING INSTRUMENTS: BOOK 937, PAGE 33; BOOK 1052, PAGE 391; BOOK 1096, PAGE 160; BOOK 1107, PAGE 232; BOOK 1429, PAGE 433; BOOK 1440, PAGE 71; BOOK 1446, PAGE 2; AND BOOK 1450, PAGE 784.

(5) 30-FOOT WIDE RIGHT OF WAY FOR BENEFIT OF PROPERTY DESCRIBED IN DEED TO C. PETER BLOUIN, BOOK 1074, PAGE 82.

(6) THE TOTAL AREA OF THE SUBJECT PROPERTY AS DETERMINED BY THIS SURVEY IS 17.76 ACRES.

(7) PARCEL FOURTH IS SUBJECT TO EASEMENT RIGHTS FOR DRAINAGE APPURTENANT TO PREMISES DESCRIBED IN BOOK 3195, PAGE 319.

(8) THIS PLAN REFLECTS RELEVANT SURVEY MATTERS NOTED IN A TICOR TITLE INSURANCE COMPANY COMMITMENT FOR TITLE INSURANCE FILE # 07-5020, WITH AN EFFECTIVE DATE OF APRIL 26, 2007 AT 4:00PM.

SURVEY STANDARD

THIS PLAN WAS PREPARED FROM INFORMATION OBTAINED BY A SURVEY CONFORMING SUBSTANTIALLY TO THE REQUIREMENTS OF TECHNICAL STANDARDS CONTAINED IN CHAPTER 90, PART 2, OF THE RULES OF THE BOARD OF LICENSURE FOR PROFESSIONAL LAND SURVEYORS, EFFECTIVE APRIL 1, 2001.

RICHARD A. DAY, MAINE LICENSED
PROFESSIONAL LAND SURVEYOR No. 1151

STATE OF MAINE
RICHARD
A.
DAY
NO. 1151
PROFESSIONAL
LAND SURVEYOR

SYMBOLS LEGEND

(FEATURES ARE EXISTING UNLESS NOTED)

- IRON ROD SET (48" No. 6 REBAR)
- IRON PIPE FOUND
- IRON ROD/BOLT FOUND
- GRANITE/CONCRETE MONUMENT
- WOOD POST
- UTILITY POLE
- GUY/ANCHOR
- HYDRANT
- WATER GATE/VALVE
- CATCH BASIN
- MANHOLE
- LAMP POST
- TEST PIT/BORING
- SURVEY CONTROL POINT
- DIRECTIONAL SIGN
- field / trees — VEGATATION LINE
- EDGE OF PAVED OR GRAVEL SURFACE
- PROPERTY LINE
- OVERHEAD WIRES

PROPERTY BOUNDARY SURVEY
PROPERTIES OF
TRUSTEES OF THE MARY DUE BLOUIN REVOCABLE TRUST
JOHN DUKE BLOUIN
BLOUIN MOTORS, INC.
DUKE PROPERTIES, LLC
WESTERN AVENUE, OLD WINTHROP ROAD & LEIGHTON ROAD
AUGUSTA, MAINE
FOR
DARLING'S, CITIZENS BANK NEW HAMPSHIRE
AND
TICOR TITLE INSURANCE COMPANY

PLISGA & DAY
LAND SURVEYORS
72 MAIN STREET
BANGOR, ME 04401
(207) 947-0019

PROJECT:	SHEET:
00262	1
PLAN DATE: 05-01-2007	
SCALE: 1"=100'	