Kathryn Fatulippe 289-2691 or 289-7752

87013

Department of Human Services
Division of Health Engineering
(207)289-3826

SUBSURFACE WASTEWATER DISPOSAL SYSTEM APPLICATION

PROPERTY ADDRESS

Town Or Plantation	Augusta
Street Subdivision Lot #	Allenwood Park Road (Map 44 Lot 57)

PROPERTY OWNERS NAME

Last: Allen First: Leon A.

Applicant Name:	Leon A. Allen
Mailing Address of Owner/Applicant (If Different)	RFD 1, Box 180 Gardiner, Maine 04345

ok'd for Permit

M94457

AUGUSTA PERMIT # 1,130 TOWN COPY

Date Permit Issued: 8 15 87

$ 40.00 FEE ☐ If Double Fee Charged

Local Plumbing Inspector Signature

L.P.I. # 1208

Owner/Applicant Statement

I certify that the Information submitted is correct to the best of my knowledge and understand that any falsification is reason for the Local Plumbing Inspector to deny a Permit.

Kathryn J. Fatulippe — Signature of Owner/Applicant — Date

Caution: Inspection Required

I have inspected the installation authorized above and found it to be in compliance with the Subsurface Wastewater Disposal Rules.

Harry R. Tuttle — Local Plumbing Inspector Signature — 9/30/87 Date Approved

PERMIT INFORMATION

THIS APPLICATION IS FOR:
1. ☒ NEW SYSTEM
2. ☐ REPLACEMENT SYSTEM
3. ☐ EXPANDED SYSTEM
4. ☐ EXPERIMENTAL SYSTEM

SEASONAL CONVERSION
to be completed by the LPI
5. ☐ SYSTEM COMPLIES WITH RULES
6. ☐ CONNECTED TO SANITARY SEWER
7. ☐ SYSTEM INSTALLED – P# _____
8. ☐ SYSTEM DESIGN RECORDED AND ATTACHED

IF REPLACEMENT SYSTEM: n/a
YEAR FAILING SYSTEM INSTALLED _____
THE FAILING SYSTEM IS:
1. ☐ BED 3. ☐ TRENCH
2. ☐ CHAMBER 4. ☐ OTHER: _____

SIZE OF PROPERTY: 1 ± acre

ZONING: residential

THIS APPLICATION REQUIRES:
1. ☒ NO RULE VARIANCE
2. ☐ NEW SYSTEM VARIANCE
   Attach New System Variance Form
3. ☐ REPLACEMENT SYSTEM VARIANCE
   Attach Replacement System Variance Form
   a. ☐ Requiring Local Plumbing Inspector Approval
   b. ☐ Requires State and Local Plumbing Inspector Approval
4. ☐ MINIMUM LOT SIZE VARIANCE

DISPOSAL SYSTEM TO SERVE:
1. ☒ SINGLE FAMILY DWELLING
2. ☐ MODULAR OR MOBILE HOME
3. ☐ MULTIPLE FAMILY DWELLING
4. ☐ OTHER _____ SPECIFY

INSTALLATION IS:
COMPLETE SYSTEM
1. ☒ NON-ENGINEERED SYSTEM
2. ☐ PRIMITIVE SYSTEM (Includes Alternative Toilet)
3. ☐ ENGINEERED (+2000 gpd)

INDIVIDUALLY INSTALLED COMPONENTS:
4. ☐ TREATMENT TANK (ONLY)
5. ☐ HOLDING TANK _____ GAL
6. ☐ ALTERNATIVE TOILET (ONLY)
7. ☐ NON-ENGINEERED DISPOSAL AREA (ONLY)
8. ☐ ENGINEERED DISPOSAL AREA (ONLY)
9. ☐ SEPARATED LAUNDRY SYSTEM

TYPE OF WATER SUPPLY
proposed drilled well

DESIGN DETAILS (SYSTEM LAYOUT SHOWN ON PAGE 3)

TREATMENT TANK
1. ☒ SEPTIC: ☒ Regular ☐ Low Profile
2. ☐ AEROBIC

SIZE: 1000 GALS.

WATER CONSERVATION
1. ☒ NONE
2. ☐ LOW VOLUME TOILET
3. ☐ SEPARATED LAUNDRY SYSTEM
4. ☐ ALTERNATIVE TOILET
SPECIFY: _____

PUMPING
1. ☒ NOT REQUIRED
2. ☐ MAY BE REQUIRED (DEPENDING ON TREATMENT TANK LOCATION AND ELEVATION)
3. ☐ REQUIRED

DOSE: _____ GALS.

CRITERIA USED FOR DESIGN FLOW (BEDROOMS, SEATING, EMPLOYEES, WATER RECORDS, ETC.)
2-bedroom, single family dwelling
sized per Table 7-1 of the SSWD Rules (10-144A CMR 241)
(minimum design flow)

SOIL CONDITIONS USED FOR DESIGN PURPOSES

PROFILE	CONDITION
7	C

DEPTH TO LIMITING FACTOR: 15

SIZE RATINGS USED FOR DESIGN PURPOSES
1. ☐ SMALL
2. ☐ MEDIUM
3. ☒ MEDIUM-LARGE
4. ☐ LARGE
5. ☐ EXTRA LARGE

DISPOSAL AREA TYPE/SIZE
1. ☒ BED 600 Sq. Ft.
2. ☐ CHAMBER _____ Sq. Ft.
   ☐ REGULAR ☐ H-20
3. ☐ TRENCH _____ Linear Ft.
4. ☐ OTHER: _____

DESIGN FLOW: 180 gpd (GALLONS/DAY)

at test pit 1

RECEIVED JUL 10 1987

SITE EVALUATOR STATEMENT

On 6-20-87 (date) I conducted a site evaluation for this project and certify that the data reported is accurate. The system I propose is in accordance with the Subsurface Wastewater Disposal Rules.

William T. Noble — Site Evaluator Signature — 75 SE# — 6-30-87 Date

STATE OF MAINE WILLIAM T NOBLE #75 SITE EVALUATOR

(Local Plumbing Inspector's Signature if permit is for Seasonal Conversion.)

87013

SUBSURFACE WASTEWATER DISPOSAL SYSTEM APPLICATION

Department of Human Services
Division of Health Engineering

Town, City, Plantation	Street, Road, Subdivision	Owners Name
AUGUSTA	ALLENWOOD PARK ROAD	LEON A. ALLEN

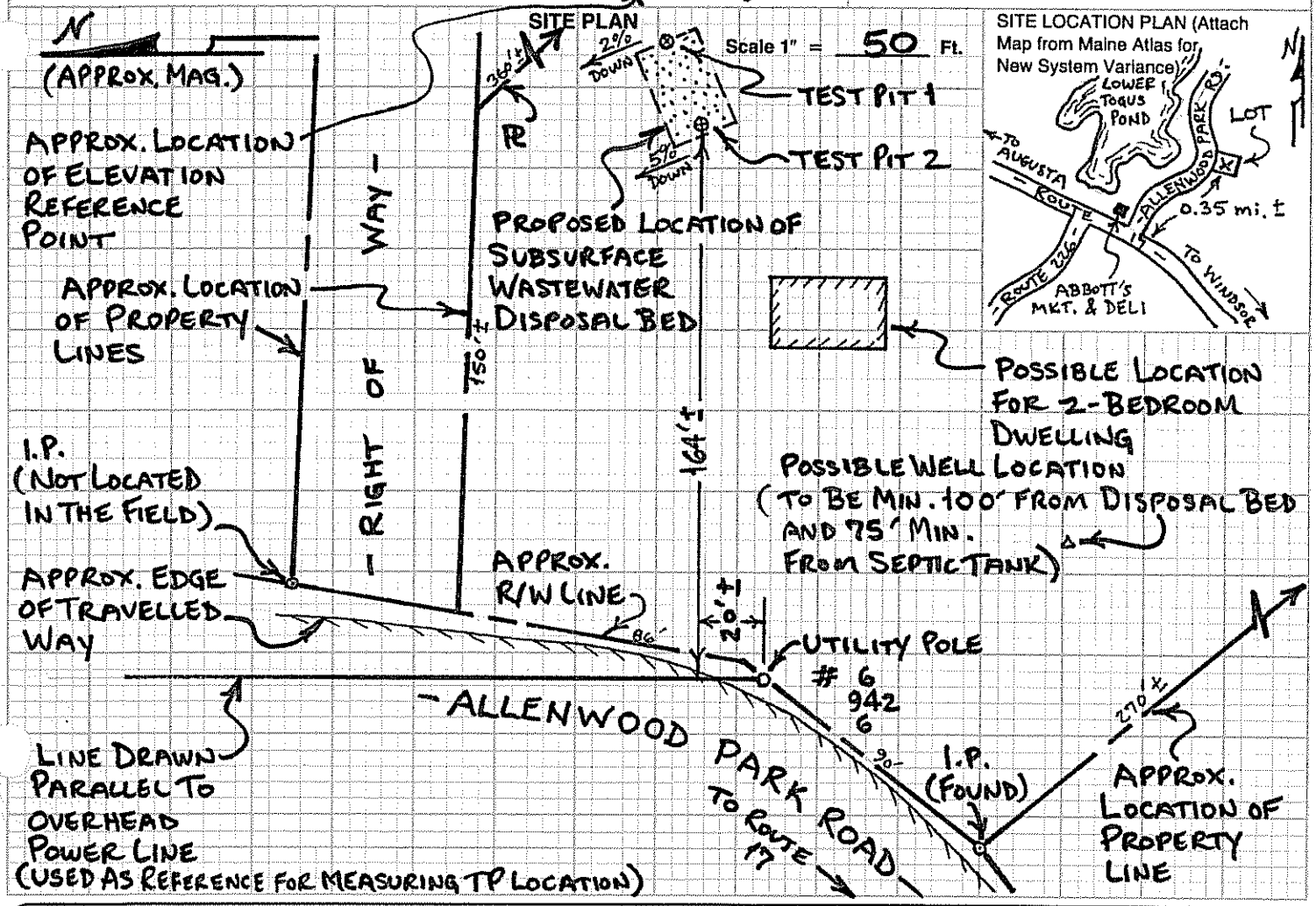

SOIL DESCRIPTION AND CLASSIFICATION (Location of Observation Holes Shown Above)

Observation Hole 1 ☒ Test Pit ☐ Boring

1" Depth of Organic Horizon Above Mineral Soil

DEPTH BELOW MINERAL SOIL SURFACE (Inches)

Depth	Texture	Consistency	Color	Mottling
0–6	STONY LOAM		DARK BROWN	
6–15	VERY FINE SANDY LOAM	FRIABLE	STRONG BROWN; YELLOWISH BROWN	
15–20	SILT LOAM	FIRM	OLIVE	COMMON DISTINCT
20–50	SILTY CLAY LOAM		OLIVE GRAY	MANY PROMINENT

Soil Profile	Classification Condition	Slope	Limiting Factor	
7	C	2 %	15"	☒ Ground Water ☒ Restrictive Layer ☐ Bedrock

Observation Hole 2 ☒ Test Pit ☐ Boring

2" Depth of Organic Horizon Above Mineral Soil

DEPTH BELOW MINERAL SOIL SURFACE (Inches)

Depth	Texture	Consistency	Color	Mottling
0–6	STONY FSL		DARK BROWN	
6–15	FINE SANDY LOAM	FRIABLE	STRONG BROWN; YELLOWISH BROWN; OLIVE BROWN	
15–20		FIRM	GRAYISH BROWN	COMMON DISTINCT
20–50				

NOTE: REFUSAL AT 20" (LARGE STONE)

Soil Profile	Classification Condition	Slope	Limiting Factor	
3	C	5 %	17"	☒ Ground Water ☒ Restrictive Layer ☐ Bedrock

William J. Noble
Site Evaluator Signature

75
SE#

6-30-87
Date

HHE-200 Rev. 1/84

Department of Human Services
Division of Health Engineering

SUBSURFACE WASTEWATER DISPOSAL SYSTEM APPLICATION

Town, City, Plantation	Street, Road, Subdivision	Owners Name
AUGUSTA	ALLENWOOD PARK ROAD	LEON A. ALLEN

SUBSURFACE WASTEWATER DISPOSAL PLAN

Scale 1" = 20 Ft.

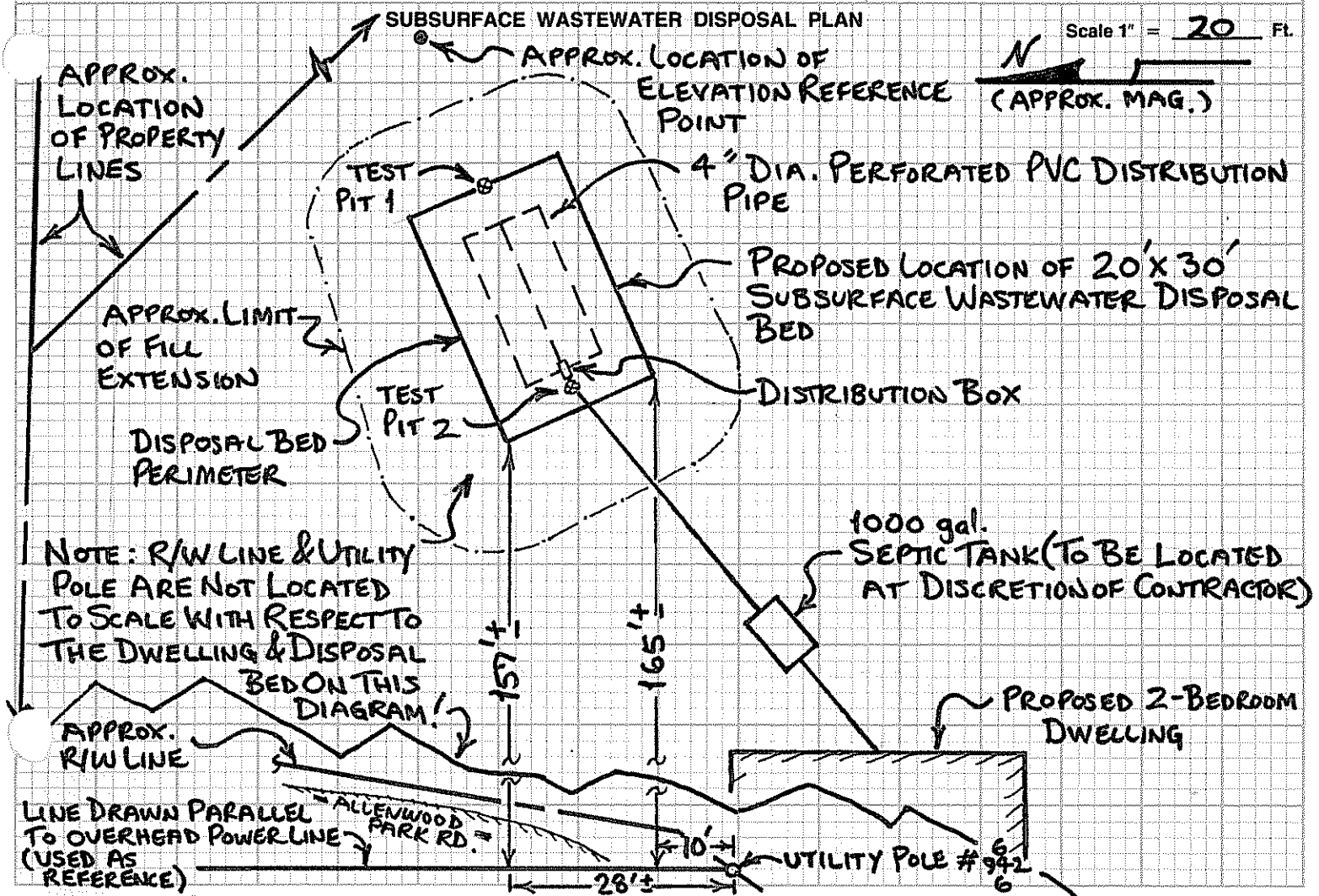

FILL REQUIREMENTS

Depth of Fill (Upslope)	21"
Depth of Fill (Downslope) (AT TEST PIT 1 AREA)	26±"

CONSTRUCTION ELEVATIONS

Reference Elevation is	0.0"
Bottom of Disposal Area	-65.0"
Top of Distribution Lines	-54.0"

ELEVATION REFERENCE POINT LOCATION & DESCRIPTION

NAIL WITH ORANGE FLAGGING IN OAK TREE, 68" ABOVE GROUND LEVEL AT TREE BASE.

NOTES:

1. CROSS SECTION SHOWN IS THROUGH TEST PIT 1 AREA.
2. BACKFILL & PERIMETER FILL TO BE SANDY LOAM OR COARSER.
3. GRADE LAND AROUND DISPOSAL BED TO DIVERT ANY WATER FROM AREA.
4. REMOVE ANY ORGANIC LAYER & SCARIFY THE SOIL SURFACE BEFORE INSTALLING FILL.
5. REMOVE ALL LARGE STONES FROM AREA PROPOSED FOR DISPOSAL BED.
6. REQUIRED FILL DEPTHS MAY VARY FROM THOSE SHOWN DUE TO IRREGULARITIES IN SOIL SURFACE.
7. LOCATE TEST PITS ON THE LOT & POSITION BED OVER PITS AS SHOWN IN ABOVE PLAN.
8. REFER TO SECTIONS 11 & 12 IN SSWD RULES FOR FURTHER BED INSTALLATION DETAILS.

DISPOSAL AREA CROSS SECTION

Scale:
Vertical: 1 Inch = 10 Ft.
Horizontal: 1 Inch = 10 Ft.

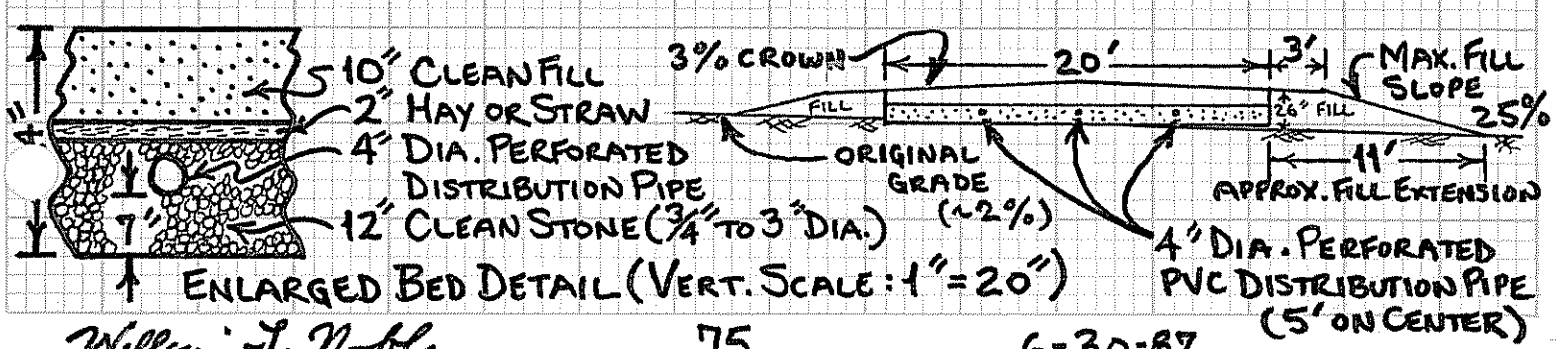

William J. Noble
Site Evaluator Signature

75
SE#

6-30-87
Date