Office copy

REPLACEMENT SYSTEM VARIANCE REQUEST

94-16

THE LIMITATIONS OF THE REPLACEMENT SYSTEM VARIANCE REQUEST

This form shall be attached to an application (HHE-200) for the proposed replacement system which requires a variance to the Rules. The LPI shall review the Replacement System Variance Request and HHE-200 and may approve the Request if all of the following requirements can be met, and the variance(s) requested fall within the limits of the LPI's authority.

1. The proposed design meets the definition of a Replacement System as defined in the Rules (Sec. 1903)
2. There will be no change in use of the structure except as authorized for one-time exempted expansions outside the shoreland zone of major waterbodies/courses.
3. The replacement system is determined by the Site Evaluator and LPI to be the most practical method to treat and dispose of the wastewater.
4. The BOD_5 plus S. S. content of the wastewater is no greater than that of normal domestic effluent.

GENERAL INFORMATION

Town of AUGUSTA

Permit No. 4898

Date Permit Issued 7/16/02

Property Owner's Name: FRANCIS HEALY

Tel. No.: 547-4958

System's Location: TOGUS STREAM ROAD AUGUSTA

Property Owner's Address: R1 BOX 901

(if different from above) BELGRADE, ME 04917

SPECIFIC INSTRUCTIONS TO THE:

LOCAL PLUMBING INSPECTOR (LPI):

If any of the variances exceed your approval authority and/or do not meet all the requirements listed under the Limitations Section above, then you are to send this Replacement System Variance Request, along with the Application, to the Department for review and approval consideration before issuing a Permit. (See reverse side for Comments Section and your signature.)

SITE EVALUATOR:

If after completing the Application, you find tha a variance for the proposed replacement system is needed, complete the Replacement System Variance Request with your signature on reverse side of form.

PROPERTY OWNER:

It has been determined by the Site Evaluator that a variance to the Rules is required for the proposed replacement system. This variance request is due to physical limitations of the site and/or soil conditions. Both the Site Evaluator and the LPI have considered the site/soil restrictions and have concluded that a replacement system in total compliance with the Rules is not possible.

PROPERTY OWNER:

I understand that the proposed system requires a variance to the Rules. Should the proposed system malfunction, I release all concerned provided they have performed their duties in a reasonable and proper manner, and I will promptly notify the Local Plumbing Inspector and make any corrections required by the Rules. By signing the variance request form, I acknowledge permission for representatives of the Department to enter onto the property to perform such duties as may be necessary to evaluate the variance request.

Francis P. Healy Jr. — SIGNATURE OF OWNER

6/20/02 — DATE

LOCAL PLUMBING INSPECTOR:

I, George H. Soucy Jr., the undersigned, have visited the above property and have determined to the best of my knowledge that it cannot be installed in compliance with the Rules. As a result of my review of the Replacement Variance Request, the Application, and my on-site investigation, I (check and complete either a or b):

☐ a. (☐approve, ☐disapprove) the variance request based on my authority to grant this variance. Note: If the LPI does not give his approval, he shall list his reasons for denial in Comments Section below and return to the Applicant. --OR--

☑ b. find that one or more of the requested Variances exceeds my approval authority as LPI. I (☐recommend, ☐do not recommend) the Department's approval of the variances. Note: If the LPI does not recommend the Department's approval, he/she shall state his/her reasons in Comments Section below as to why the proposed replacement system is not being recommended.

Comments

George H. Soucy Jr. — LPI SIGNATURE

6/26/02 — DATE

HHE-204 Rev 3/97

17'3" 21'2"

Replacement System Variance Request

VARIANCE CATEGORY	VARIANCE REQUESTED		LIMIT OF LPI'S APPROVAL AUTHORITY		VARIANCE REQUESTED TO:	
SOILS						
Soil Profile	Ground Water Table		to 7"		9 inches	
Soil Condition	Restrictive Layer		to 7"		inches	
from HHE-200	Bedrock		to 12"		inches	
SETBACK DISTANCES (in feet)	Disposal Fields		Septic Tanks		Disposal Fields	Septic Tanks
from	Less than 1000 gpd	1000 to 2000 gpd	Less than 1000 gpd	1000 to 2000 gpd	To	To
Wells with water usage of 2000 or more gpd	300[a] ft	300[a] ft	100[a] ft	100[a] ft		
Owner's wells	100 down to 60 ft	200 down to 100 ft	100[b] down to 50 ft	100 down to 50 ft	42'	+25'
Neighbor's wells	100[b] down to 60 ft	200[b] down to 120 ft	100[b] down to 50 ft	100[b] down to 75 ft		
Water supply line	10 ft[a]	20 ft[a]	10 ft[a]	10 ft[a]		
Water course, major - for replacements only, see Table 400.4 for exempted expansions	100 down to 60 ft	200 down to 120 ft	100 down to 50 ft	100 down to 50 ft	61'	+30'
Water course, minor	50 down to 25 ft	100 down to 50 ft	50 down to 25 ft	50 down to 25 ft		
Drainage ditches	25 down to 12 ft	50 down to 25 ft	25 down to 12 ft	25 down to 12 ft		
Coastal wetlands, special freshwater wetlands, great ponds, rivers, streams (edge of fill extension)	25 ft[d]	25 ft[d]	25 ft[d]	25 ft[d]		
Slopes greater than 3:1	10 ft	18 ft	N/A	N/A		
No full basement (e.g. slab, frost wall, columns)	15 down to 7 ft	30 down to 15 ft	8 down to 5 ft	14 down to 7 ft		
Full basement (below grade foundation)	20 down to 10 ft	30 down to 15 ft	8 down to 5 ft	14 down to 7 ft		
Property lines	10 down to 5[c] ft	18 ft down to 9[c] ft	10 ft down to 4[c] ft	10 ft down to 7[c] ft		
Burial sites or graveyards, measured from the downhill toe of the fill extension	25 ft	25 ft	25 ft	25 ft		

OTHER

1. Fill extension Grade - to 3:1
2.
3.

Footnotes:

a. This setback distance cannot be reduced by the LPI, but may be considered for reduction by State Variance.
b. Written Permission from the owner of a well is required when a replacement system will be located less than 100 (or 200 ft. for 1000-2000 gpd) feet and closer to that well than the system it is replacing.
c. Sufficient distance shall be maintained to assure that the toe of the fill does not extend to the 3:1 slope or property line.
d. Natural Resources Protection Act requires a 25 foot setback on slopes with less than 20% from the edge of disturbance and 100 feet on slopes greater than 20% except for the repair or installation of a replacement system when no practical alternative exists.

WILLIAM P BROWN William P Brown — SITE EVALUATOR'S SIGNATURE

6/4/2002 — DATE

FOR USE BY THE DEPARTMENT ONLY

The Department has reviewed the variance(s) and (☐ does ☐ does not) give its approval. Any additional requirements, recommendations, or reasons for the Variance denial, are given in the attached letter.

SIGNATURE OF THE DEPARTMENT — DATE

SUBSURFACE WASTEWATER DISPOSAL SYSTEM APPLICATION

Maine Department of Human Services
Division of Health Engineering, 10SHS
(207)287-5672 FAX (207)287-3165

PROPERTY LOCATION

>> CAUTION: PERMIT REQUIRED -- ATTACH IN SPACE BELOW <<

City, Town, or Plantation	AUGUSTA
Street or Road	TOGUS STREAM ROAD
Subdivision, Lot #	

AUGUSTA 4898 TOWN COPY
Date Permit Issued: 7/6/02 $ 120.00 ☐ Double Fee Charged
Local Plumbing Inspector Signature L.P.I. # 1 Pat

OWNER/APPLICANT INFORMATION

Name (last, first, MI): HEALY, FRANCIS ■ Owner ☐ Applicant

Mailing Address of Owner/Applicant: R 1 BOX 901
BELGRADE, ME 04917

Daytime Tel. # 547-4958

Municipal Tax Map # 94 Lot # 16

OWNER OR APPLICANT STATEMENT

I state that the information submitted is correct to the best of my knowledge and understand that any falsification is reason for the Department and/or Local Plumbing Inspector to deny a Permit.

Francis P Healy Jr 6/3/02
Signature of Owner/Applicant Date

CAUTION: INSPECTION REQUIRED

I have inspected the installation authorized above and found it to be in compliance with the Subsurface Wastewater Disposal Rules Application

Local Plumbing Inspector Signature (1st) Date Approved (2nd) Date Approved

PERMIT INFORMATION

TYPE OF APPLICATION

- ☐ 1. First Time System
- ■ 2. Replacement System
  - Type replaced TRENCH
  - Year installed 60'S
- ☐ 3. Expanded System
  - ☐ a. Minor Expansion
  - ☐ b. Major Expansion
- ☐ 4. Experimental System
- ☐ 5. Seasonal Conversion

THIS APPLICATION REQUIRES

- ☐ 1. No Rule Variance
- ☐ 2. First Time System Variance
  - ☐ a. Local Plumbing Inspector approval
  - ☐ b. State & Local Plumbing Inspector approval
- ■ 3. Replacement System Variance
  - ☐ a. Local Plumbing Inspector approval
  - ■ b. State & Local Plumbing Inspector approval
- ☐ 4. Minimum Lot Size Variance
- ☐ 5. Seasonal Conversion Permit

DISPOSAL SYSTEM COMPONENTS

- ■ 1. Complete Non-engineered System
- ☐ 2. Primitive System (graywater & alt. toilet)
- ☐ 3. Alternative Toilet, specify ____
- ☐ 4. Non-Engineered Treatment Tank (only)
- ☐ 5. Holding Tank, ____ gallons
- ☐ 6. Non-engineered Disposal Field (only)
- ☐ 7. Separated Laundry System
- ☐ 8. Complete Engineered System (2000 gpd or more)
- ☐ 9. Engineered Treatment Tank (only)
- ☐ 10. Engineered Disposal Field (only)
- ☐ 11. Pretreatment, specify: ____
- ☐ 12. Miscellaneous Components

SIZE OF PROPERTY

0.45 ☐ sq. ft. ■ acres

SHORELAND ZONING

■ Yes ☐ No

DISPOSAL SYSTEM TO SERVE:

- ■ 1. Single Family Dwelling Unit, No. of Bedrooms: 2
- ☐ 2. Multiple Family Dwelling Unit, No. of Units: ____
- ☐ 3. Other ____ (specify)

Current Use ☐ Seasonal ■ Year Round ☐ Undeveloped

TYPE OF WATER SUPPLY

■ 1. Drilled Well ☐ 2. Dug Well ☐ 3. Private ☐ 4. Public ☐ 5. Other

DESIGN DETAILS (SYSTEM LAYOUT SHOWN ON PAGE 3)

TREATMENT TANK

- ■ 1. Concrete
  - ☐ a. Regular
  - ■ b. Low Profile
- ☐ 2. Plastic
- ☐ 3. Other ____

CAPACITY 1000 GAL.

DISPOSAL FIELD TYPE & SIZE

- ☐ 1. Stone Bed ☐ 2. Stone Trench
- ■ 3. Proprietary Device
  - ☐ a. cluster array ■ c. Linear
  - ■ b. regular load ☐ d. H-20 load
- ☐ 4. Other ____

SIZE 900 ■ sq. ft. ☐ lin. ft.

GARBAGE DISPOSAL UNIT

■ 1. No ☐ 2. Yes ☐ 3. Maybe

If Yes or Maybe, specify one below:

- ☐ a. multi-compartment tank
- ☐ b. ____ tanks in series
- ☐ c. increase in tank capacity
- ☐ d. Filter on Tank Outlet

DESIGN FLOW

180 gallons per day

BASED ON:

- ■ 1. Table 501.1 (dwelling unit(s))
- ☐ 2. Table 501.2 (other facilities)

SHOW CALCULATIONS -for other facilities-

☐ 3. Section 503.0 (meter readings) ATTACH WATER METER DATA

SOIL DATA & DESIGN CLASS

PROFILE / CONDITION / DESIGN
9 / D / 3

at Observation Hole # TP-1

Depth 9 " of Most Limiting Soil Factor

DISPOSAL FIELD SIZING

1. ☐ Small - 2.0 sq. ft./gpd
2. ☐ Medium - 2.6 sq. ft./gpd
3. ■ Medium-Large - 3.3 sq. ft./gpd
4. ☐ Large - 4.1 sq. ft./gpd
5. ☐ Extra-Large - 5.0 sq. ft./gpd

EFFLUENT/EJECTOR PUMP

1. ☐ Not Required
2. ☐ May Be Required
3. ■ Required>> Specify only for engineered or experimental systems

DOSE gallons

SITE EVALUATOR'S STATEMENT

I certify that on 6/3/2002 (date) I completed a site evaluation on this property and state that the data reported are accurate and that the proposed system is in compliance with the State of Maine Subsurface Wastewater Disposal Rules (10-144A CMR 241).

William P Brown — Site Evaluator Signature
188 — SE#
6/4/2002 — Date
WILLIAM P BROWN — Site Evaluator Name Printed
293-2110 — Telephone #

Note: Changes to or deviations from the design should be confirmed with the Site Evaluator.

SUBSURFACE WASTEWATER DISPOSAL SYSTEM APPLICATION

Department of Human Services
Division of Health Engineering
(207) 287-5672 FAX 207 287-4172

Town, City, Plantation	Street, Road, Subdivision	Owners Name
AUGUSTA	TOGUS STREAM ROAD	FRANCIS HEALY

SITE PLAN

Scale 1" = 50 Ft.

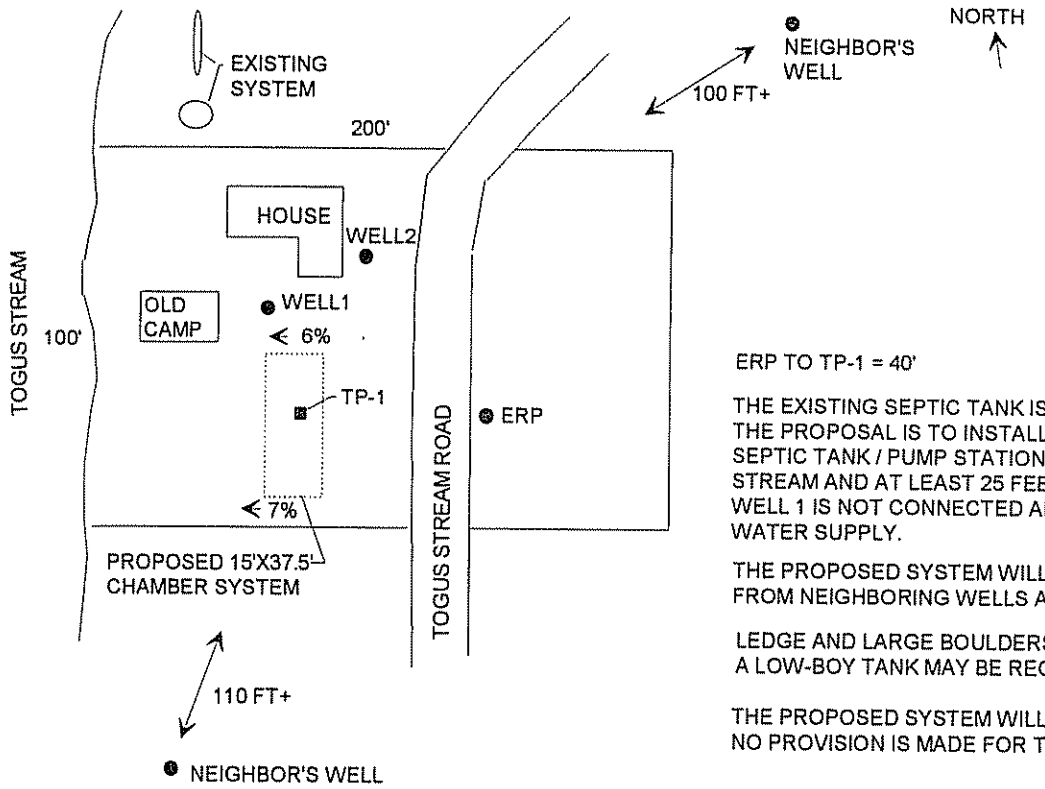

SITE LOCATION PLAN
(Map from Maine Atlas recommended)

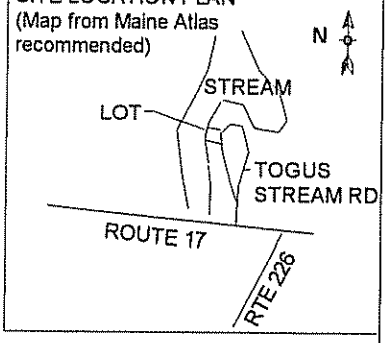

ERP TO TP-1 = 40'

THE EXISTING SEPTIC TANK IS ON NEIGHBORING PROPERTY
THE PROPOSAL IS TO INSTALL A NEW ONE-PIECE COMBINATION SEPTIC TANK / PUMP STATION AT LEAST 30 FEET FROM THE STREAM AND AT LEAST 25 FEET FROM THE OWNER'S WELL (WELL2)
WELL 1 IS NOT CONNECTED AND IS NOT USED AS A POTABLE WATER SUPPLY.

THE PROPOSED SYSTEM WILL BE GREATER THAN 100 FEET FROM NEIGHBORING WELLS AND 42 FEET FROM OWNER'S WELL 2.

LEDGE AND LARGE BOULDERS ARE EVIDENT IN THE AREA.
A LOW-BOY TANK MAY BE REQUIRED

THE PROPOSED SYSTEM WILL SERVE THE 2 BDRM HOUSE.
NO PROVISION IS MADE FOR THE OLD CAMP ON THE PROPERTY

SOIL DESCRIPTION AND CLASSIFICATION (Location of Observation Holes Shown Above)

Observation Hole TP-1 ■ Test Pit ☐ Boring

0 " Depth of Organic Horizon Above Mineral Soil

DEPTH BELOW MINERAL SOIL SURFACE (Inches)

Depth	Texture	Consistancy	Color	Mottling
0	SANDY LOAM	FRIABLE	MEDIUM BROWN	NONE
10	SILT CLAY LOAM	FIRM	OLIVE BRN	COMMON
20				
30				
40				
50				

Soil Classification		Slope	Limiting Factor	
9 Profile	D Condition	6-7 %	9 "	■ Ground Water ☐ Restrictive Layer ☐ Bedrock ☐ Pit Depth

Observation Hole _____ ☐ Test Pit ☐ Boring

_____ " Depth of Organic Horizon Above Mineral Soil

DEPTH BELOW MINERAL SOIL SURFACE (Inches)

Depth	Texture	Consistancy	Color	Mottling
0				
10				
20				
30				
40				
50				

Soil Classification		Slope	Limiting Factor	
Profile	Condition	%	"	☐ Ground Water ☐ Restrictive Layer ☐ Bedrock ☐ Pit Depth

WILLIAM P BROWN *William P Brown* 188 6/4/2002
Site Evaluator Signature SE # Date

SUBSURFACE WASTEWATER DISPOSAL SYSTEM APPLICATION

Division of Health Engineering
Department of Human Services

Town, City, Plantation	Street, Road, Subdivision	Owners Name
AUGUSTA	TOGUS STREAM ROAD	FRANCIS HEALY

SUBSURFACE WASTEWATER DISPOSAL PLAN

Scale 1" 20 Ft.

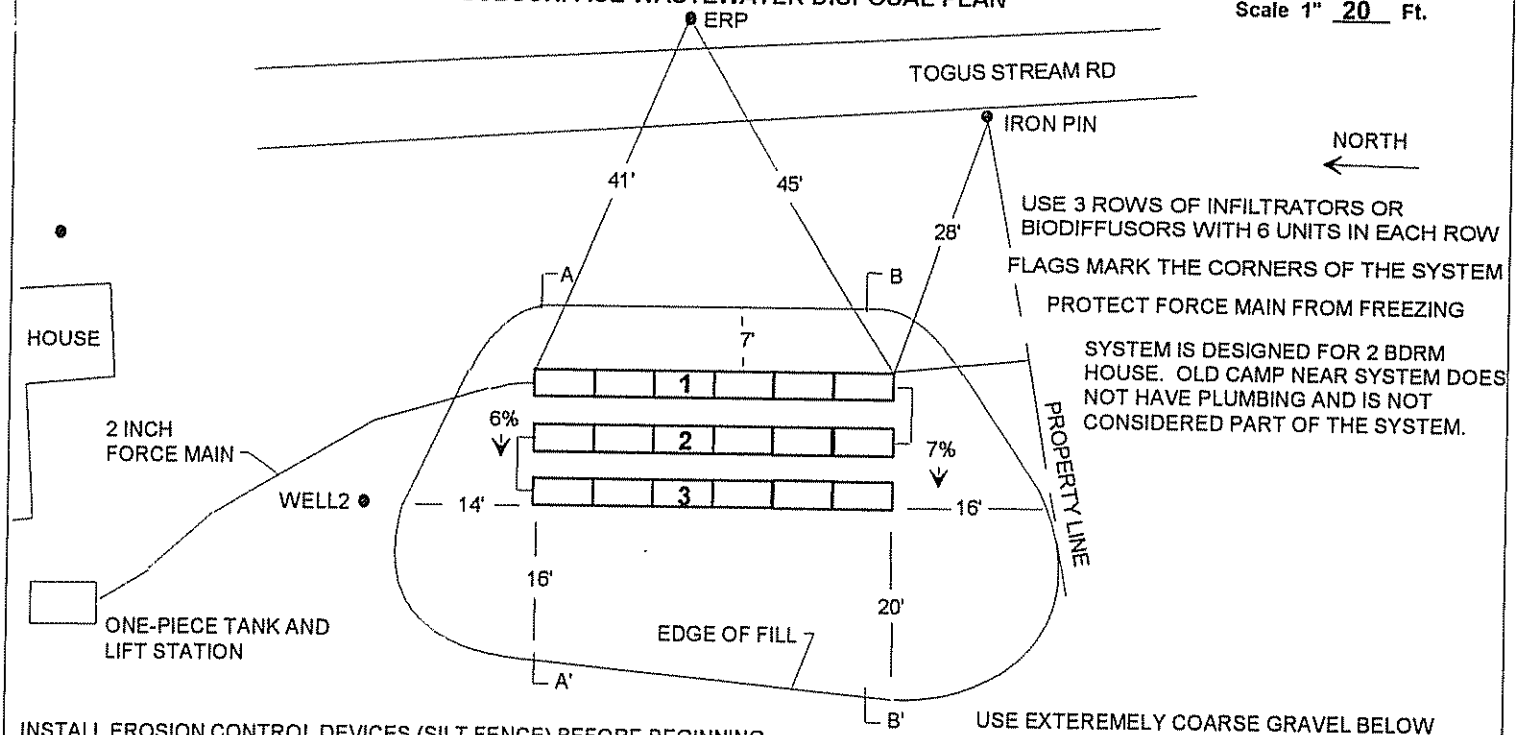

USE 3 ROWS OF INFILTRATORS OR BIODIFFUSORS WITH 6 UNITS IN EACH ROW

FLAGS MARK THE CORNERS OF THE SYSTEM

PROTECT FORCE MAIN FROM FREEZING

SYSTEM IS DESIGNED FOR 2 BDRM HOUSE. OLD CAMP NEAR SYSTEM DOES NOT HAVE PLUMBING AND IS NOT CONSIDERED PART OF THE SYSTEM.

INSTALL EROSION CONTROL DEVICES (SILT FENCE) BEFORE BEGINNING CONSTRUCTION OF THE SEPTIC SYSTEM AND SEPTIC TANK

INSTALL NEW ONE-PIECE COMBINATION SEPTIC TANK / LIFT STATION AT LEAST 30 FT FROM STREAM AND AT LEAST 25 FT FROM WELL. IF TWO-PIECE UNIT IS USED, CHECK WATER TIGHTNESS IN PRESENCE OF PLUMBING INSPECTOR.

PROPERLY ABANDON EXISTING SEPTIC TANK ON NEIGHBOR'S PROPERTY

USE EXTEREMELY COARSE GRAVEL BELOW PLASTIC CHAMBERS AND CRUSHED STONE OR EXTREMELY COARSE GRAVEL ON SIDES OF CHAMBERS

WELL1 IS 42 FT FROM DISPOSAL SYSTEM
WELL2 IS 16 FT FROM SYSTEM, IS NON-POTABLE ONLY AND IS NOT CURRENTLY CONNECTED TO HOUSE

FILL REQUIREMENTS

Depth of Fill (Upslope) 33-35"
Depth of Fill (Downslope) 35-41"

CONSTRUCTION ELEVATIONS

Reference Elevation is 00"
Bottom of Disposal Area SEE
Top of distribution Lines or Chambers BELOW

ELEVATION REFERENCE POINT LOCATION & DESCRIPTION

FLAGGED NAIL IN POWER POLE, 2 FEET ABOVE GROUND

DISPOSAL AREA CROSS SECTION

Scale:

Vertical: 1 inch = 5 Ft.
Horizontal: 1 inch = 10 Ft.

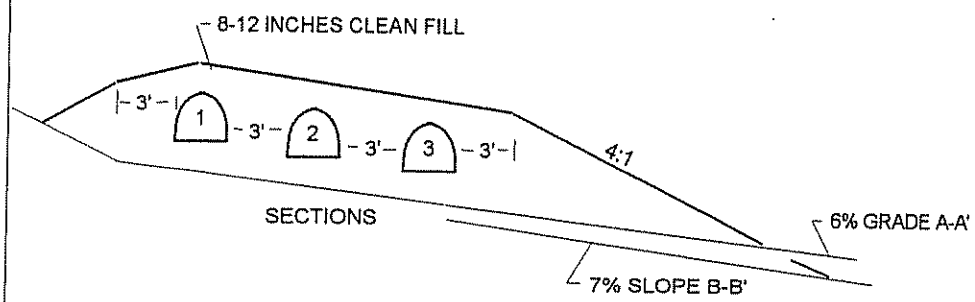

ROW	BOTTOM OF CHAMBER	TOP OF CHAMBER
1	-71"	-55"
2	-75"	-59"
3	-79"	-63"

INSTALL EROSION CONTROL DEVICES BEFORE BEGINNING CONSTRUCTION
REMOVE VEGETATION IN DISPOSAL AREA
SCARIFY SOIL UNDER THE ENTIRE FILL AREA
MIX 4 INCHES OF FILL MATERIAL WITH EXISTING SOIL TO FORM A TRANSITION ZONE (ACCORDING TO CHAPTER 8, PLUMBING CODE)
USE EXTREMELY COARSE GRAVEL UNDER SYSTEM
ALL FILL SHALL BE GRAVELLY COARSE SAND
SLOPE FINISH GRADE AS SHOWN OR ALL ONE-WAY
LOAM, SEED, MULCH

USE HIGH CAPACITY CHAMBERS THAT ARE 16 INCHES HIGH

INSTALL CRUSHED STONE OR EXTREMELY COARSE GRAVEL ALONG SIDES OF CHAMBERS

WILLIAM P BROWN	188	6/4/2002
Site Evaluator Signature	SE #	Date

HHE-200 Rev. 1/84

STATE OF MAINE
DEPARTMENT OF HUMAN SERVICES
DIVISION OF HEALTH ENGINEERING
10 STATE HOUSE STATION
AUGUSTA, MAINE
04333-0010

ANGUS S. KING, JR.
GOVERNOR

KEVIN W. CONCANNON
COMMISSIONER

July 11, 2002

Francis Healy
R 1 Box 901
Belgrade ME 04917

Subject: Approval, Replacement System Variance Request, Healy property, Togus Stream Road, Augusta

Dear Mr. Healy:

The Division has reviewed a Replacement System Variance Request for the subject property. The variance requested is to allow the installation of an onsite sewage disposal system with a setback distance reduction from the owner's well to the disposal field of 42 feet, septic tank of 25 feet and a major watercourse to the septic tank of 30 feet. Another variance required is a setback distance reduction from a major watercourse to the disposal field of 61 feet. The system design, prepared by William Brown, SE, dated June 4, 2002, is otherwise found to be in compliance with the Maine Subsurface Wastewater Disposal Rules.

We approve the requested variances with the following requirements:

1. A permit for system installation is to be obtained from the Local Plumbing Inspector in advance of the start of system construction.

2. The system is to be installed in accordance with the submitted and approved system design. Should alterations be required at the time of system installation, the system designer must be notified prior to making any changes.

3. The property owner shall complete the enclosed Well Setback Release Form and file it at the County Registry of Deeds, cross-referenced to the subject property's deed. A copy of the filed release, with Registry's stamp, shall be forwarded to this office to complete and validate the variance approval within 90 days of the date of this letter.

4. The variance approval is based only on the rules administered by this department. The approval of the variance request does not relieve the property owner from compliance with all other state and local requirements pertaining to the installation, use, and operation of the wastewater disposal system.

By accepting this approval and the associated plumbing permit, the owner agrees to comply fully with the conditions of approval and the Subsurface Wastewater Disposal Rules.

Because installation and owner maintenance has a significant effect on the working order of onsite sewage disposal systems, including their components, the Division makes no representation or guarantee as to the efficiency and/or operation of the system.

Should you or others have any questions regarding this review and/or approval, please feel free to contact me at 287-5687.

Sincerely,

Linda Robinson

Linda Robinson, Environmental Specialist II
Wastewater and Plumbing Control Program
Division of Health Engineering
E-mail: linda.robinson@state.me.us

/lsr
Enclosure: Well Setback Release Form
xc: File
George Soucy, LPI
William Brown, SE

Replacement System Variance Request

VARIANCE CATEGORY	VARIANCE REQUESTED		LIMIT OF LPI'S APPROVAL AUTHORITY		VARIANCE REQUESTED TO:	
SOILS						
Soil Profile	Ground Water Table		to 7"		9 inches	
Soil Condition	Restrictive Layer		to 7"		inches	
from HHE-200	Bedrock		to 12"		inches	
SETBACK DISTANCES (in feet)	Disposal Fields		Septic Tanks		Disposal Fields	Septic Tanks
from	Less than 1000 gpd	1000 to 2000 gpd	Less than 1000 gpd	1000 to 2000 gpd	To	To
Wells with water usage of 2000 or more gpd	300[a] ft	300[a] ft	100[a] ft	100[a] ft		
Owner's wells	100 down to 60 ft	200 down to 100 ft	100[b] down to 50 ft	100 down to 50 ft	42'	+25'
Neighbor's wells	100[b] down to 60 ft	200[b] down to 120 ft	100[b] down to 50 ft	100[b] down to 75 ft		
Water supply line	10 ft[a]	20 ft[a]	10 ft[a]	10 ft[a]		
Water course, major - for replacements only, see Table 400.4 for exempted expansions	100 down to 60 ft	200 down to 120 ft	100 down to 50 ft	100 down to 50 ft	61'	+30'
Water course, minor	50 down to 25 ft	100 down to 50 ft	50 down to 25 ft	50 down to 25 ft		
Drainage ditches	25 down to 12 ft	50 down to 25 ft	25 down to 12 ft	25 down to 12 ft		
Coastal wetlands, special freshwater wetlands, great ponds, rivers, streams (edge of fill extension)	25 ft[d]	25 ft[d]	25 ft[d]	25 ft[d]		
Slopes greater than 3:1	10 ft	18 ft	N/A	N/A		
No full basement (e.g. slab, frost wall, columns)	15 down to 7 ft	30 down to 15 ft	8 down to 5 ft	14 down to 7 ft		
Full basement (below grade foundation)	20 down to 10 ft	30 down to 15 ft	8 down to 5 ft	14 down to 7 ft		
Property lines	10 down to 5[c] ft	18 ft down to 9[c] ft	10 ft down to 4[c] ft	10 ft down to 7[c] ft		
Burial sites or graveyards, measured from the downhill toe of the fill extension	25 ft	25 ft	25 ft	25 ft		

OTHER

1. Fill extension Grade - to 3:1
2.
3.

Footnotes:

a. This setback distance cannot be reduced by the LPI, but may be considered for reduction by State Variance.
b. Written Permission from the owner of a well is required when a replacement system will be located less than 100 (or 200 ft. for 1000-2000 gpd) feet and closer to that well than the system it is replacing.
c. Sufficient distance shall be maintained to assure that the toe of the fill does not extend to the 3:1 slope or property line.
d. Natural Resources Protection Act requires a 25 foot setback on slopes with less than 20% from the edge of disturbance and 100 feet on slopes greater than 20% except for the repair or installation of a replacement system when no practical alternative exists.

WILLIAM P BROWN *William P Brown* — SITE EVALUATOR'S SIGNATURE

6/4/2002 — DATE

FOR USE BY THE DEPARTMENT ONLY

The Department has reviewed the variance(s) and (☑ does ☐ does not) give its approval. Any additional requirements, recommendations, or reasons for the Variance ~~denial~~, are given in the attached letter.

Linda Robinson — SIGNATURE OF THE DEPARTMENT

7/11/02 — DATE

REPLACEMENT SYSTEM VARIANCE REQUEST

THE LIMITATIONS OF THE REPLACEMENT SYSTEM VARIANCE REQUEST

This form shall be attached to an application (HHE-200) for the proposed replacement system which requires a variance to the Rules. The LPI shall review the Replacement System Variance Request and HHE-200 and may approve the Request if all of the following requirements can be met, and the variance(s) requested fall within the limits of the LPI's authority.

1. The proposed design meets the definition of a Replacement System as defined in the Rules (Sec. 1903)
2. There will be no change in use of the structure except as authorized for one-time exempted expansions outside the shoreland zone of major waterbodies/courses.
3. The replacement system is determined by the Site Evaluator and LPI to be the most practical method to treat and dispose of the wastewater.
4. The BOD_5 plus S. S. content of the wastewater is no greater than that of normal domestic effluent.

GENERAL INFORMATION

Town of AUGUSTA

Permit No. _____ Date Permit Issued _____

Property Owner's Name: FRANCIS HEALY Tel. No.: 547-4958

System's Location: TOGUS STREAM ROAD AUGUSTA

Property Owner's Address: R1 BOX 901

(if different from above) BELGRADE, ME 04917

SPECIFIC INSTRUCTIONS TO THE:

LOCAL PLUMBING INSPECTOR (LPI):

If any of the variances exceed your approval authority and/or do not meet all the requirements listed under the Limitations Section above, then you are to send this Replacement System Variance Request, along with the Application, to the Department for review and approval consideration before issuing a Permit. (See reverse side for Comments Section and your signature.)

SITE EVALUATOR:

If after completing the Application, you find tha a variance for the proposed replacement system is needed, complete the Replacement System Variance Request with your signature on reverse side of form.

PROPERTY OWNER:

It has been determined by the Site Evaluator that a variance to the Rules is required for the proposed replacement system. This variance request is due to physical limitations of the site and/or soil conditions. Both the Site Evaluator and the LPI have considered the site/soil restrictions and have concluded that a replacement system in total compliance with the Rules is not possible.

PROPERTY OWNER:

I understand that the proposed system requires a variance to the Rules. Should the proposed system malfunction, I release all concerned provided they have performed their duties in a reasonable and proper manner, and I will promptly notify the Local Plumbing Inspector and make any corrections required by the Rules. By signing the variance request form, I acknowledge permission for representatives of the Department to enter onto the property to perform such duties as may be necessary to evaluate the variance request.

Francis P Healy Jr 4/20/02

SIGNATURE OF OWNER DATE

LOCAL PLUMBING INSPECTOR:

I, George A. Soucy Jr., the undersigned, have visited the above property and have determined to the best of my knowledge that it cannot be installed in compliance with the Rules. As a result of my review of the Replacement Variance Request, the Application, and my on-site investigation, I (check and complete either a or b):

☐ a. (☐approve, ☐disapprove) the variance request based on my authority to grant this variance. Note: If the LPI does not give his approval, he shall list his reasons for denial in Comments Section below and return to the Applicant. --OR--

☑ b. find that one or more of the requested Variances exceeds my approval authority as LPI. I (☐recommend, ☐do not recommend) the Department's approval of the variances. Note: If the LPI does not recommend the Department's approval, he/she shall state his/her reasons in Comments Section below as to why the proposed replacement system is not being recommended.

Comments _____

George A. Soucy Jr 6/26/02

LPI SIGNATURE DATE

HHE-204 Rev 3/97

STATE OF MAINE
DEPARTMENT OF HUMAN SERVICES
DIVISION OF HEALTH ENGINEERING
10 STATE HOUSE STATION
AUGUSTA, MAINE
04333-0010

ANGUS S. KING, JR.
GOVERNOR

KEVIN W. CONCANNON
COMMISSIONER

021443

WELL SETBACK RELEASE FORM

We, the undersigned, are the owner(s) of the well and/or property herein described. We have read and understand the following information concerning the proposed separation distance between our well and the subsurface waste water disposal system for which a variance is being requested. We are prepared to accept any risk that the subsurface waste water disposal system may pose to our well.

All wells should be located a safe distance from all possible sources of contamination; in this case a subsurface waste water disposal system. The Maine Subsurface Waste Water Disposal Rules require a minimum of 100 feet between a <1000 gpd disposal system and a well; 200 feet between a 1000-2000 gpd disposal system and a well; and 300 feet between a >2000 gpd disposal system and a well. **(Please circle the appropriate category.)**

Since the safety of a well primarily depends on considerations of good well construction, geology and adequate maintenance of the subsurface waste water disposal system, the best means of protecting the well water quality is to maintain the maximum distance between a well and a disposal system. The Department of Human Services suggests that a maximum setback distance should be maintained.

The separation distance between our well and the subsurface wastewater disposal system for which this well release approval is requested is:

component well / 42 feet.
component Septic tank / 25 feet

Address of Property with Disposal System:
(Include Municipal Book & Page No. or Map & Lot No.) Book 6871 Pg 233

Owner(s) of Property with Disposal System: Francis P Healy JR

Address of Property with Well:
(Include Municipal Book & Page No. or Map & Lot No.)

Owner(s) of Property with Well: Francis P Healy JR

RR 1 Box 4901
Belgrade, Me 04917
582-4958
547-4958

We, the undersigned, release the site evaluator, well driller, the municipality and the State of Maine from liability should our well become contaminated. (Note: If the subject well has more than one owner, all well owner signatures must appear on this document.)

Well Owner(s) Signature Francis P Healy Jr Date 7/16/02

Date

* *

State of Maine

County of Kennebec, ss Date 7/16/02

Then personally appeared the above named Francis P. Healy, Jr. (and) and (severally) acknowledged the foregoing instrument to be his (or their) free act and deed.

SEAL

Before me, Josee M. Barter
Justice of the Peace or Notary Public
JOSEE M. BARTER
NOTARY PUBLIC, MAINE
MY COMMISSION EXPIRES MARCH 10, 2005

RECEIVED KENNEBEC SS.
2002 JUL 18 PM 1:12

ATTEST: Beverly Bustin-Hatheway
REGISTER OF DEEDS

OFF[illegible]OL STREET TTY (207) 287-2070 FAX: (207) 287-4172

HHE-306 Rev 4/99