SUBSURFACE WASTEWATER DISPOSAL SYSTEM APPLICATION

Department of Human Services
Division of Health Engineering
(207) 289-3826

M83L5C

AUGUSTA PERMIT # 202 ✓ TOWN COPY

Date Permit Issued: 4 23 84

$ 40 FEE ☐ If Double Charged

Robert St Pierre
Local Plumbing Inspector Signature

L.P.I. # 1617

PROPERTY ADDRESS

Town Or Plantation	Augusta
Street vision Lot #	Leighton Road

PROPERTY OWNERS NAME

Last: Shostak Construction Corp.

Applicant Name:	R.F.D. # 2
Mailing Address of Owner/Applicant (If Different)	Augusta, Maine 04330

Owner/Applicant Statement

I certify that the Information submitted is correct to the best of my knowledge and understand that any falsification is reason for the Local Plumbing Inspector to deny a Permit.

[illegible] VP 4-15-84

Signature of Owner/Applicant — Date

Caution: Inspection Required

I have inspected the installation authorized above and found it to be in compliance with the Subsurface Wastewater Disposal Rules.

Local Plumbing Inspector Signature — Date Approved

PERMIT INFORMATION

THIS APPLICATION IS FOR:

1. ☒ NEW SYSTEM
2. ☐ REPLACEMENT SYSTEM
3. ☐ EXPANDED SYSTEM
4. ☐ SEASONAL CONVERSION
5. ☐ EXPERIMENTAL SYSTEM

THIS APPLICATION REQUIRES:

1. ☒ NO RULE VARIANCE REQUIRED
2. ☐ NEW SYSTEM VARIANCE Attach New System Variance Form
   ☐ REPLACEMENT SYSTEM VARIANCE Attach Replacement System Variance Form
   3. ☐ Requires only Local Plumbing Inspector Approval
   4. ☐ Requires both State and Local Plumbing Inspector Approval

INSTALLATION IS

COMPLETE SYSTEM

1. ☒ NON-ENGINEERED SYSTEM
2. ☐ PRIMITIVE SYSTEM (Includes Alternative Toilet)
3. ☐ ENGINEERED (+2000 gpd)

INDIVIDUALLY INSTALLED COMPONENTS:

4. ☐ TREATMENT TANK (ONLY)
5. ☐ HOLDING TANK
6. ☐ ALTERNATIVE TOILET (ONLY)
7. ☐ NON-ENGINEERED DISPOSAL AREA (ONLY)
8. ☐ ENGINEERED DISPOSAL AREA (ONLY)
9. ☐ SEPARATED LAUNDRY SYSTEM

IF REPLACEMENT SYSTEM:

YEAR FAILING SYSTEM INSTALLED _____

THE FAILING SYSTEM IS: NA

1. ☐ BED 3. ☐ TRENCH
2. ☐ CHAMBER 4. ☐ OTHER: _____

DISPOSAL SYSTEM TO SERVE:

1. ☐ SINGLE FAMILY DWELLING
2. ☐ MODULAR OR MOBILE HOME
3. ☐ MULTIPLE FAMILY DWELLING
4. ☒ OTHER Warehouse & Office (SPECIFY)

SIZE OF PROPERTY: 1 ± Ac.

ZONING: Commercial

TYPE OF WATER SUPPLY: City Water

DESIGN DETAILS (SYSTEM LAYOUT SHOWN ON PAGE 3)

TREATMENT TANK

1. ☒ SEPTIC: ☒ Regular ☐ Low Profile
2. ☐ AEROBIC

SIZE: 1000 GALS.

WATER CONSERVATION

1. ☒ NONE
2. ☐ LOW VOLUME TOILET
3. ☐ SEPARATED LAUNDRY SYSTEM
4. ☐ ALTERNATIVE TOILET

SPECIFY: _____

PUMPING

1. ☐ NOT REQUIRED
2. ☐ MAY BE REQUIRED (DEPENDING ON TREATMENT TANK LOCATION AND ELEVATION)
3. ☒ REQUIRED

DOSE: 55 GALS.

CRITERIA USED FOR DESIGN FLOW (BEDROOMS, SEATING, EMPLOYEES, WATER RECORDS, ETC.)

9 employees @ 15 gpd.

DESIGN FLOW: 135 (GALLONS/DAY)

SOIL CONDITIONS USED FOR DESIGN PURPOSES

PROFILE	CONDITION
8	C

DEPTH TO LIMITING FACTOR: 18

SIZE RATINGS USED FOR DESIGN PURPOSES

1. ☐ SMALL
2. ☐ MEDIUM
3. ☐ MEDIUM-LARGE
4. ☒ LARGE
5. ☐ EXTRA LARGE

DISPOSAL AREA TYPE/SIZE

1. ☒ BED 600 Sq. Ft.
2. ☐ CHAMBER _____ Sq. Ft.
   ☐ REGULAR ☐ H-20
3. ☐ TRENCH _____ Linear Ft.
4. ☐ OTHER: _____

20' X 30'

SITE EVALUATOR STATEMENT

☐ SITE EVALUATION WAIVED BY LOCAL OPTION

On April 12, 1984 (date) I conducted a site evaluation for this project and certify that the data reported is accurate. The system I propose is in accordance with the Subsurface Wastewater Disposal Rules.

Stephen E. Goodwin — Evaluator or Professional Engineer's Signature

65 — SE# / PE#

4/12/84 — Date

* Local Plumbing Inspectors Signature if a Local Site Evaluation Waiver under a Local Option

City

SUBSURFACE WASTEWATER DISPOSAL SYSTEM APPLICATION

Department of Human Services
Division of Health Engineering

Town, City, Plantation: Augusta

Street, Road, Subdivision: Leighton Road

Owners Name: Shostak Construction Corp.

SITE PLAN

Scale 1" = 100 Ft.

SITE LOCATION PLAN (Attach Map from Maine Atlas for New System Variance)

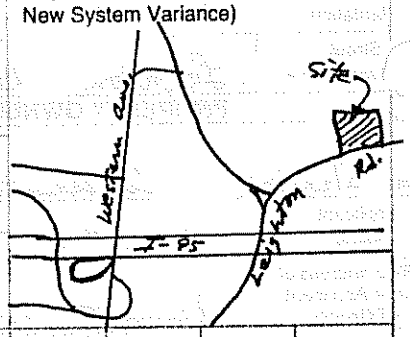

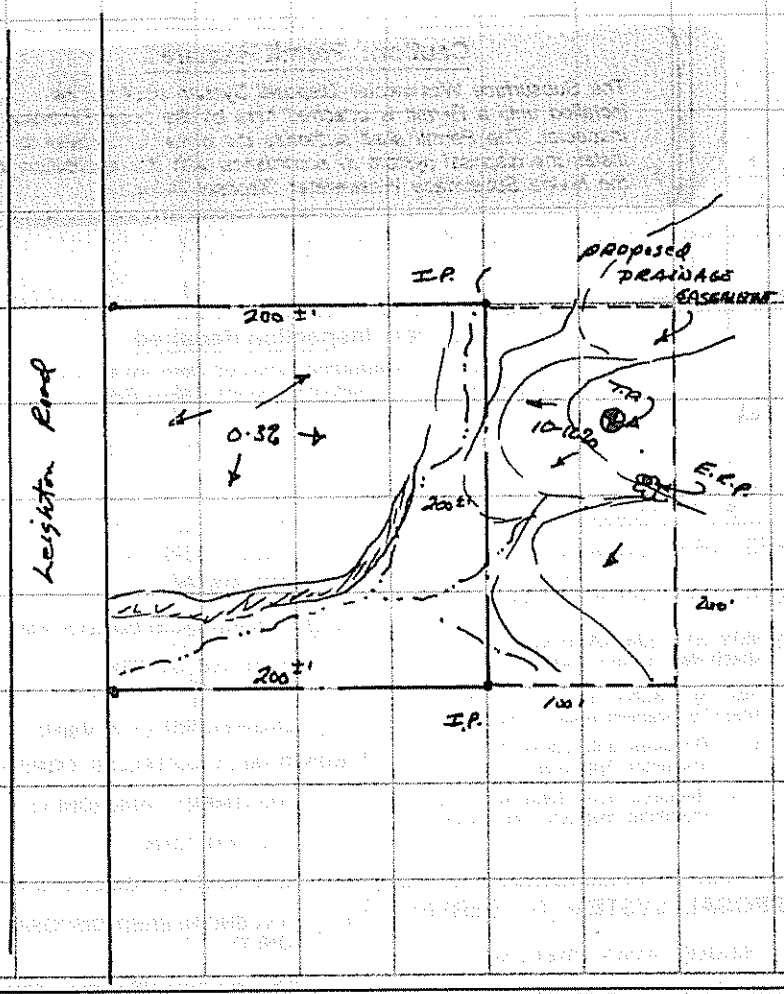

SOIL DESCRIPTION AND CLASSIFICATION (Location of Observation Holes Shown Above)

Observation Hole _____ ☒ Test Pit ☐ Boring

0" Depth of Organic Horizon Above Mineral Soil

DEPTH BELOW MINERAL SOIL SURFACE (Inches): 0, 6, 10, 15, 20, 30, 40, 50

Texture	Consistency	Color	Mottling
Loam		Brown	
fine sandy loam to sandy silts	friable	Reddish yellowish Brown to olive gray	mottling
	somewhat firm		

Soil (Profile)	Classification (Condition)	Slope	Limiting Factor	
8	C	10-12%	18"	☒ Ground Water ☒ Restrictive Layer ☐ Bedrock

Observation Hole _____ ☐ Test Pit ☐ Boring

_____ " Depth of Organic Horizon Above Mineral Soil

DEPTH BELOW MINERAL SOIL SURFACE (Inches): 0, 6, 10, 15, 20, 30, 40, 50

Texture	Consistency	Color	Mottling

Soil (Profile)	Classification (Condition)	Slope	Limiting Factor	
		%		☐ Ground Water ☐ Restrictive Layer ☐ Bedrock

Stephen E. Goodwin
Site Evaluator or Professional Engineer's Signature

65
SE# / PE#

4/12/84
Date

SUBSURFACE WASTEWATER DISPOSAL SYSTEM APPLICATION

Department of Human Services
Division of Health Engineering

Town, City, Plantation	Street, Road, Subdivision	Owners Name
Augusta	Leighton Road	Shostak Construction Corp.

SUBSURFACE WASTEWATER DISPOSAL PLAN

Scale 1" = 20 Ft.

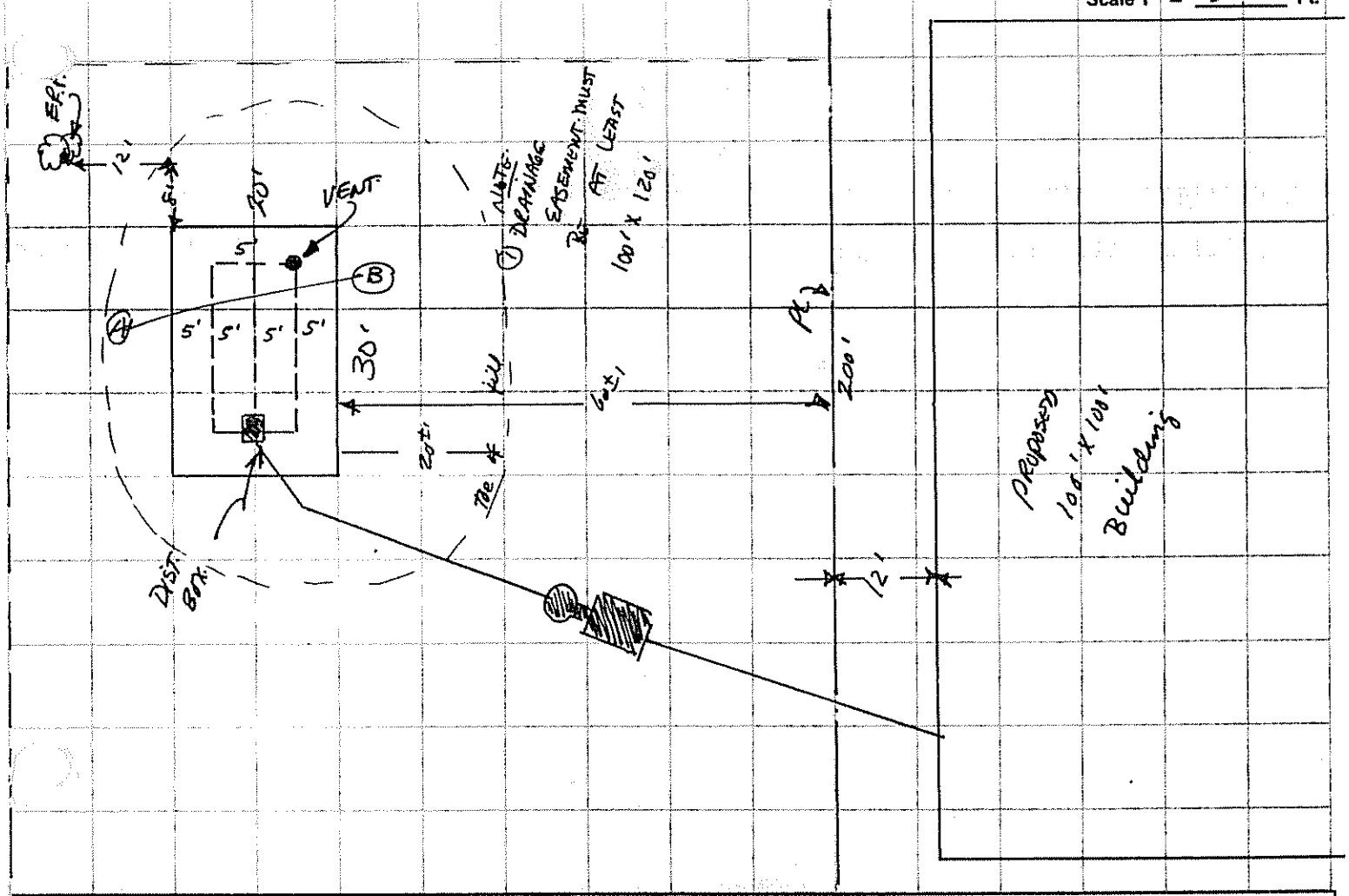

FILL REQUIREMENTS		CONSTRUCTION ELEVATIONS	ELEVATION REFERENCE POINT LOCATION & DESCRIPTION
Depth of Fill (Upslope)	18"	Reference Elevation is nail in tree	nail in 4" Beech tree -
Depth of Fill (Downslope)	46"	Bottom of Disposal Area 40" Below "	Finished grade 16" Below nail
		Top of Distribution Lines or Chambers 28" Below"	

DISPOSAL AREA CROSS SECTION

Scale:
Vertical: 1 Inch = 5' Ft.
Horizontal: 1 Inch = 5' Ft.

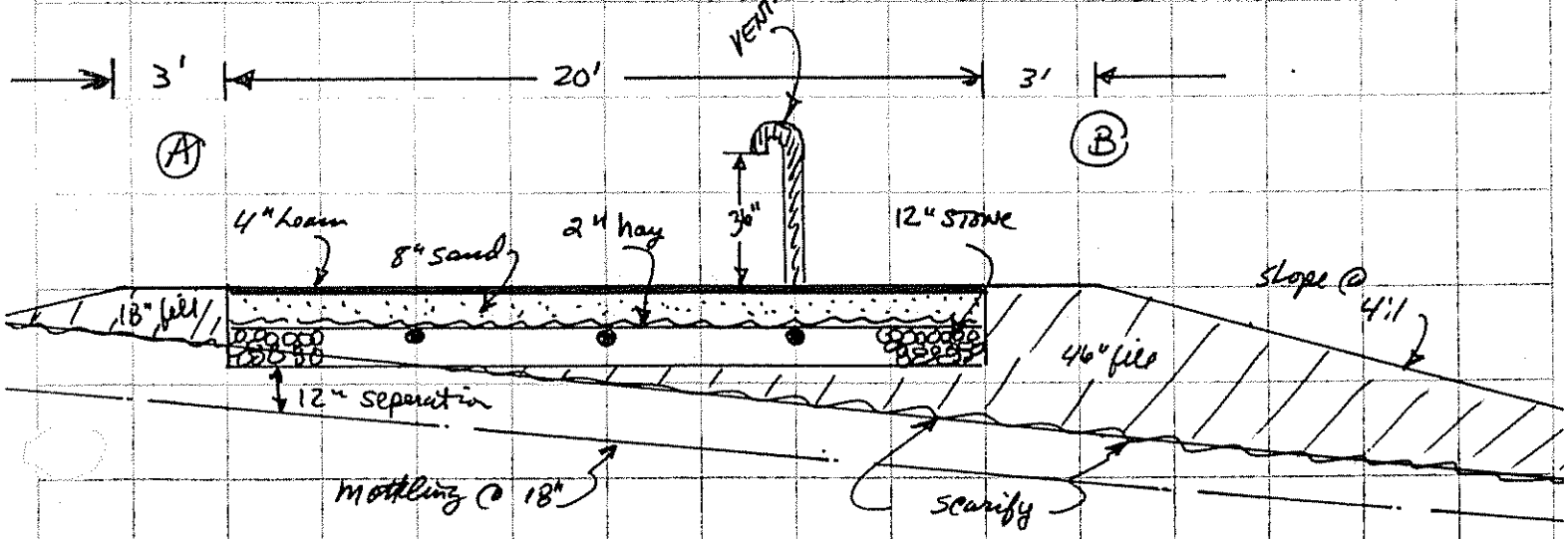

Stephen E. Goodwin
Site Evaluator or Professional Engineer's Signature

65
SE # / PE #

4/12/84
Date