SUBSURFACE WASTEWATER DISPOSAL SYSTEM APPLICATION

Department of Human Services
Division of Health Engineering
(207) 289-3826

M80 L16

AUGUSTA PERMIT # 794 TOWN COPY

Date Permit Issued: 7/17/86 $ 400.00 FEE ☐ If Double Fee Charged

Local Plumbing Inspector Signature L.P.I. # 80 P

PROPERTY ADDRESS

Town Or Plantation	Augusta
Street Subdivision Lot #	Old Belgrade Rd

PROPERTY OWNERS NAME

Last: Gagne First: Georgie

Applicant Name:	(Same)
Mailing Address of Owner/Applicant (If Different)	RFD 3 Box 784 Augusta, Me. 04330

Owner/Applicant Statement

I certify that the information submitted is correct to the best of my knowledge and understand that any falsification is reason for the Local Plumbing Inspector to deny a Permit.

X Georgie Gagne
Signature of Owner/Applicant Date

Caution: Inspection Required

I have inspected the installation authorized above and found it to be in compliance with the Subsurface Wastewater Disposal Rules.

Local Plumbing Inspector Signature 8/19/86
Date Approved

PERMIT INFORMATION

THIS APPLICATION IS FOR:

1. ☑ NEW SYSTEM
2. ☐ REPLACEMENT SYSTEM
3. ☐ EXPANDED SYSTEM
4. ☐ SEASONAL CONVERSION
5. ☐ EXPERIMENTAL SYSTEM

THIS APPLICATION REQUIRES:

1. ☑ NO RULE VARIANCE REQUIRED
2. ☐ NEW SYSTEM VARIANCE Attach New System Variance Form
   ☐ REPLACEMENT SYSTEM VARIANCE Attach Replacement System Variance Form
3. ☐ Requiring Local Plumbing Inspector Approval
4. ☐ Requires State and Local Plumbing Inspector Approval

INSTALLATION IS:

COMPLETE SYSTEM

1. ☑ NON-ENGINEERED SYSTEM
2. ☐ PRIMITIVE SYSTEM (Includes Alternative Toilet)
3. ☐ ENGINEERED (+2000 gpd)

INDIVIDUALLY INSTALLED COMPONENTS:

4. ☐ TREATMENT TANK (ONLY)
5. ☐ HOLDING TANK
6. ☐ ALTERNATIVE TOILET (ONLY)
7. ☐ NON-ENGINEERED DISPOSAL AREA (ONLY)
8. ☐ ENGINEERED DISPOSAL AREA (ONLY)
9. ☐ SEPARATED LAUNDRY SYSTEM

IF REPLACEMENT SYSTEM:

YEAR FAILING SYSTEM INSTALLED _____

THE FAILING SYSTEM IS:

1. ☐ BED 3. ☐ TRENCH
2. ☐ CHAMBER 4. ☐ OTHER: _____

DISPOSAL SYSTEM TO SERVE:

1. ☐ SINGLE FAMILY DWELLING
2. ☑ MODULAR OR MOBILE HOME
3. ☐ MULTIPLE FAMILY DWELLING
4. ☐ OTHER _____ SPECIFY

SIZE OF PROPERTY	ZONING
40,675 Ac	Rural

TYPE OF WATER SUPPLY

Drilled Well

DESIGN DETAILS (SYSTEM LAYOUT SHOWN ON PAGE 3)

TREATMENT TANK

1. ☑ SEPTIC: ☑ Regular ☐ Low Profile
2. ☐ AEROBIC

SIZE: 1000 GALS.

WATER CONSERVATION

1. ☑ NONE
2. ☐ LOW VOLUME TOILET
3. ☐ SEPARATED LAUNDRY SYSTEM
4. ☐ ALTERNATIVE TOILET

SPECIFY: _____

PUMPING

1. ☐ NOT REQUIRED
2. ☑ MAY BE REQUIRED (DEPENDING ON TREATMENT TANK LOCATION AND ELEVATION)
3. ☐ REQUIRED

DOSE: 100 GALS.

CRITERIA USED FOR DESIGN FLOW (BEDROOMS, SEATING, EMPLOYEES, WATER RECORDS, ETC.)

2 Bed Min.
= 180 gpd

372 ÷ 1.7 = 219

DESIGN FLOW: 219 (GALLONS/DAY)

SOIL CONDITIONS USED FOR DESIGN PURPOSES

PROFILE	CONDITION
7	C

DEPTH TO LIMITING FACTOR: 27.

SIZE RATINGS USED FOR DESIGN PURPOSES

1. ☐ SMALL
2. ☐ MEDIUM
3. ☐ MEDIUM-LARGE
4. ☑ LARGE
5. ☐ EXTRA LARGE

DISPOSAL AREA TYPE/SIZE

1. ☐ BED _____ Sq. Ft.
2. ☑ CHAMBER 372 Sq. Ft.
   ☑ REGULAR ☐ H-20
3. ☐ TRENCH _____ Linear Ft.
4. ☐ OTHER: _____

SITE EVALUATOR STATEMENT

(☐ SITE EVALUATION WAIVED BY LOCAL OPTION)

On 7/14/86 (date) I conducted a site evaluation for this project and certify that the data reported is accurate. The system I propose is in accordance with the Subsurface Wastewater Disposal Rules.

Hanson Buchan
Site Evaluator Signature

201
SE#

7/15/86
Date

* Local Plumbing Inspectors Signature if a Local Site Evaluation Waiver under a Local Option

SUBSURFACE WASTEWATER DISPOSAL SYSTEM APPLICATION

Department of Human Services
Division of Health Engineering

Town, City, Plantation	Street, Road, Subdivision	Owners Name
Augusta	Old Belgrade Road	Georgia Gagne

SITE PLAN

Scale 1" = 50' Ft.

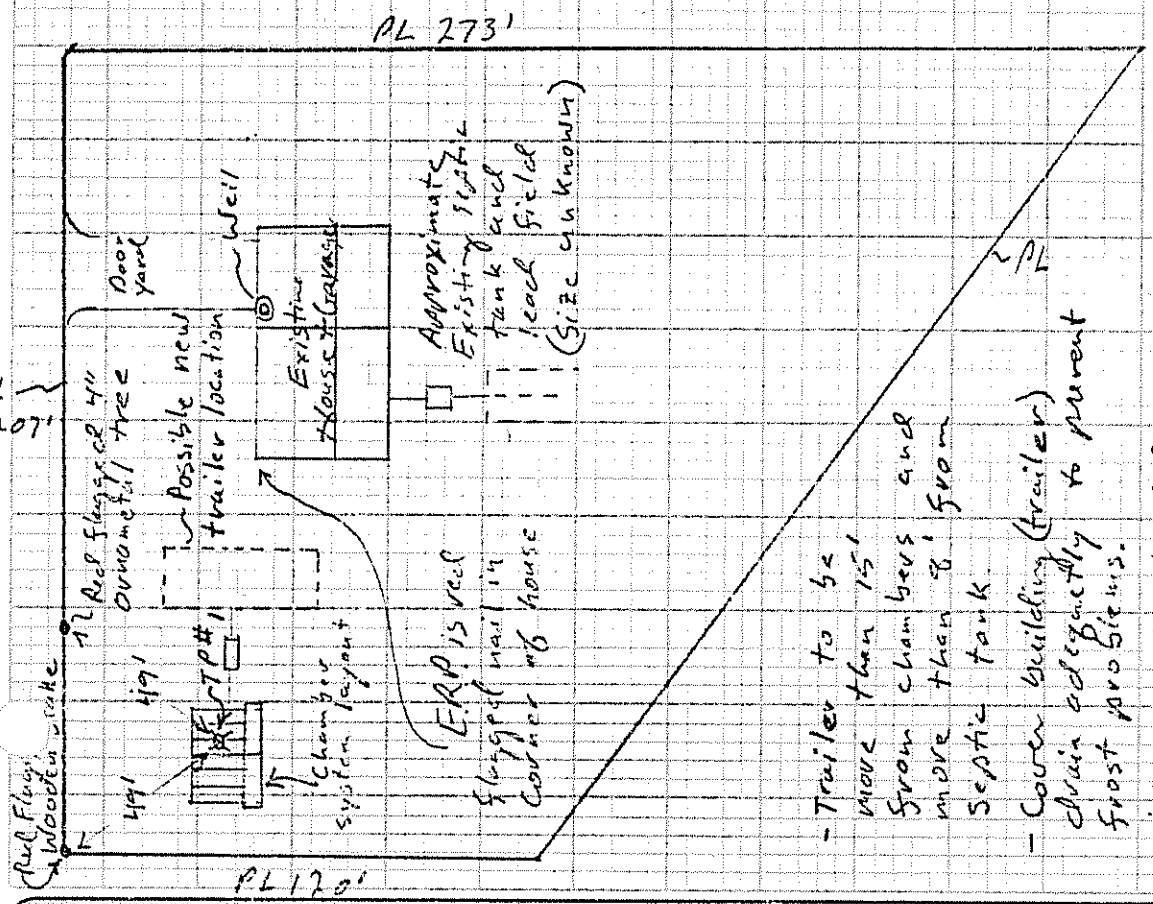

- Trailer to be more than 15' from chambers and more than 8' from septic tank.
- Cover building (trailer) drain adequately to prevent frost problems.
- Chambers are located 100' or more from owners and neighbors wells. However the septic tank is approximately 85' from owners well and must be tested for water tightness in the presence of the L.P.I.

SITE LOCATION PLAN (Attach Map from Maine Atlas for New System Variance)

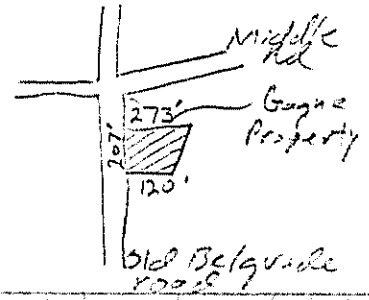

SOIL DESCRIPTION AND CLASSIFICATION (Location of Observation Holes Shown Above)

Observation Hole 1 ☑ Test Pit ☐ Boring

2 " Depth of Organic Horizon Above Mineral Soil

DEPTH BELOW MINERAL SOIL SURFACE (Inches)

Depth	Texture	Consistency	Color	Mottling
0	Sandy Loam	Loose	Dk Br.	
6	Sandy Loam	Loose	Y. Br	
10	V.F. Sand	V. Friable	Yellow	
15	F. Sand	Friable	lt. yellow	
20	Med. Sand	Friable	Sand	
30	Sandy loam	Firm	Grey	Mottling
	Silt loam	Firm	Grey	
40		Bottom of Pit		
50				

Soil	Classification	Slope	Limiting Factor	
7 (Profile)	C (Condition)	2 %	27"	☑ Ground Water ☑ Restrictive Layer ☐ Bedrock

Observation Hole _____ ☐ Test Pit ☐ Boring

_____ " Depth of Organic Horizon Above Mineral Soil

DEPTH BELOW MINERAL SOIL SURFACE (Inches)

Depth	Texture	Consistency	Color	Mottling
0				
6				
10				
15				
20				
30				
40				
50				

Soil	Classification	Slope	Limiting Factor	
(Profile)	(Condition)	%		☐ Ground Water ☐ Restrictive Layer ☐ Bedrock

Site Evaluator Signature: [signature]

SE#: 201

Date: 7/15/86

HHE 200 — Rev 1/84

SUBSURFACE WASTEWATER DISPOSAL SYSTEM APPLICATION

Department of Human Services
Division of Health Engineering

Town, City, Plantation	Street, Road, Subdivision	Owners Name
Augusta	Old Belgrade Rd.	Georgia Gogue

SUBSURFACE WASTEWATER DISPOSAL PLAN

Scale 1" = 10 Ft.

All construction to be in accordance with state of Maine plumbing code

- Install chambers to manufacturers specifications at location and layout as shown

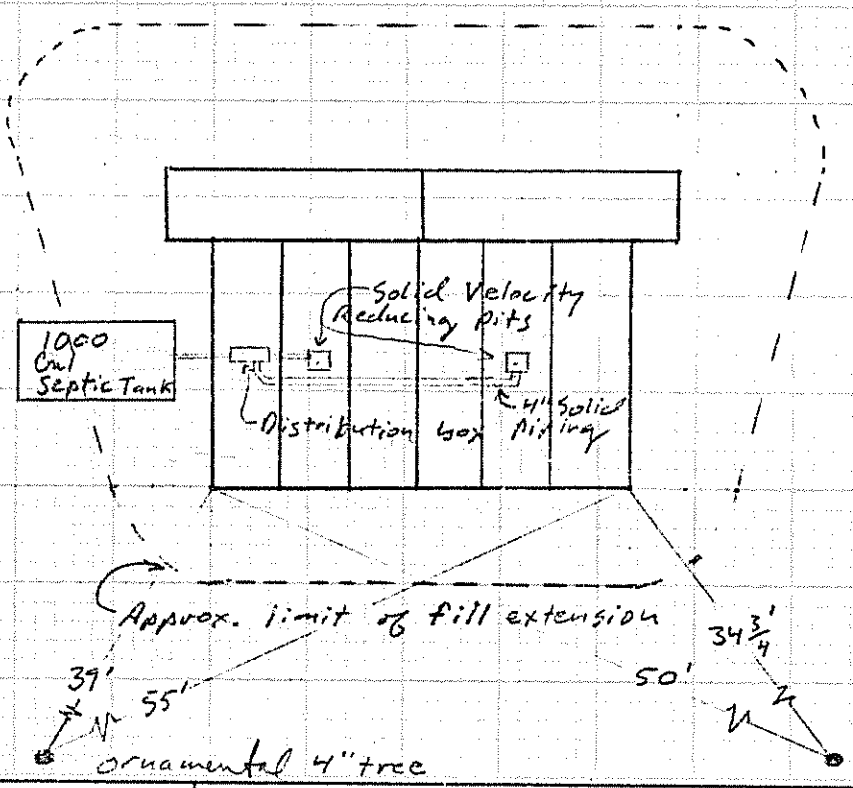

- provide diversion to keep runoff from accumulating behind high side of system.
- 8 13' X 3.5' chambers are required as shown

FILL REQUIREMENTS		CONSTRUCTION ELEVATIONS		ELEVATION REFERENCE POINT LOCATION & DESCRIPTION
Depth of Fill (Upslope)	7"	Reference Elevation is	0'0"	Red Flagged nail in Corner of house
Depth of Fill (Downslope)	13"	Bottom of Disposal Area	- 53"	
		Top of Distribution Lines or Chambers	- 35"	

DISPOSAL AREA CROSS SECTION

Scale:
Vertical: 1 inch = 2 Ft.
Horizontal: 1 inch = 10 Ft.

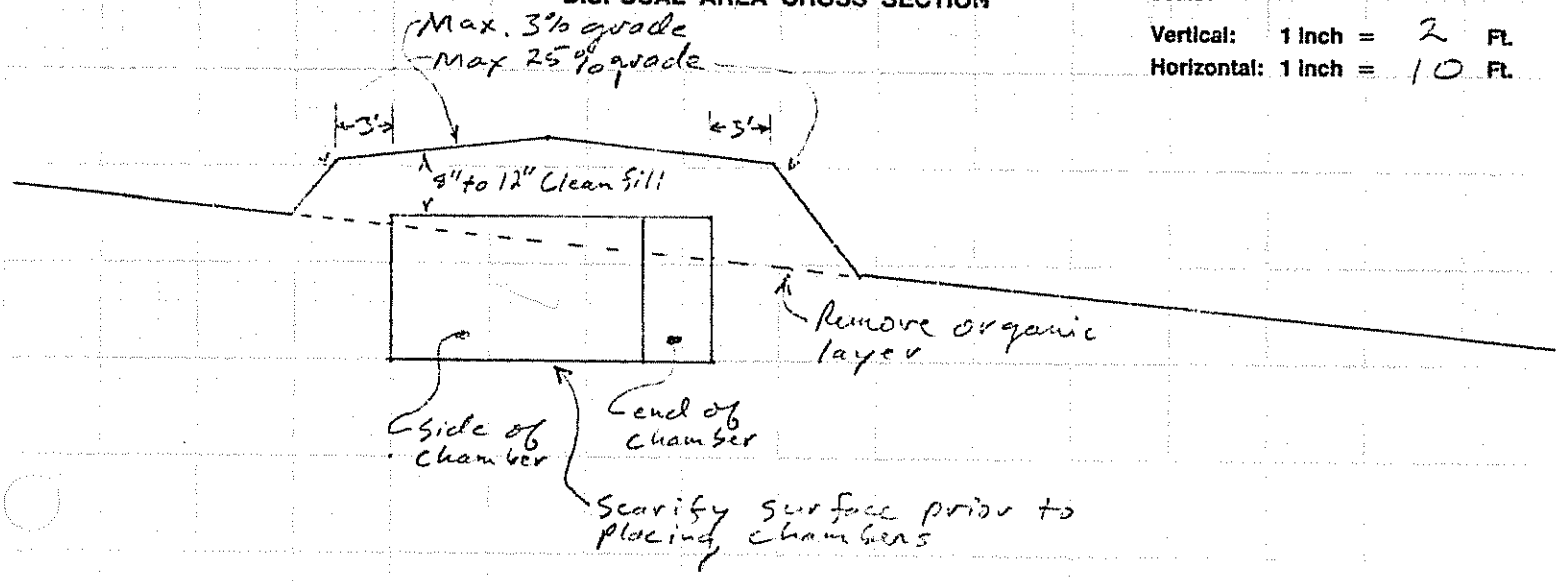

Hansen Taylor
Site Evaluator Signature

201
SE#

7/15/86
Date

GAGNE & SON • GAGNE PRECAST

concrete blocks & masonry supplies

BELGRADE PLANT
P.O. BOX 85, RT. 27
BELGRADE, MAINE 04917
(207) 495-3313

VEAZIE PLANT
P.O. BOX 158
ORONO, MAINE 04473
(207) 942-7393

PRECAST CONCRETE

AMERATION®

Leaching
Field
Chambers

The most important advancement in leaching systems construction in 40 years.

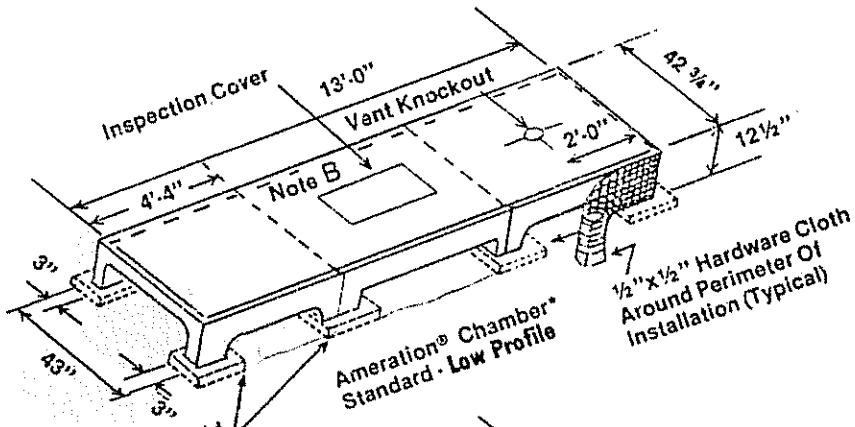

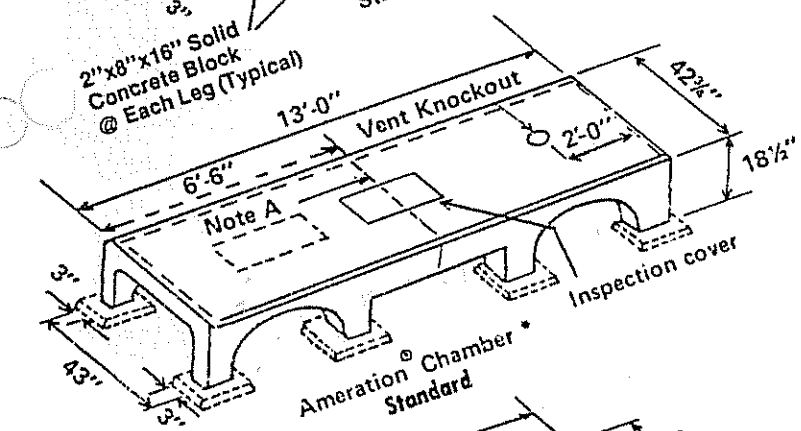

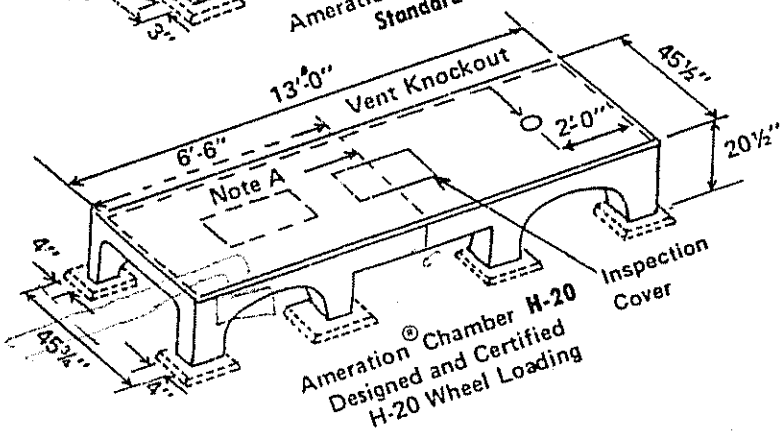

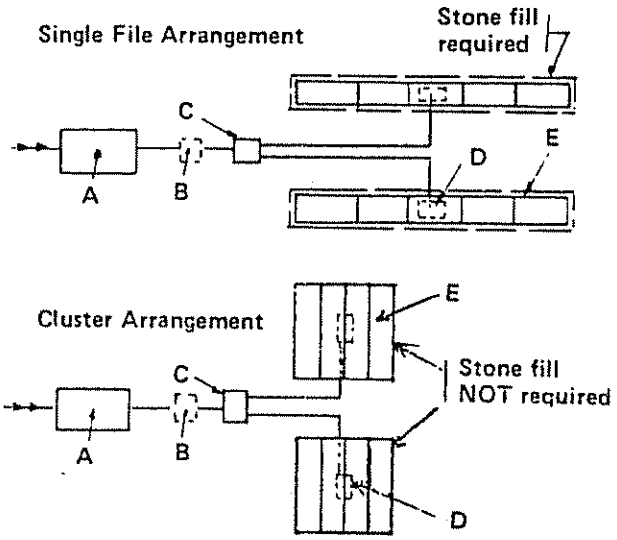

A Septic Tank
B Pump Chamber (If Required)
C Distribution Box
D Solid Velocity Reducing Pit
E Ameration® Chamber

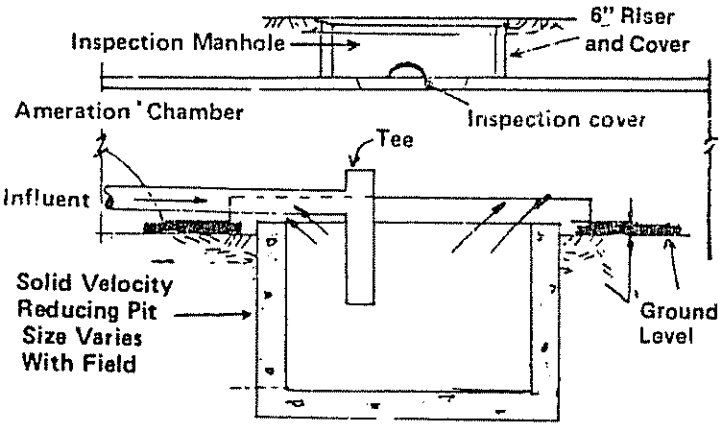

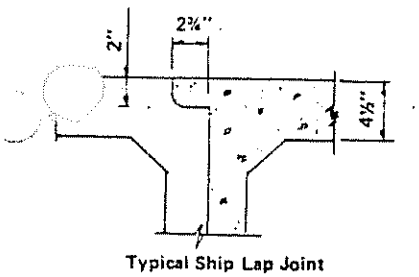

Typical Ship Lap Joint

*Referred to in "State of Maine Private Sewage Disposal Code" as Type "A" Chamber
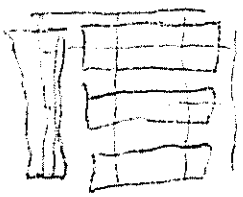
See back page