Brilliant, Ronald

# Original to be sent to Division of Health Engineering, Augusta, Maine 04333 by the LPI



This Application Is For: ○ New System ⊗ Expanded System ○ Conversion Permit ○ Experimental System ⊗ Replacement Of Entire System ○ Disposal Area Only

An Application For Subsurface Wastewater Disposal Permit

This Is NOT A Permit; This Form When Completed Must Be Presented To The Local Plumbing Inspector To Obtain A Permit

| Town | Street, Road, Etc. / If On Water Body, Give Name | Plumbing Permit No. | Date Of Plumbing Permit |
|---|---|---|---|
| Augusta | West River Rd. | 8875EP | 6-16-78 |

| Owner Of Property | Tel.No. | Name Of Applicant Owner's Agent | Tel. No. |
|---|---|---|---|
| Ronald Brilliant | | | |

| Street | Street |
|---|---|
| 374 West River Rd. RFD 3 | |

| Town | State | Zip Code | Town | State | Zip Code |
|---|---|---|---|---|---|
| Augusta | Me. | | | | |

| Owner's Signature | Date | Applicants Signature | Date |
|---|---|---|---|
| x Ronald R. Brilliant | 6-16-78 | | |

| Size Of Lot | Is Lot Zoned? | Type Of Zoning | Subdivision Name | Lot No. |
|---|---|---|---|---|
| 158 x 200 ⊗ Sq. Feet ○ Acres | ○ Yes ⊗ No | | | |

The Water Supply For This Property Is: ○ Dug Well, depth ____; ○ Drilled Well, depth ____; ○ Spring, depth ____;
Surface water ○ Body ○ Course—○ with disinfection, ○ without disinfection. Public Utility, name Augusta WD

## SITE INVESTIGATION

Show Location Of Pits on Site Plan on Page 2

| | Soil Profile No. 1 ☐ Pit ☒ Boring | Soil Profile No. ☐ Pit ☐ Boring | Soil Profile No. ☐ Pit ☐ Boring | Soil Profile No. ☐ Pit ☐ Boring |
|---|---|---|---|---|
| Thickness and Description of each soil | Organic Strata ---------- | Organic Strata | Organic Strata | Organic Strata |
| | 1st Strata BROWN LOAM 8" Inches | 1st Strata Inches | 1st Strata Inches | 1st Strata Inches |
| | 2nd Strata YELLOW BROWN FINE SAND AND SILT 13" Inches | 2nd Strata Inches | 2nd Strata Inches | 2nd Strata Inches |
| | 3rd Strata GREY BROWN FINE SAND AND SILT. 26" Inches | 3rd Strata Inches | 3rd Strata Inches | 3rd Strata Inches |
| | 4th Strata Inches | 4th Strata Inches | 4th Strata Inches | 4th Strata Inches |
| Depth from bottom of organic horizon to: | Total Depth of Observation Hole Inches 47 | Total Depth of Observation Hole Inches | Total Depth of Observation Hole Inches | Total Depth of Observation Hole Inches |
| | Max. Seasonal Water Table Mottling 18 Inches ○ None Evident | Max. Seasonal Water Table Mottling Inches ○ None Evident | Max. Seasonal Water Table Mottling Inches ○ None Evident | Max. Seasonal Water Table Mottling Inches ○ None Evident |
| | Impervious Layer Clay, Etc. Inches ⊗ None Evident | Impervious Layer Clay, Etc. Inches ○ None Evident | Impervious Layer Clay, Etc. Inches ○ None Evident | Impervious Layer Clay, Etc. Inches ○ None Evident |
| | Bedrock Inches ⊗ None Evident Type of Bedrock | Bedrock Inches ○ None Evident Type of Bedrock | Bedrock Inches ○ None Evident Type of Bedrock | Bedrock Inches ○ None Evident Type of Bedrock |
| | Surface Slope 0-2 % | Surface Slope % | Surface Slope % | Surface Slope % |
| | Soil Group 8 / Soil Condition C / Per Table 9-1 Code II | Soil Group / Soil Condition / Per Table 9-1 Code II | Soil Group / Soil Condition / Per Table 9-1 Code II | Soil Group / Soil Condition / Per Table 9-1 Code II |

On 5/23/78 (date), a site investigation for this project was completed. I conducted this soil evaluation and certify that the results indicated above best represent the soil conditions found. I recommend the following type and size of private sewage disposal system. I also recommend the proposed private sewage disposal system layout and location shown on page 2.

Signature [signature] Date Signed 6/7/78 Site Evaluator License Number 51

## DISPOSAL SYSTEM PROPOSED

Show Location of System and Details on Disposal Plan on Page 2

**SYSTEM:**
- ⊗ Combined System
- ○ Separated System

If separated system—type of human waste disposal system to be used:
- ○ Sealed Vault Privy
- ○ Open Pit Privy
- ○ Compost Toilet
- ○ Chemical Toilet
- ○ Incinerator Toilet

**TREATMENT TANK**
- ○ Aerobic Tank
- ⊗ Septic Tank
- ⊗ Concrete
- ○ Fiberglass
- ○ Metal

Size in Gallons 1000 Gal.

Number of Bedrooms 3

**SUBSURFACE ABSORPTION AREA/TYPE**
- ⊗ Bed System No. of Beds ____ Length 54 ft Width 20 ft
- ○ Chamber System Number ____
- ○ Type A ○ Single File
- ○ Type B ○ Cluster
- ○ Special System Length ____ ft Width ____ ft
- ○ Laundry System Type A ____ No. of Chambers: Type B ____

Name and type of establishment if other than private home

**SIZE**
- ○ Small
- ○ Medium
- ○ Med.-Large
- ⊗ Large
- ○ Extra-Large

Design Flow 264 GPD

**SITE MODIFICATION**

Fill will be: 18 in. uphill 22 in. downhill

**DETAILS**
- ○ A Distribution Box is required
- Pumping is—○ required ⊗ is not required
- The dose will be ____ Gallons

**DISTANCES**

⊗ Yes ○ No: The proposed subsurface absorption area will be located at least 100 feet from any and all wells; springs; surface water bodies and courses (lake, pond, ocean, brook, stream, river); swamps; marshes; and bogs

⊗ Yes ○ No: The proposed subsurface absorption area will be located at least 300 feet from any and all wells and springs producing 2000 gallons or more of water per day and any public water supplies.

**PROPERTY/LOT LOCATION MAP**

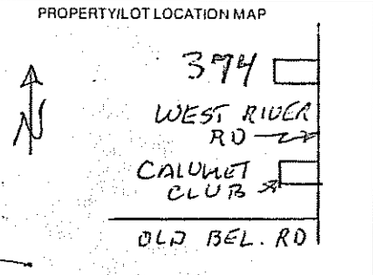


Location—roads, landmarks

WAIVER ○ State Variance Required ○ Replacement Variance Required ⊗ None Required

**FOR THE USE OF LPI ONLY**

○ Denial: Application is denied for the following reasons; portions of the Code II are cited.
Form is incomplete (____ pg.) as to ○ General info., ○ Site Investigation, ○ System Proposed, ○ Site Plan, ○ Disposal System Plan, ○ Cross-Section, ○ Statement. See section 4.1
○ Site Investigation indicates site is ○ unsuitable for disposal system. ○ Unsuitable for system proposed.
○ System Proposed does not conform to Code. ____
○ Site Investigation indicates site modifications are necessary.
✓ Acceptance: Application for permit is approved ○ with condition specified, comply with Section ____ ✓ without condition.

Signed LPI Richard P. Baker Date 6-16-78 HHE-200 1/78

# APPLICATION FOR SUBSURFACE WASTEWATER DISPOSAL PERMIT

(For systems disposing of less than 2000 gallons per day)

Town | Street, Road, etc. | Owner of Property

If on water body, give name

## Site Plan

Scale 1" = 50' ft.

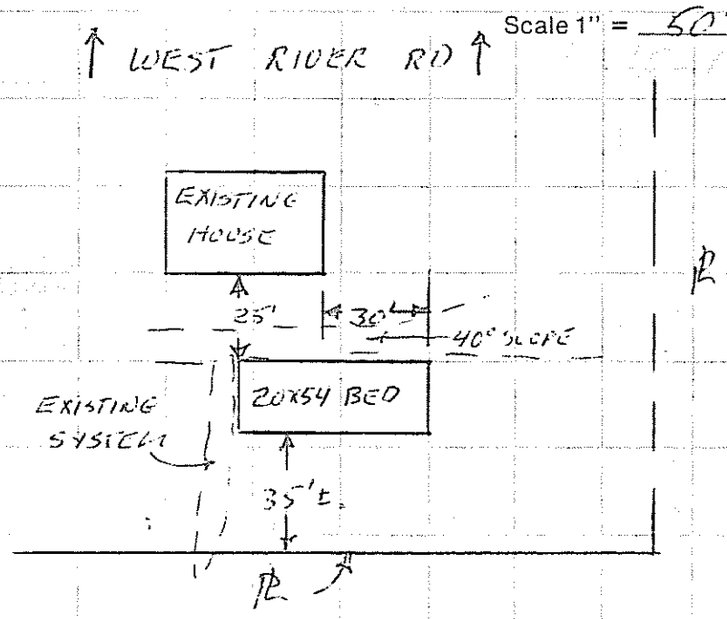


● Designates Elevation Reference Point ○ Designates Test Pit

## Private Sewage Disposal Plan

Scale 1" = 20' or _____

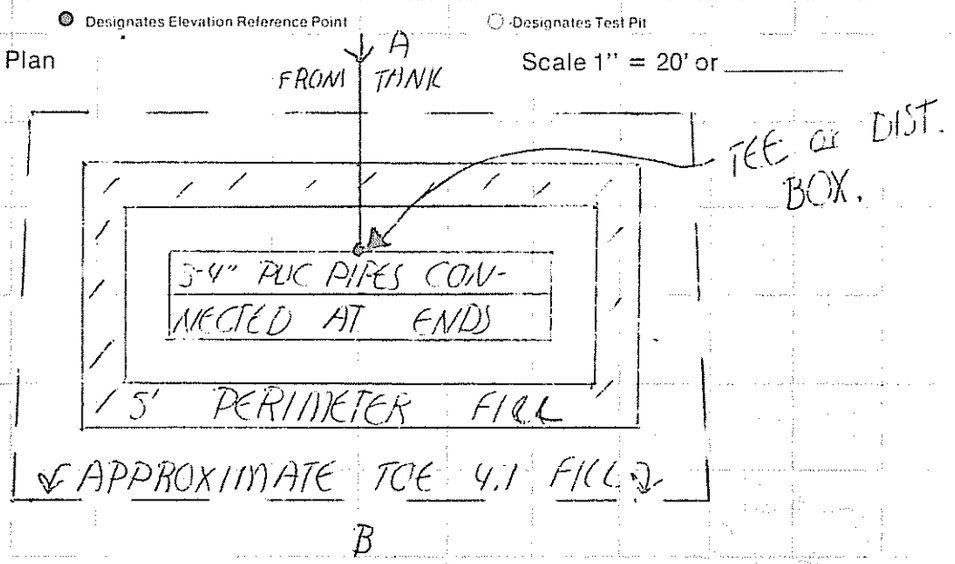


## Subsurface Absorption Area Cross-section

Scale: Vertical—1" = 5' or _____
Horizontal—1" = ~~20~~ or 10'

(1) 3" TOPSOIL CROWNED (2) 3%
(3) 3" SAND (5) 2" HAY
(4) 10" STONE (6) 2" SAND

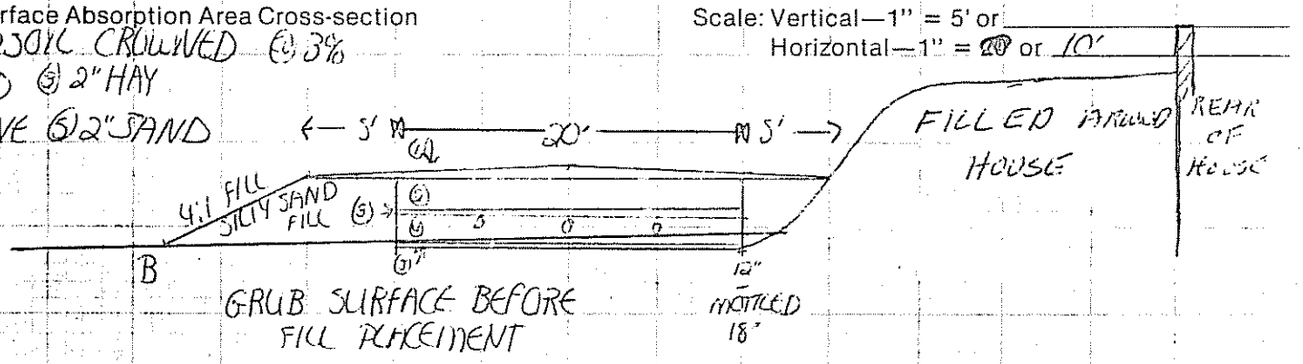


Site Evaluators Signature: [signature] Date: 6/7/78 License Number: 51

HHE-200 1/78

Signature Required

Statement: (no permit may be issued unless signed)
I certify that all the information submitted to be true and correct; and I understand that issuance of a permit is based upon the information and plans submitted by the applicant. I also understand that any falsification of this application is reason to deny a permit to install a private sewage disposal system and that the permit is valid for a six (6) month period from the date of permit issuance. I understand that no guarantee is intended or implied by reason of any advice or approval given by the Administrative Authority or its agent.

Date: 6-16-78

Applicant: _____

Owner: x Ronald R. Brillant