SUBSURFACE WASTEWATER DISPOSAL SYSTEM APPLICATION

Maine Department of Human Services
Division of Health Engineering, Station 10
(207)287-5672 FAX (207)287-4172

PROPERTY LOCATION

City, Town, or Plantation	AUGUSTA
Street or Road	RIVERSIDE DRIVE
Subdivision, Lot #	

>> Caution: Permit Required -- Attach in Space Below <<

AUGUSTA Subsurface Wastewater Disposal System shall not be installed until a Permit has been issued by the Plumbing Inspector. 4487 TOWN COPY

Date Permit Issued: 9/8/00 $ 175.00 FEE ☐ If Double Fee Charged

Local Plumbing Inspector Signature L.P.I. # 850

OWNER/APPLICANT INFORMATION

Name (last, first, MI)	RYAN, WALTER — ☐ Owner ☐ Applicant
Mailing Address of ■ Owner ☐ Applicant	897 RIVERSIDE DRIVE AUGUSTA, ME 04330
Daytime Tel. #	623-9438

Municipal Tax Map # 55 Lot # 10A

Owner or Applicant Statement

I state that the information submitted is correct to the best of my knowledge and understand that any falsification is reason for the Department and/or Local Plumbing Inspector to deny a Permit.

Walter Ryan
Signature of Owner/Applicant Date

Caution: Inspection Required

I have inspected the installation authorized above and found it to be in compliance with the Subsurface Wastewater Disposal Rules Application 9/21/00
(1st) Date Approved

Local Plumbing Inspector Signature (2nd) Date Approved

PERMIT INFORMATION

TYPE OF APPLICATION:
1. ☐ First Time System
2. ■ Replacement System
Type Replaced TRENCH
Year Installed 1965
3. ☐ Expanded System
   a. ☐ Minor Expansion
   b. ☐ Major Expansion
4. ☐ Experimental System
5. ☐ Seasonal Conversion

THIS APPLICATION REQUIRES
1. ■ No Rule Variance
2. ☐ First Time System Variance
   a. ☐ Local Plumbing Inspector approval
   b. ☐ State & Local Plumbing Inspector approval
3. ☐ Replacement System Variance
   a. ☐ Local Plumbing Inspector approval
   b. ☐ State & Local Plumbing Inspector approval
4. ☐ Minimum Lot Size Variance
5. ☐ Seasonal Conversion Variance

DISPOSAL SYSTEM COMPONENT(S)
1. ☐ Complete Non-engineered System
2. ☐ Primitive System (graywater & alt. toilet)
3. ☐ Alternative Toilet, specify
4. ☐ Non-Engineered Treatment Tank (only)
5. ☐ Holding Tank gallons
6. ■ Non-engineered Disposal Field (only)
7. ☐ Separated Laundry System
8. ☐ Complete Engineered System (2000 gpd or more)
9. ☐ Engineered Treatment Tank (only)
10. ☐ Engineered Disposal Field (only)
11. ☐ Pretreatment, specify:
12. ☐ Miscellaneous components

SIZE OF PROPERTY
2 ☐ sq. ft. ■ acres

SHORELAND ZONING
☐ Yes ■ No

DISPOSAL SYSTEM TO SERVE:
1. ■ Single Family Dwelling Unit, No. of Bedrooms: 3
2. ☐ Multiple Family Dwelling Unit, No. of Units:
3. ☐ Other
SPECIFY

TYPE OF WATER SUPPLY
1. ☐ Drilled Well 2. ☐ Dug Well 3. ☐ Private
4. ■ Public 5. ☐ Other

DESIGN DETAILS (SYSTEM LAYOUT SHOWN ON PAGE 3)

TREATMENT TANK
1. ■ Concrete
   a. ■ Regular
   b. ☐ Low Profile
2. ☐ Plastic
3. ☐ Other EXISTING
CAPACITY 1000 gallons

DISPOSAL FIELD TYPE & SIZE
1. ■ Stone Bed 2. ☐ Stone Trench
3. ☐ Proprietary Device
   a. ☐ Cluster Array c. ☐ Linear
   b. ☐ Regular load d. ☐ H-20 load
4. ☐ Other
SIZE 1100 ■ sq. ft. ☐ lin. ft.

GARBAGE DISPOSAL UNIT
1. ■ No 3. ☐ Maybe
2. ☐ Yes >> Specify one below:
   a. ☐ Multi-compartment Tank
   b. ☐ Tanks in Series
   c. ☐ Increase in Tank Capacity
   d. ☐ Filter on Tank Outlet

DESIGN FLOW
270 gallons per day
BASED ON:
1. ■ Table 501.1 (dwelling unit(s)
2. ☐ Table 501.2 (other facilities)
SHOW CALCULATIONS
-for other facilities-
3. ☐ Section 503.0 (meter readings)
ATTACH WATER-METER DATA

SOIL DATA & DESIGN CLASS
PROFILE / CONDITION / DESIGN
8 / C / 1
at Observation Hole # TP-1
Depth 17 " Elevation "
OF MOST LIMITING SOIL FACTOR

DISPOSAL FIELD SIZING
1. ☐ Small - 2.0 sq. ft./gpd
2. ☐ Medium - 2.6 sq. ft./gpd
3. ☐ Medium-Large - 3.3 sq. ft./gpd
4. ■ Large - 4.1 sq. ft./gpd
5. ☐ Extra-Large - 5.0 sq. ft./gpd

PUMPING
1. ■ Not Required
2. ☐ May Be Required
3. ☐ Required>> Specify only for engineered or experimental systems
DOSE gallons

SITE EVALUATOR'S STATEMENT

I certify that on 9/5/2000 (date) I completed a site evaluation on this property and state that the data reported are accurate and that the proposed system is in compliance with the State of Maine Subsurface Wastewater Disposal Rules (10-144A CMR 241).

William P Brown
Site Evaluator Signature

188
SE#

9/7/2000
Date

WILLIAM P BROWN
Site Evaluator Name Printed

293-2110
Telephone #

SUBSURFACE WASTEWATER DISPOSAL SYSTEM APPLICATION

Department of Human Services
Division of Health Engineering
(207) 287-5672 FAX 207 287-4172

Town, City, Plantation	Street, Road, Subdivision	Owners Name
AUGUSTA	RIVERSIDE DRIVE	WALTER RYAN

SITE PLAN

Scale 1" = 100 Ft.

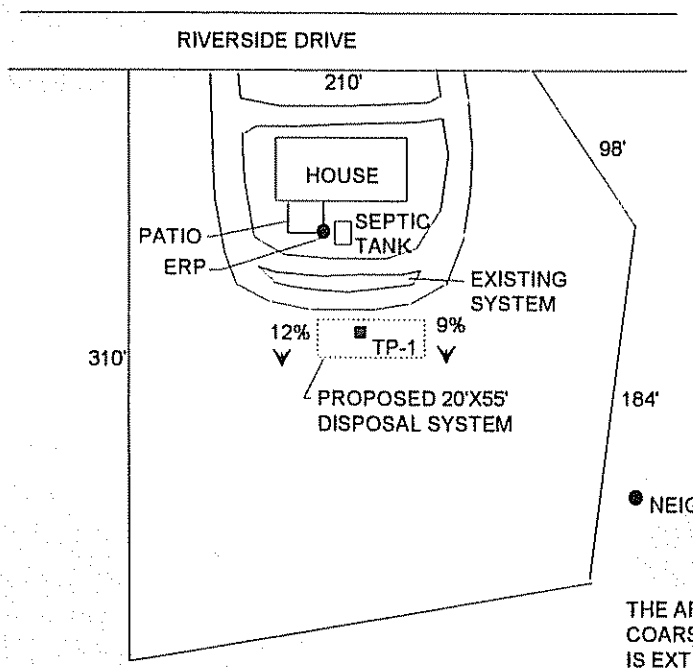

SITE LOCATION PLAN
(Map from Maine Atlas recommended)

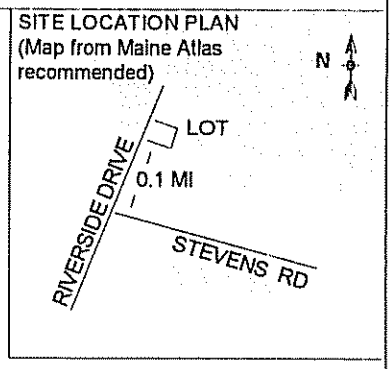

ERP TO TP-1 = 51'
EXISTING SEPTIC TANK TO REMAIN IN USE

PROPOSED SYSTEM IS 103 FT FROM NEIGHBOR'S WELL

THE AREA OF THE PROPOSED SYSTEM CONTAINS COARSE SAND FILL PLACED IN 1965. THE AREA IS EXTENSIVE AND IS CONSIDERED EQUIVALENT TO ORIGINAL FOR DESIGN PURPOSES

SOIL DESCRIPTION AND CLASSIFICATION (Location of Observation Holes Shown Above)

Observation Hole TP-1 ■ Test Pit ☐ Boring

0 " Depth of Organic Horizon Above Mineral Soil

DEPTH BELOW MINERAL SOIL SURFACE (Inches)

Depth	Texture	Consistancy	Color	Mottling
0	SANDY LOAM	FRIABLE	MEDIUM BROWN	
10	COARSE SAND FILL			NONE
20	SILT LOAM	FIRM	LT BRN OLIVE BRN	COMMON
30				
40				
50				

Soil Classification		Slope	Limiting Factor	
8 Profile	C Condition	9-12 %	17 "	■ Ground Water ☐ Restrictive Layer ☐ Bedrock ☐ Pit Depth

Observation Hole _____ ☐ Test Pit ☐ Boring

_____ " Depth of Organic Horizon Above Mineral Soil

DEPTH BELOW MINERAL SOIL SURFACE (Inches)

Depth	Texture	Consistancy	Color	Mottling
0				
10				
20				
30				
40				
50				

Soil Classification		Slope	Limiting Factor	
Profile	Condition	%	"	☐ Ground Water ☐ Restrictive Layer ☐ Bedrock ☐ Pit Depth

WILLIAM P BROWN *William P Brown* — Site Evaluator Signature

188 — SE #

9/7/2000 — Date

SUBSURFACE WASTEWATER DISPOSAL SYSTEM APPLICATION

Department of Human Services
Division of Health Engineering

Town, City, Plantation	Street, Road, Subdivision	Owners Name
AUGUSTA	RIVERSIDE DRIVE	WALTER RYAN

SUBSURFACE WASTEWATER DISPOSAL PLAN

Scale 1" 20 Ft.

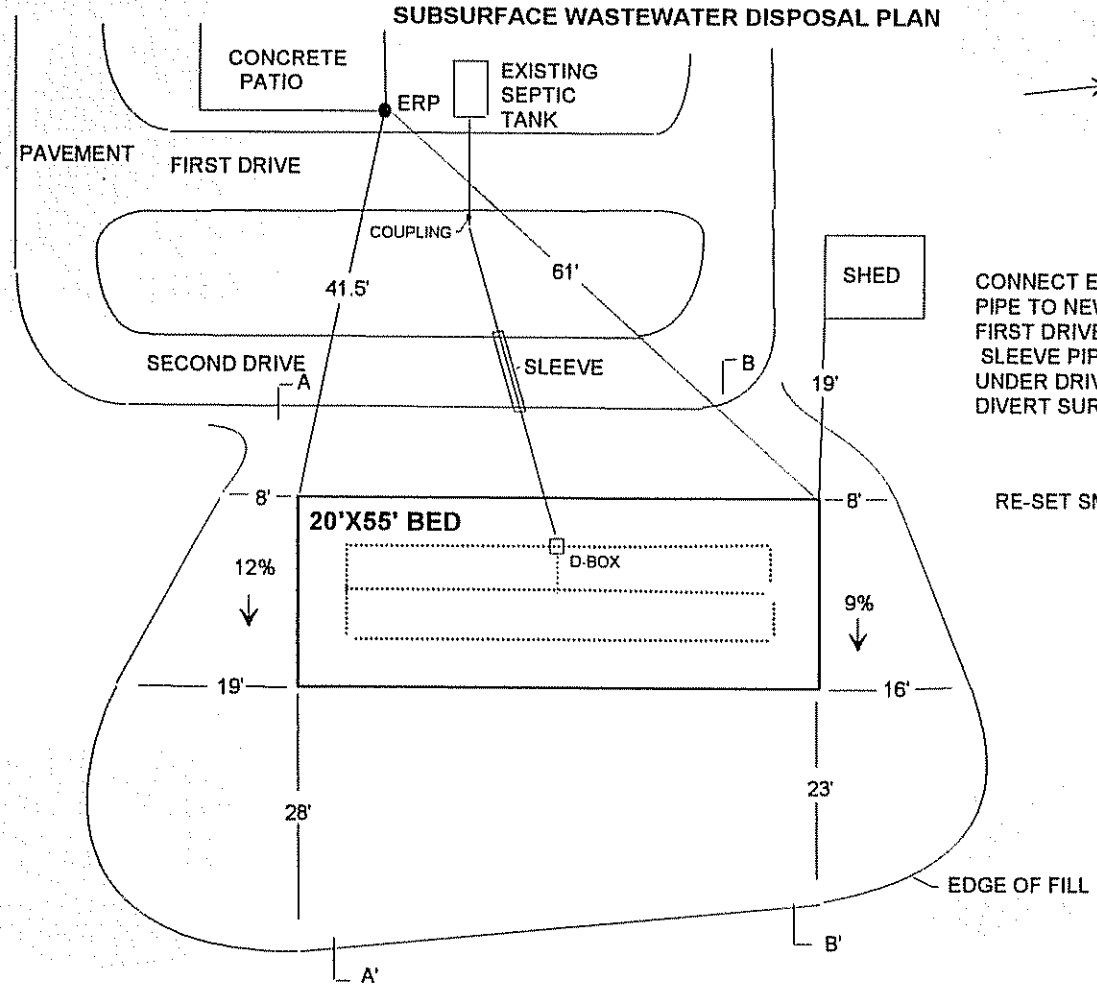

CONNECT EXISTING 4 INCH CAST IRON PIPE TO NEW 4 INCH SDR 35 PVC AT FIRST DRIVEWAY WITH FERNCO COUPLING
SLEEVE PIPE INSIDE SCHEDULE 40 PVC UNDER DRIVEWAY
DIVERT SURFACE DRAINAGE FROM BED

RE-SET SMALL TREES OUTSIDE AREA

FILL REQUIREMENTS		CONSTRUCTION ELEVATIONS		ELEVATION REFERENCE POINT LOCATION & DESCRIPTION
Depth of Fill (Upslope)	19-20"	Reference Elevation Is	00"	TOP CORNER OF CONCRETE PATIO
Depth of Fill (Downslope)	40-49"	Bottom of Disposal Area	-68"	
		Top of distribution Lines or Chambers	-57"	

DISPOSAL AREA CROSS SECTION

Scale:
Vertical: 1 inch = 5 Ft.
Horizontal: 1 inch = 10 Ft.

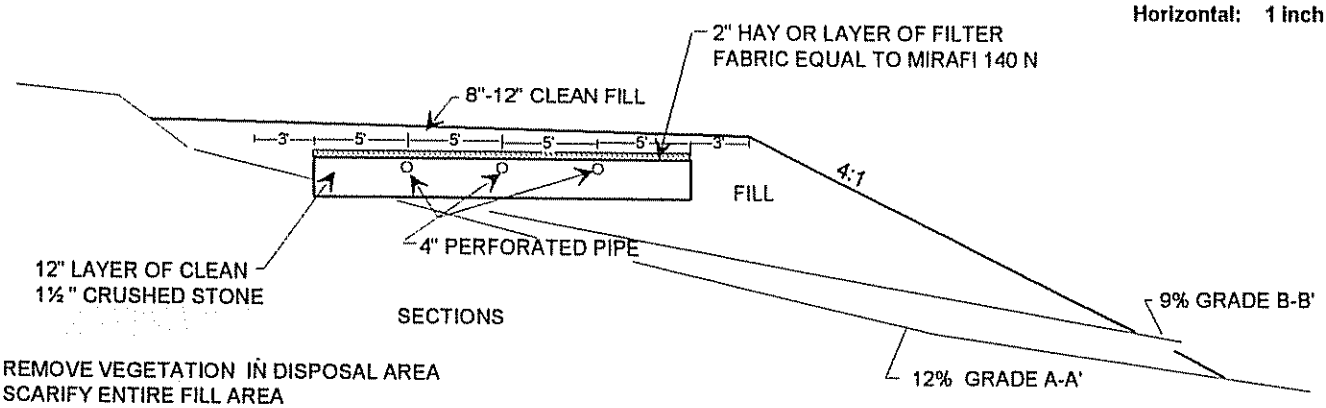

REMOVE VEGETATION IN DISPOSAL AREA
SCARIFY ENTIRE FILL AREA
MIX 4 INCHES OF FILL MATERIAL WITH ORIGINAL SOIL TO FORM A TRANSITION ZONE (ACCORDING TO CHAPTER 8 OF THE PLUMBING CODE)
ALL FILL SHALL BE GRAVELLY COARSE SAND
[illegible]OWN FINISH GRADE FROM CENTER AT 3% OR
[illegible]OPE ALL ONE WAY FROM DRIVEWAY EMBANKMENT (AS SHOWN)
LOAM, SEED, MULCH DISTURBED AREAS

WILLIAM P BROWN *William P Brown*	188	9/7/2000
Site Evaluator Signature	SE #	Date