PIF 1150/L28 10/9/15

SUBSURFACE WASTEWATER DISPOSAL SYSTEM APPLICATION

Maine Dept.Health & Human Services
Div of Environmental Health , 11 SHS
(207) 287-5672 Fax: (207) 287-4172

PROPERTY LOCATION

City, Town, or Plantation	Augusta
Street or Road	477 Riverside Drive
Subdivision, Lot #	N/A

>> CAUTION: LPI APPROVAL REQUIRED <<

AUGUSTA PERMIT #7144 TOWN COPY
Date Permit Issued: 10 / 9 / 15 $ 150 - fee
LPI # 1137

OWNER/APPLICANT INFORMATION

Name (last, first, MI)	Sherman, Stephanie ☒ Owner ☐ Applicant
Mailing Address of Owner/Applicant	477 Riverside Drive Augusta, ME 04330
Daytime Tel. #	207-623-2521 (o)

OWNER OR APPLICANT STATEMENT
I state and acknowledge that the information submitted is correct to the best of my knowledge and understand that any falsification is reason for the Department and/or Local Plumbing Inspector to deny a Permit.
Barry Crowell 10-2-15
Signature of ~~Owner or~~ Applicant Date
207-377-2541

CAUTION: INSPECTION REQUIRED
I have inspected the installation authoirzed above and found it to be in compliance with the Subsurface Wastewater Disposal Rules Application.
(1st) date approved
Local Plumbing Inspector Signature (2nd) date approved

PERMIT INFORMATION

TYPE OF APPLICATION
- ☐ 1. First Time System
- ☒ 2. Replacement System
- Type replaced: Trench
- Year installed: Unknown
- ☐ 3. Expanded System
  - ☐ a. <25% Expansion
  - ☐ b. ≥25% Expansion
- ☐ 4. Experimental System
- ☐ 5. Seasonal Conversion

THIS APPLICATION REQUIRES
- ☒ 1. No Rule Variance
- ☐ 2. First Time System Variance
  - ☐ a. Local Plumbing Inspector Approval
  - ☐ b. State & Local Plumbing Inspector Approval
- ☐ 3. Replacement System Variance
  - ☐ a. Local Plumbing Inspector Approval
  - ☐ b. State & Local Plumbing Inspector Approval
- ☐ 4. Minimum Lot Size Variance
- ☐ 5. Seasonal Conversion Permit

DISPOSAL SYSTEM COMPONENTS
- ☐ 1. Complete Non-engineered System
- ☐ 2. Primitive System (graywater & alt. toilet)
- ☐ 3. Alternative Toilet, specify: _____
- ☐ 4. Non-engineered Treatment Tank (only)
- ☐ 5. Holding Tank, _____ gallons
- ☒ 6. Non-engineered Disposal Field (only)
- ☐ 7. Separated Laundry System
- ☐ 8. Complete Engineered System (2000 gpd or more)
- ☐ 9. Engineered Treatment Tank (only)
- ☐ 10. Engineered Disposal Field (only)
- ☐ 11. Pre-treatment, specify: _____
- ☐ 12. Miscellaneous Components

SIZE OF PROPERTY
1 ± ☐ SQ. FT. ☒ ACRES

DISPOSAL SYSTEM TO SERVE
- ☒ 1. Single Family Dwelling Unit, No. of Bedrooms: 3
- ☐ 2. Multiple Family Dwelling, No. of Units: _____
- ☐ 3. Other: _____ (specify)

Current Use ☐ Seasonal ☒ Year Round ☐ Undeveloped

TYPE OF WATER SUPPLY
☐ 1. Drilled Well ☐ 2. Dug Well ☐ 3. Private
☒ 4. Public ☐ 5. Other

SHORELAND ZONING
☐ Yes ☒ No

DESIGN DETAILS (SYSTEM LAYOUT SHOWN ON PAGE 3)

TREATMENT TANK – Existing
- ☒ 1. Concrete
  - ☒ a. Regular
  - ☐ b. Low Profile
- ☐ 2. Plastic
- ☐ 3. Other: _____
- CAPACITY: 4,000 GAL.

DISPOSAL FIELD TYPE & SIZE
- ☐ 1. Stone Bed ☐ 2. Stone Trench
- ☒ 3. Proprietary Device
  - ☐ a. cluster array ☒ c. Linear
  - ☒ b. regular load ☐ d. H-20 load
- ☐ 4. Other: 20 Eljen units
- SIZE: 960 ☒ sq. ft. ☐ lin. ft.

GARBAGE DISPOSAL UNIT
☒ 1. No ☐ 2. Yes ☐ 3. Maybe
If Yes or Maybe, specify one below:
- ☐ a. multi-compartment tank
- ☐ b. ___ tanks in series
- ☐ c. increase in tank capacity
- ☐ d. Filter on Tank Outlet

DESIGN FLOW
270 gallons per day
BASED ON:
- ☒ 1. Table 4A (dwelling unit(s))
- ☐ 2. Table 4C(other facilities) SHOW CALCULATIONS for other facilites
- ☐ 3. Section 4G (meter readings) ATTACH WATER METER DATA

SOIL DATA & DESIGN CLASS
PROFILE CONDITION
2 / B
at Observation Hole # 1
Depth >48"
of Most Limiting Soil Factor

DISPOSAL FIELD SIZING
- ☐ 1. Medium---2.6 sq. ft. / gpd
- ☒ 2. Medium---Large 3.3 sq. f.t / gpd
- ☐ 3. Large---4.1 sq. ft. / gpd
- ☐ 4. Extra Large---5.0 sq. ft. / gpd

EFFLUENT/EJECTOR PUMP
- ☒ 1. Not Required
- ☐ 2. May Be Required
- ☐ 3. Required

Specify only for engineered systems:
DOSE: _____ gallons

LATITUDE AND LONGITUDE
at center of disposal area
Lat. 44 d 20 m 46.34 s N
Lon. 69 d 44 m 59.96 s W
if g.p.s, state margin of error: —

SITE EVALUATOR STATEMENT

I certify that on 9/10/15 (date) I completed a site evaluation on this property and state that the data reported are accurate and that the proposed system is in compliance with the State of Maine Subsurface Wastewater Disposal Rules (10-144A CMR 241).

Kenneth G. Stratton 157 9/11/15
Site Evaluator Signature SE # Date

STATE OF MAINE KENNETH G. STRATTON LSE 157 SITE EVALUATOR

Kenneth G. Stratton 207-491-1146 ken@main-landdci.com
Site Evaluator Name Printed Telephone Number E-mail Address

Note : Changes to or deviations from the design should be confirmed with the Site Evaluator.

POB 03 315, Winthrop, ME 04364-0315

SUBSURFACE WASTEWATER DISPOSAL SYSTEM APPLICATION

Department of Health & Human Services
Division of Environmental Health
(207) 287-5672 Fax: (207) 287-3165

Town, City, Plantation	Street, Road, Subdivision	Owner's Name
Augusta	477 Riverside Drive	Stephanie Sherman

SITE PLAN Scale 1" = 50 ft. or as shown

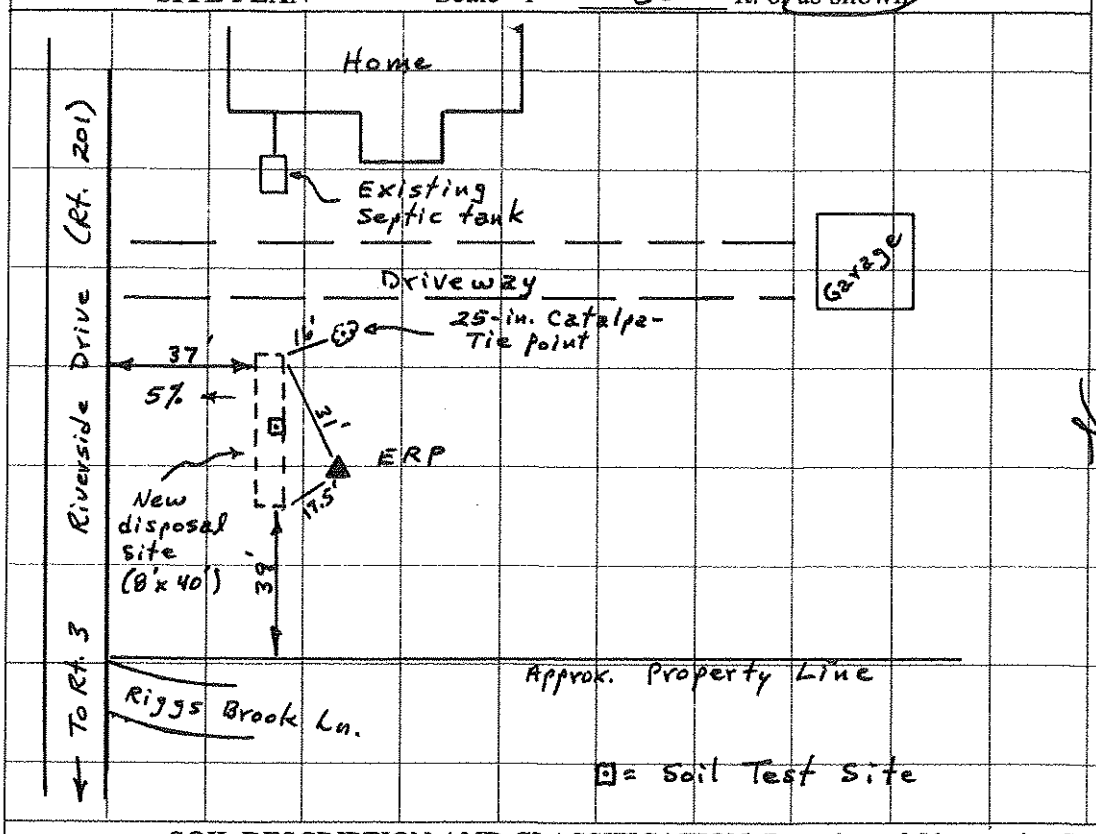

SITE LOCATION PLAN
(map from Maine Atlas recommended)

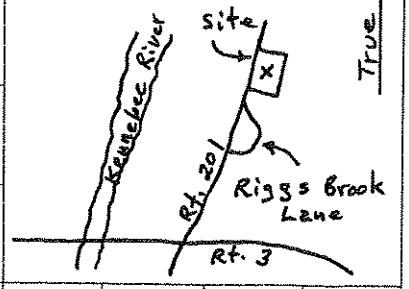

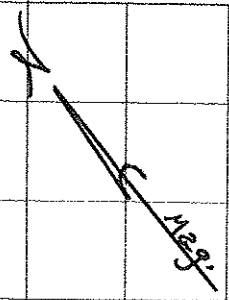

SOIL DESCRIPTION AND CLASSIFICATION (Location of Observation Holes Shown Above)

Observation Hole _____ ☒ Test Pit ☐ Boring
<1 " Depth of Organic Horizon Above Mineral Soil

Depth Below Mineral Soil Surface (inches)	Texture	Consistency	Color	Mottling
0–50	Fine sandy loam and loamy fine sand glacial till w/ few stones	Friable	Brown → Red brown → yellow brown to light yellow brown	None

Soil Classification	Slope	Limiting Factor	
2 Profile / B Condition	5 %	>48 "	[ ] Ground Water [ ] Restrictive Layer [ ] Bedrock ☒ Pit Depth

Observation Hole _____ ☐ Test Pit ☐ Boring
_____ " Depth of Organic Horizon Above Mineral Soil

Depth Below Mineral Soil Surface (inches)	Texture	Consistency	Color	Mottling
0–50				

Soil Classification	Slope	Limiting Factor	
Profile / Condition	%	"	[ ] Ground Water [ ] Restrictive Layer [ ] Bedrock [ ] Pit Depth

Kenneth G. Stratton — Site Evaluator Signature
157 — SE #
9/11/15 — Date

SUBSURFACE WASTEWATER DISPOSAL SYSTEM APPLICATION

Department of Health & Human Services
Division of Environmental Health
(207) 287-5672 Fax: (207) 287-3165

Town, City, Plantation	Street, Road, Subdivision	Owner's Name
Augusta	477 Riverside Drive	Stephanie Sherman

SUBSURFACE WASTEWATER DISPOSAL PLAN

0 [ ] _____

SCALE: 1" = 20 FT.

Note: This design requires installation of 20, Type B Eljen In-Drain units, set in two rows and fed equally by a large distribution box. The rows are at the same elevation. Manifold back of the rows.

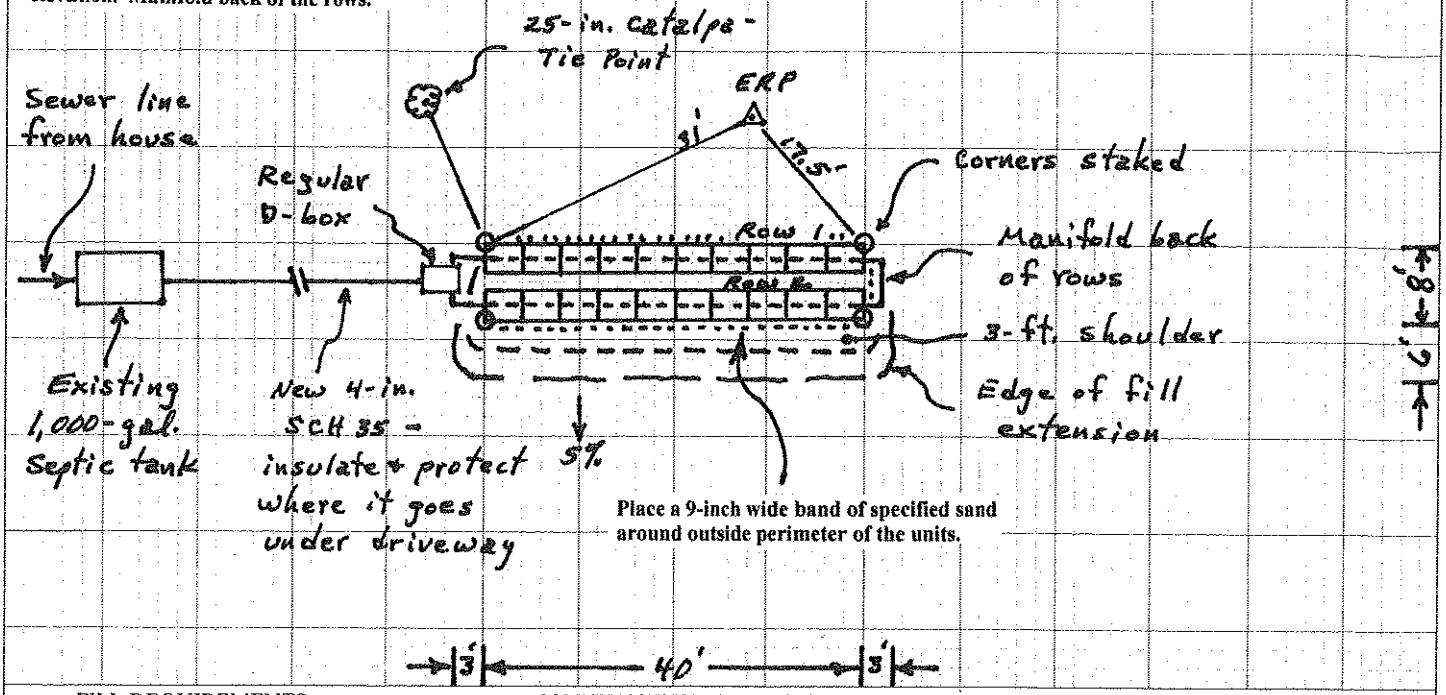

FILL REQUIREMENTS		CONSTRUCTION ELEVATIONS	ELEVATION REFERENCE POINT
Depth of Fill (Upslope)	0"	Finished Grade Elevation - See Attached p. 4	**Flagged nail in a 20-inch white birch tree located southerly of disposal site. Nail is 16" up on tree. ERP = 0"**
Depth of Fill (Downslope)	2"	Top of Distribution Pipe or Proprietary Device	
		Bottom of Disposal Area	

DISPOSAL AREA CROSS SECTION

Scale
Horizontal 1" = 5 ft.
Vertical 1" = 5 ft.

See Attached Page 4 -
Disposal Area Cross Section

Kenneth G. Strelka — 157 — 9/11/15

Site Evaluator Signature — SE # — Date

Attachment to Form HHE-200

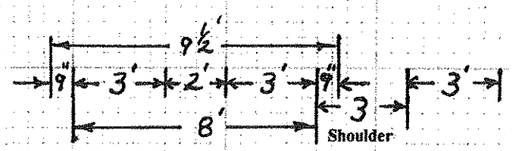

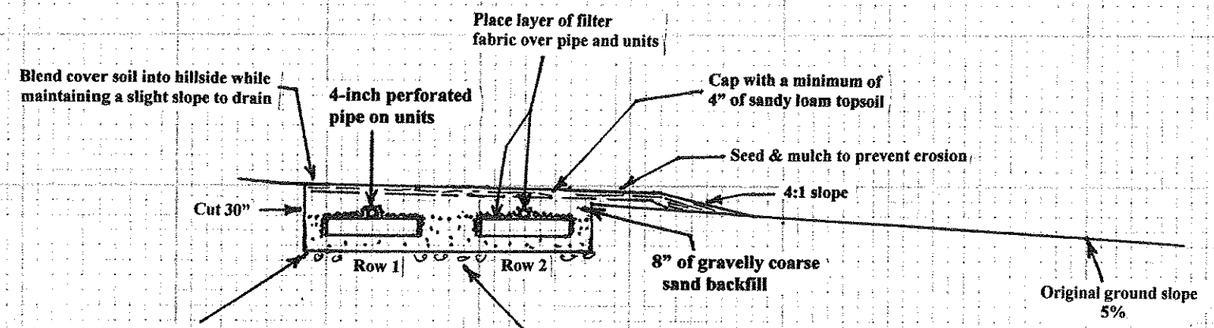

Specified Sand: The system must be installed using a medium to coarse sand with an effective size of 0.25 to 2.0 mm, no greater than 10% passing a #100 sieve and 5% passing a #200 sieve, and no particles larger than 0.375", or materials meeting the ASTM C33 specification with less than 10% passing a #100 sieve and less than 5% passing a #200 sieve. Washed concrete sand easily meets the above specification and is a reliable choice. Suitability of bank run sand must be verified.

NOTE: "Backfill" means gravelly coarse sand

ELEVATIONS - ERP = 0"

	Row 1	Row 2
Finished Grade	-40" ±	-40" ±
Top of Perforated Pipe	-53"	-53"
Bottom of Units	-64"	-64"
Bottom of Sand	-70"	-70"

STATE OF MAINE
KENNETH G. STRATTON
LSE 157
SITE EVALUATOR
9/11/15

Depth of fill upslope = 0"
Depth of fill downslope = 2"

DISPOSAL AREA CROSS SECTION

Design Completed for: Stephanie Sherman
Location: 477 Riverside Drive, Augusta

SCALE: 1" = 5' (both horizontal & vertical)