SUBSURFACE WASTEWATER DISPOSAL SYSTEM APPLICATION

Maine Department of Human Services
Division of Health Engineering, Station 10
(207) 287-5672 FAX (207) 287-4172

PROPERTY LOCATION	
City, Town, Plantation	Augusta
Street or Road	518 Riverside Drive
Subdivision, Lot #	

>> Caution: Permit Required -- Attach In Space Below <<

AUGUSTA 4539 TOWN COPY
Date Permit Issued 1/19/99 $170.00 ☐ If Double Fee Charged
FEE
Local Plumbing Inspector Signature L.P.I. # 1850

OWNER/APPLICANT INFORMATION	
Name (last, first, MI)	Nims, John L. ☒ Owner ☒ Applicant
Mailing Address of ☒ Owner ☒ Applicant	518 Riverside Drive Augusta, Maine 04330
Daytime Tel. #	(207) 623-8959

Municipal Tax Map # 50 Lot # 15

Owner or Applicant Statement

I state that the information submitted is correct to the best of my knowledge and understand that any falsification is reason for the Department and/or Local Plumbing Inspector to deny a Permit.

Signature of Owner or Applicant — Date 10/2/00

Caution: Inspection Required

I have inspected the installation authorized above and found it to be in compliance with the Subsurface Wastewater Disposal Rules Application. 12-5-00 (1st) Date Approved

Local Plumbing Inspector Signature — (2nd) Date Approved

PERMIT INFORMATION

TYPE OF APPLICATION

1. ☒ First Time System
2. ☐ Replacement System
   Type Replaced: _____
   Year Installed: _____
3. ☐ Expanded System
   a. ☐ Minor Expansion
   ☐ Major Expansion
4. ☐ Experimental System
5. ☐ Seasonal Conversion

THIS APPLICATION REQUIRES

1. ☒ No Rule Variance
2. ☐ First Time System Variance
   a. ☐ Local Plumbing Inspector Approval
   b. ☐ State & Local Plumbing Inspector Approval
3. ☐ Replacement System Variance
   a. ☐ Local Plumbing Inspector Approval
   b. ☐ State & Local Plumbing Inspector Approval
4. ☐ Minimum Lot Size Variance
5. ☐ Seasonal Conversion Approval

DISPOSAL SYSTEM COMPONENT(S)

1. ☒ Complete Non-engineered System
2. ☐ Primitive System (graywater & alt toilet)
3. ☐ Alternative Toilet, specify: _____
4. ☐ Non-Engineered Treatment Tank (only)
5. ☐ Holding Tank, _____ gallons
6. ☐ Non-engineered Disposal Field (only)
7. ☐ Separated Laundry System
8. ☐ Complete Engineered System (2000 gpd or more)
9. ☐ Engineered Treatment Tank (only)
10. ☐ Engineered Disposal Field (only)
11. ☐ Pre-treatment, specify: _____
12. ☐ Miscellaneous components

SIZE OF PROPERTY

9 ± ☐ sq. ft. ☒ acres

SHORELAND ZONING

☐ Yes ☒ No

DISPOSAL SYSTEM TO SERVE

1. ☒ Single Family Dwelling Unit, No. of Bedrooms: 4
2. ☐ Multiple Family Dwelling, No. of Units: _____
3. ☐ Other: _____ SPECIFY

TYPE OF WATER SUPPLY

1. ☐ Drilled Well 2. ☐ Dug Well 3. ☐ Private
4. ☒ Public 5. ☐ Other:

DESIGN DETAILS (SYSTEM LAYOUT SHOWN ON PAGE 3)

TREATMENT TANK

1. ☒ Concrete
   a. ☒ Regular
   b. ☐ Low Profile
2. ☐ Plastic
3. ☐ Other: _____

CAPACITY 1000 gallons

DISPOSAL FIELD TYPE & SIZE

1. ☒ Stone Bed 2. ☐ Stone Trench
3. ☐ Proprietary Device
   a. ☐ Cluster array c. ☐ Linear
   b. ☐ Regular load d. ☐ H-20 load
4. ☐ Other: _____

SIZE 1230 ☒ sq. ft. ☐ lin. ft.

GARBAGE DISPOSAL UNIT

1. ☒ No 3. ☐ Maybe
2. ☐ Yes >> Specify one below:
   a. ☐ Multi-compartment Tank
   b. ☐ Tanks in Series
   c. ☐ Increase in Tank Capacity
   d. ☐ Filter on Tank Outlet

DESIGN FLOW

360 gallons per day

BASED ON:

1. ☒ Table 501.1 (dwelling unit(s)
2. ☐ Table 501.2 (other facilities)

SHOW CALCULATIONS -- for other facilities --

3. ☐ Section 503.0 (meter readings)

ATTACH WATER METER DATA

SOIL DATA & DESIGN CLASS

PROFILE	CONDITION	DESIGN
3	C	1

at Observation Hole # 1

Depth 20 " Elevation -75 "

OF MOST LIMITING SOIL FACTOR

DISPOSAL FIELD SIZING

1. ☐ Small -- 2.0 sq. ft./gpd
2. ☐ Medium -- 2.6 sq. ft./gpd
3. ☒ Medium-Large -- 3.3 sq. ft./gpd
4. ☐ Large -- 4.1 sq. ft./gpd
5. ☐ Extra Large -- 5.0 sq. ft./gpd

PUMPING

1. ☒ Not Required
2. ☐ May Be Required
3. ☐ Required >> Specify only for engineered or experimental systems

DOSE: gallons

SITE EVALUATOR STATEMENT

I certify that on 9-17-00 (date) I completed a site evaluation on this property and state that the data reported are accurate and that the proposed system is in compliance with the Maine Subsurface Wastewater Disposal Rules (10-144A CMR 241).

Site Evaluator Signature — SE # 75 — Date 9-28-00

William T. Noble — Site Evaluator Name Printed — (207) 547-3252 Telephone #

STATE OF MAINE WILLIAM T NOBLE #75 LICENSED SITE EVALUATOR

SUBSURFACE WASTEWATER DISPOSAL SYSTEM APPLICATION

Department of Human Services
Division of Health Engineering

Town, City, Plantation: AUGUSTA | Street, Road, Subdivision: RIVERSIDE DRIVE | Owners Name: JOHN L. NIMS

SITE PLAN

Scale 1" = 40 Ft.

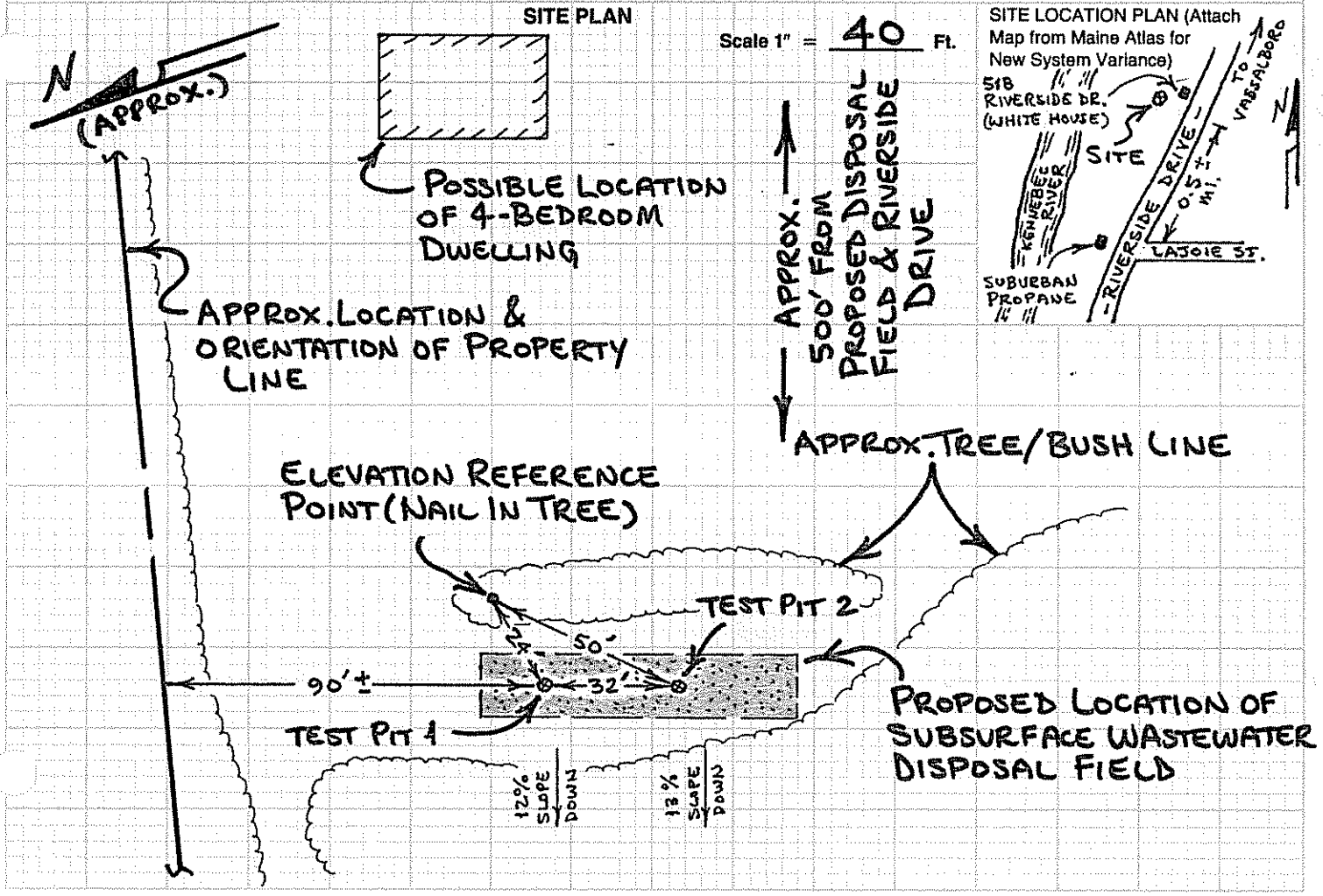

SOIL DESCRIPTION AND CLASSIFICATION (Location of Observation Holes Shown Above)

Observation Hole 1 ☒ Test Pit ☐ Boring

1± " Depth of Organic Horizon Above Mineral Soil

DEPTH BELOW MINERAL SOIL SURFACE (Inches)

Texture	Consistency	Color	Mottling
FINE SANDY LOAM	FRIABLE	DARK BROWN	
		LIGHT OLIVE BROWN	
LOAMY FINE SAND	FIRM	OLIVE	COMMON DISTINCT
		OLIVE BROWN	

Soil	Classification	Slope	Limiting Factor	
3 (Profile)	C (Condition)	~12%	20"	☒ Ground Water ☒ Restrictive Layer ☐ Bedrock

Observation Hole 2 ☒ Test Pit ☐ Boring

1± " Depth of Organic Horizon Above Mineral Soil

DEPTH BELOW MINERAL SOIL SURFACE (Inches)

Texture	Consistency	Color	Mottling
FINE SANDY LOAM	FRIABLE	DARK BROWN	
		LIGHT OLIVE BROWN	
		OLIVE BROWN	
	FIRM	OLIVE	COMMON DISTINCT

Soil	Classification	Slope	Limiting Factor	
3 (Profile)	C (Condition)	~13%	25"	☒ Ground Water ☒ Restrictive Layer ☐ Bedrock

William J. Noble — Site Evaluator Signature

75 — SE#

9-28-00 — Date

Department of Human Services
Division of Health Engineering

SUBSURFACE WASTEWATER DISPOSAL SYSTEM APPLICATION

Town, City, Plantation	Street, Road, Subdivision	Owners Name
AUGUSTA	RIVERSIDE DRIVE	JOHN L. NIMS

SUBSURFACE WASTEWATER DISPOSAL PLAN

Scale 1" = 20 Ft.

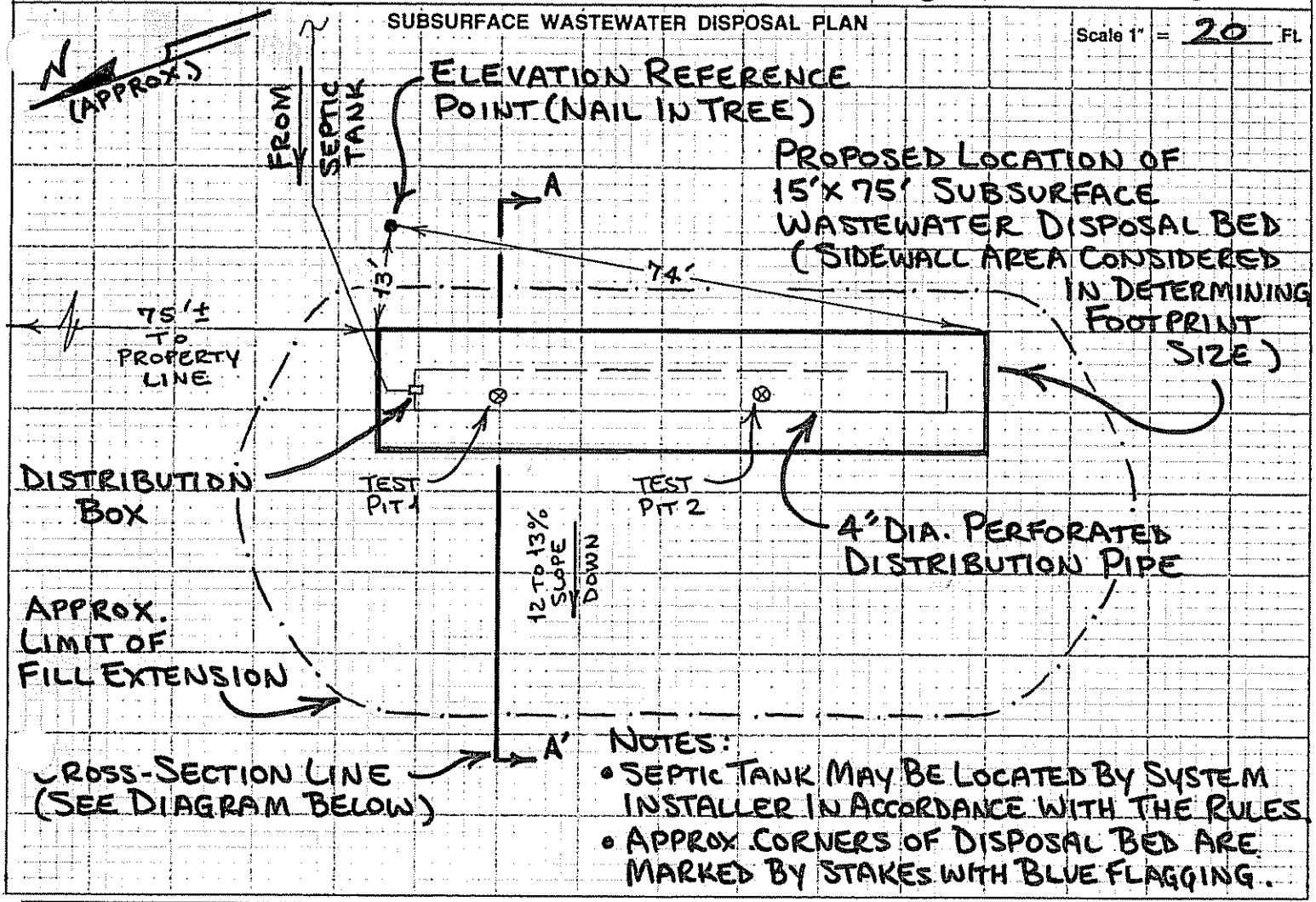

NOTES:
- SEPTIC TANK MAY BE LOCATED BY SYSTEM INSTALLER IN ACCORDANCE WITH THE RULES
- APPROX. CORNERS OF DISPOSAL BED ARE MARKED BY STAKES WITH BLUE FLAGGING.

FILL REQUIREMENTS		CONSTRUCTION ELEVATIONS		ELEVATION REFERENCE POINT
Depth of fill (upslope)	18"	Finished Grade Elevation	-34"	Location & Description: Nail with ORANGE flagging in 9" dia. ASH tree, 17" above ground at base of tree. Reference Elevation is: 0.0"
Depth of Fill (downslope)	42±"	Top of Distribution Pipe or Proprietary Device	-52"	
DEPTHS AT CROSS SECTION A-A' (see below)		Bottom of Disposal Field	-63"	

NOTES:

DISPOSAL AREA CROSS SECTION A-A'

Scale:
Vertical: 1 Inch = 10 Ft.
Horizontal: 1 Inch = 10 Ft.

1. FILL & BACKFILL EXTENSIONS TO BE COARSE SAND TO GRAVELLY COARSE SAND WITH 4 TO 8 % FINES, PER SEC. 804.2 OF THE RULES.
2. GRADE LAND AROUND DISPOSAL FIELD TO DIVERT ANY WATER AWAY FROM THE DISPOSAL AREA.
3. REMOVE ORGANIC LAYER & RAKE OR HARROW THE SOIL SURFACE BEFORE INSTALLING BACKFILL.
4. REQUIRED FILL DEPTHS MAY VARY FROM THOSE SHOWN DUE TO IRREGULARITIES IN SOIL SURFACE.
5. DEPTH OF ☒ CUT ☐ FILL TO BE 8 INCHES AT UPHILL SIDE OF DISPOSAL FIELD OR ROWS.
6. MULCH & SEED FINAL GRADE PER SEC. 806.4 OF THE SSWD RULES (10-144A CMR 241).

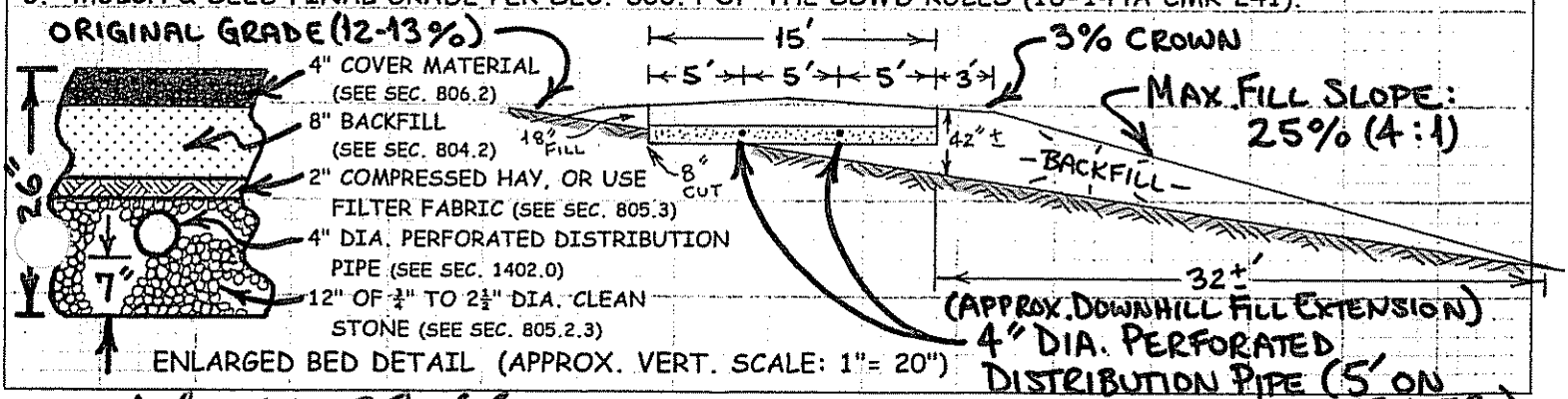

ENLARGED BED DETAIL (APPROX. VERT. SCALE: 1"= 20")

William J. Noble — Site Evaluator Signature
75 — SE#
9-28-00 — Date