# SUBSURFACE WASTEWATER DISPOSAL SYSTEM APPLICATION

Maine Dept Health & Human Services
Div. of Environmental Health, 11SHS
(207)287-5672 FAX (207)287-3165

**PROPERTY LOCATION**

City, Town, or Plantation: AUGUSTA
Street or Road: 439 RIVERSIDE DRIVE
Subdivision, Lot #:

**OWNER/APPLICANT INFORMATION**

Name (last, first, MI): CARRIER, ROGER ■ Owner ☐ Applicant
Mailing Address of Owner/Applicant: 439 RIVERSIDE DRIVE
AUGUSTA, ME 04330
Daytime Tel. #: 207/441-8903

**OWNER OR APPLICANT STATEMENT**

I state that the information submitted is correct to the best of my knowledge and understand that any falsification is reason for the Department and/or Local Plumbing Inspector to deny a Permit.

Roger Carrier 4/29/13
Signature of Owner/Applicant Date

AUGUSTA PERMIT #6778 TOWN COPY
Date Permit Issued: 4/25/13 $ 150.00 fee
15.00
LPI # 850

Municipal Tax Map # 49 Lot # 14

**CAUTION: INSPECTION REQUIRED**

I have inspected the installation authorized above and found it to be in compliance with the Subsurface Wastewater Disposal Rules Application

Local Plumbing Inspector Signature (1st) Date Approved 7/16/13 (2nd) Date Approved

## PERMIT INFORMATION

**TYPE OF APPLICATION**

☐ 1. First Time System
■ 2. Replacement System
Type replaced: STONE BED
Year installed: UNKNOWN
☐ 3. Expanded System
☐ a. <25% Expansion
☐ b. >25% Expansion
☐ 4. Experimental System
☐ 5. Seasonal Conversion

**THIS APPLICATION REQUIRES**

■ 1. No Rule Variance
☐ 2. First Time System Variance
☐ a. Local Plumbing Inspector approval
☐ b. State & Local Plumbing Inspector approval
☐ 3. Replacement System Variance
☐ a. Local Plumbing Inspector approval
☐ b. State & Local Plumbing Inspector approval
☐ 4. Minimum Lot Size Variance
☐ 5. Seasonal Conversion Permit

**DISPOSAL SYSTEM COMPONENTS**

☐ 1. Complete Non-engineered System
☐ 2. Primitive System (graywater & alt. toilet)
☐ 3. Alternative Toilet, specify
☐ 4. Non-Engineered Treatment Tank (only)
☐ 5. Holding Tank, gallons
■ 6. Non-engineered Disposal Field (only)
☐ 7. Separated Laundry System
☐ 8. Complete Engineered System (2000 gpd or more)
☐ 9. Engineered Treatment Tank (only)
☐ 10. Engineered Disposal Field (only)
☐ 11. Pretreatment, specify:
■ 12. Miscellaneous Components

**SIZE OF PROPERTY**

3 ☐ SQ. FT. ■ ACRES

**SHORELAND ZONING**

☐ Yes ■ No

**DISPOSAL SYSTEM TO SERVE:**

■ 1. Single Family Dwelling Unit, No. of Bedrooms: 3
☐ 2. Multiple Family Dwelling Unit, No. of Units:
☐ 3. Other (specify)

Current Use ☐ Seasonal ■ Year Round ☐ Undeveloped

**TYPE OF WATER SUPPLY**

☐ 1. Drilled Well ☐ 2. Dug Well ☐ 3. Private
■ 4. Public ☐ 5. Other

## DESIGN DETAILS (SYSTEM LAYOUT SHOWN ON PAGE 3)

**TREATMENT TANK**

■ 1. Concrete
☐ a. Regular
☐ b. Low Profile
☐ 2. Plastic
☐ 3. Other EXISTING
CAPACITY 1000 GAL.

**DISPOSAL FIELD TYPE & SIZE**

■ 1. Stone Bed ☐ 2. Stone Trench
☐ 3. Proprietary Device
☐ a. cluster array ☐ c. Linear
☐ b. regular load ☐ d. H-20 load
☐ 4. Other
SIZE 900 ■ sq. ft. ☐ lin. ft.

**GARBAGE DISPOSAL UNIT**

■ 1. No ☐ 2. Yes ☐ 3. Maybe
If Yes or Maybe, specify one below:
☐ a. multi-compartment tank
☐ b. tanks in series
☐ c. increase in tank capacity
☐ d. Filter on Tank Outlet

**DESIGN FLOW**

270 gallons per day
BASED ON:
■ 1. Table 4A (dwelling unit(s))
☐ 2. Table 4C (other facilities)
SHOW CALCULATIONS for other facilities
☐ 3. Section 4G (meter readings)
ATTACH WATER METER DATA

**SOIL DATA & DESIGN CLASS**

PROFILE CONDITION
3 / C
Test Observation Hole # TP-1
Depth 17 "
of Most Limiting Soil Factor

**DISPOSAL FIELD SIZING**

☐ 1. Medium - 2.6 sq. ft./gpd
■ 2. Medium-Large - 3.3 sq. ft./gpd
☐ 3. Large - 4.1 sq. ft./gpd
☐ 4. Extra-Large - 5.0 sq. ft./gpd

**EFFLUENT/EJECTOR PUMP**

☐ 1. Not Required
☐ 2. May Be Required
■ 3. Required
Specify only for engineered systems
DOSE gallons

**LATITUDE AND LONGITUDE**
at center of disposal area
Lat. 44 d 20 m 39 s
Lon. 69 d 45 m 07 s
if gps, state margin of error: 30 ft

## SITE EVALUATOR'S STATEMENT

Certify that on 4/4/13 (date) I completed a site evaluation on this property and state that the data reported are accurate and that the proposed system is in compliance with the State of Maine Subsurface Wastewater Disposal Rules (10-144A CMR 241).

William P Brown 188 4/4/2013
Site Evaluator Signature SE# Date

# SUBSURFACE WASTEWATER DISPOSAL SYSTEM APPLICATION

Maine Department of Human Services
Division of Health Engineering, Station 10
(207) 287-5672 FAX 207 287-4165

| Town, City, Plantation | Street, Road, Subdivision | Owner or Applicant Name |
|---|---|---|
| AUGUSTA | 439 RIVERSIDE DRIVE | ROGER CARRIER |

SITE PLAN — Scale 1" = 100 Ft.

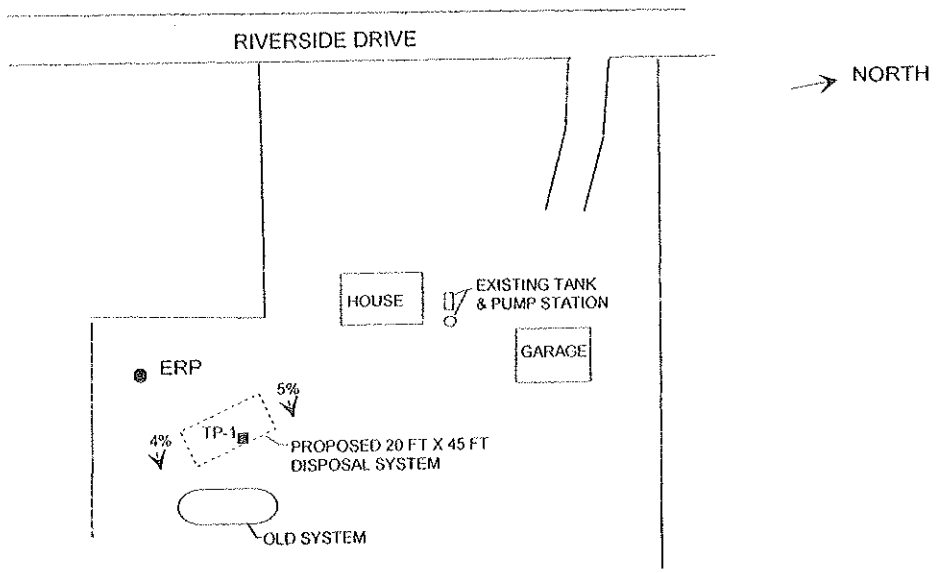


SITE LOCATION PLAN
(Attach map from Maine Atlas for First Time System Variance)

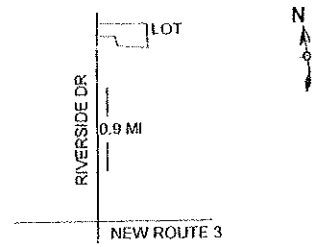


ERP TO TP-1 = 57'

THE PROPOSAL IS TO KEEP THE EXISTING SEPTIC TANK IN SERVICE THE EFFLUENT BAFFLE WILL BE CHECKED AND REPLACED WITH A "POLY-LOC" EFFLUENT FILTER IF THE BAFFLE IS DETERIORATED.
THE EXISTING PUMP STATION APPEARS TO LEAKING WATER AT THE SEAM AND AT THE FORCE MAIN OUTLET. THE TANK WILL BE REPLACE WITH A NEW 3 FOOT DIAMETER TANK. THE EXISTING PUMP WILL BE RE-USED.
A 20 BY 45 FOOT CRUSHED STONE DISPOSAL SYSTEM WILL BE INSTALLED AS SHOWN.

## SOIL PROFILE DESCRIPTION AND CLASSIFICATION (Location of Observation Holes Shown Above)

Observation Hole # TP-1 ■ Test Pit ☐ Boring

0 " Depth of organic horizon above mineral soil

DEPTH BELOW MINERAL SOIL SURFACE (Inches)

| Texture | Consistancy | Color | Mottling |
|---|---|---|---|
| SANDY LOAM | FRIABLE | BROWN | |
| | | YELLOWISH BROWN | NONE |
| | | | COMMON |
| | FIRM | OLIVE BROWN | |

| Soil Profile | Classification Condition | Slope Percent | Limiting Factor Depth | |
|---|---|---|---|---|
| 3 | C | 4-5 % | 17 " | ■ Groundwater ☐ Restrictive Layer ☐ Bedrock |

Observation Hole # _____ ☐ Test Pit ☐ Boring

" Depth of organic horizon above mineral soil

DEPTH BELOW MINERAL SOIL SURFACE (Inches)

| Texture | Consistancy | Color | Mottling |
|---|---|---|---|
| | | | |

| Soil Profile | Classification Condition | Slope Percent | Limiting Factor Depth | |
|---|---|---|---|---|
| | | % | " | ☐ Groundwater ☐ Restrictive Lay ☐ Bedrock |

# SUBSURFACE WASTEWATER DISPOSAL SYSTEM APPLICATION

Maine Department of ... Division of Health Engineering, Station 10

| Town, City, Plantation | Street, Road, Subdivision | Owner or Applicant Name |
|---|---|---|
| AUGUSTA | RIVERSIDE DRIVE | ROGER CARRIER |

## SUBSURFACE WASTEWATER DISPOSAL PLAN

Scale 1" 20' Ft.

KEEP EXISTING SEPTIC TANK IN SERVICE. CHECK EFFLENT BAFFLE. IF DETERIORATED, REPLACE WITH "POLY-LOC" EFFLUENT FILTER.
REPLACE EXISTING PUMP TANK WITH NEW 3 FOOT DIAMETER TANK WITH 3 FOOT DIAMETER RISER. RE-USE EXISTING PUMP.
INSTALL FORCE MAIN TO NEW D-BOX. ENTER D-BOX THROUGH BOTTOM WITH FORCE MAIN AND EXTEND PIPE TO WITHIN 2 INCHES OF COVER.

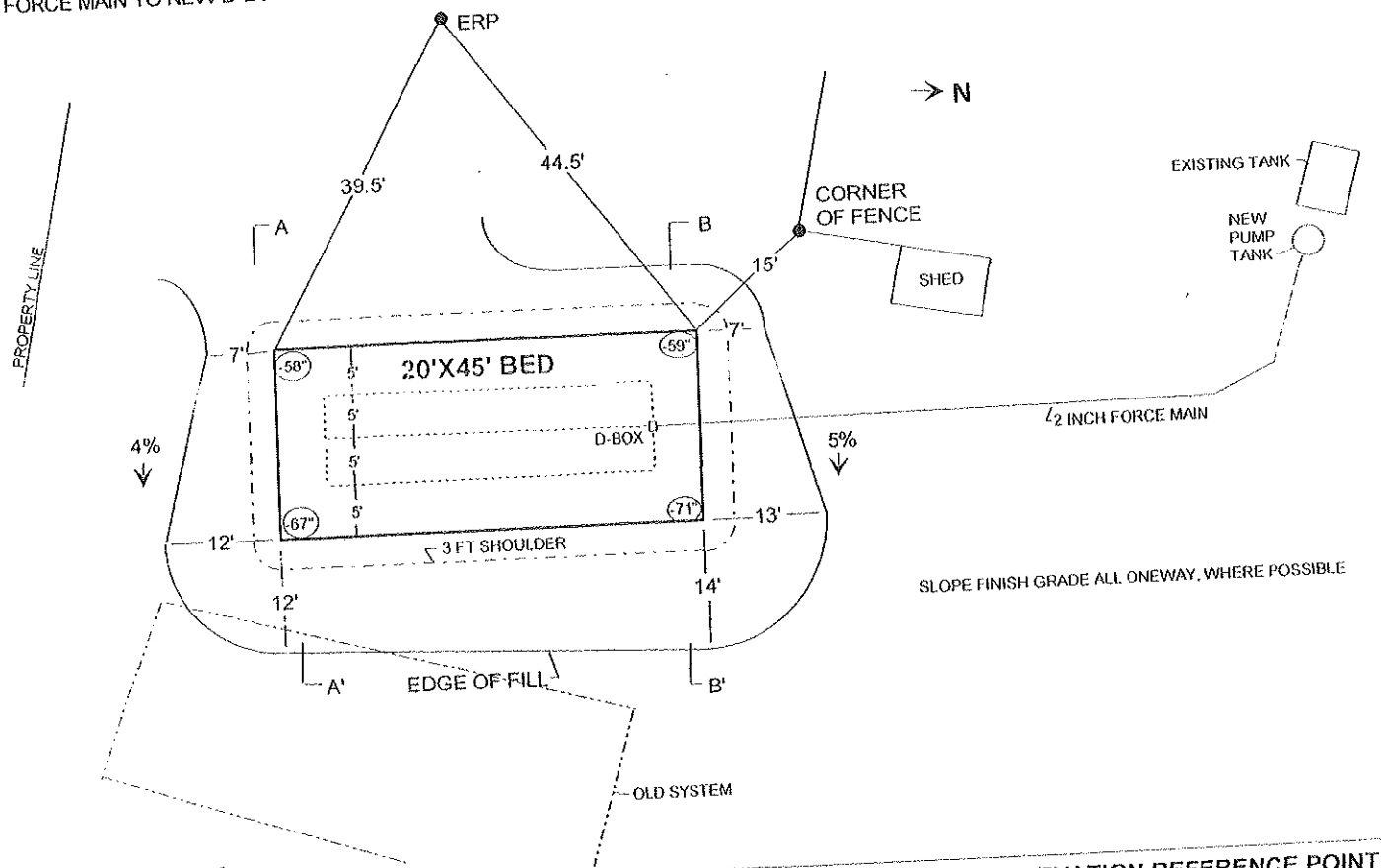


(-58") ORIGINAL GROUND ELEVATIONS

| BACKFILL REQUIREMENTS | | CONSTRUCTION ELEVATIONS | | ELEVATION REFERENCE POINT |
|---|---|---|---|---|
| Depth of Fill (Upslope) | 19-20 " | Finished Grade Elevation(AT MAX. POINT) | -39" | Location and Description: FLAGGED NAIL IN 6 INCH DIAMETEI |
| Depth of Fill (Downslope) | 28-32 " | Top of Distribution Pipe or Proprietary device | -52" | HARDWOOD, 2 FEET ABOVE GROU |
| DEPTHS AT CROSS-SECTION (shown below) | | Bottom of Disposal Area | -63" | Reference Elevation is: 00.0" |

## DISPOSAL AREA CROSS SECTION

Scale:
Vertical: 1 inch = 5
Horizontal: 1 inch = 10

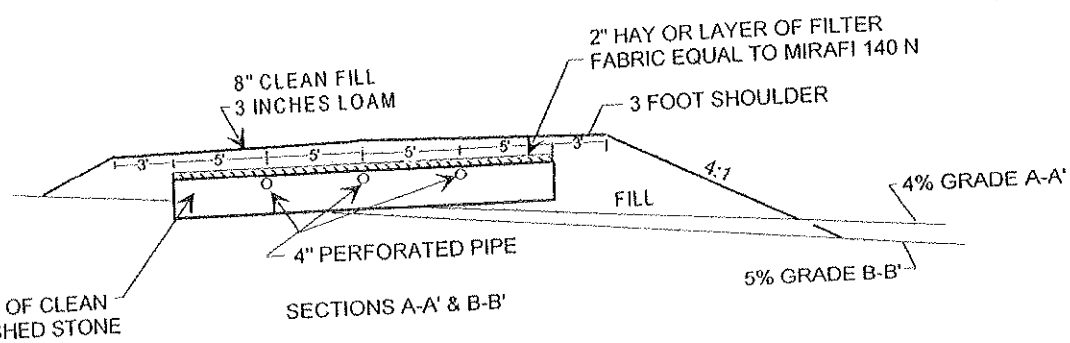


REMOVE STUMPS AND VEGETATION IN DISPOSAL AREA
SCARIFY ENTIRE FILL EXTENSION AREA
MIX 4 INCHES OF FILL MATERIAL THOROUGHLY WITH EXISTING SOIL TO FORM
A TRANSITION ZONE (ACCORDING TO SECTION 11, PLUMBING CODE)
ALL FILL SHALL BE GRAVELLY COARSE SAND
SLOPE FINISH GRADE ALL ONE-WAY, WHERE POSSIBLE
LOAM, SEED, MULCH DISTURBED AREAS

WILLIAM P BROWN William P Brown — 188 — 4/4/2013
Site Evaluator Signature — SE # — Date