MUA 159

# SUBSURFACE WASTEWATER DISPOSAL SYSTEM APPLICATION

Department of Human Services
Division of Health Engineering
(207)289-3826

## PROPERTY ADDRESS

| | |
|---|---|
| Town Or Plantation | AUGUSTA Birch Canoe Trail |
| Street Subdivision Lot # | FOX GLEN DEVELOPMENT; THREE CORNERED POND - LOTS 120, 121, 343, 344 |

## PROPERTY OWNERS NAME

10-331 + 10-330

Last: TABRE, ET AL First: EDDY

617 246-2261

| | |
|---|---|
| Applicant Name: | Steven T. Hesser |
| Mailing Address of Owner/Applicant (If Different) | ~~16 GROVE ST. WINCHESTER, MASS. 01890~~ 332 water St Wakefield MA 01880 |

AUGUSTA Cautious Permit Application 2159 TOWN COPY

Date Permit Issued: 5 13 91 $ 140.00 FEE ☐ If Double Fee Charged

Local Plumbing Inspector Signature L.P.I. # 108

### Owner/Applicant Statement

*I certify that the Information submitted is correct to the best of my knowledge and understand that any falsification is reason for the Local Plumbing Inspector to deny a Permit.*

x [signature] 5/3/91

Signature of Owner/Applicant — Date

### Caution: Inspection Required

*I have inspected the installation authorized above and found it to be in compliance with the Subsurface Wastewater Disposal Rules.*

Local Plumbing Inspector Signature — Date Approved

## PERMIT INFORMATION

**THIS APPLICATION IS FOR:**
1. ☒ NEW SYSTEM
2. ☐ REPLACEMENT SYSTEM
3. ☐ EXPANDED SYSTEM
4. ☐ EXPERIMENTAL SYSTEM

**SEASONAL CONVERSION**
to be completed by the LPI
5. ☐ SYSTEM COMPLIES WITH RULES
6. ☐ CONNECTED TO SANITARY SEWER
7. ☐ SYSTEM INSTALLED – P# _____
8. ☐ SYSTEM DESIGN RECORDED AND ATTACHED

**IF REPLACEMENT SYSTEM:**
YEAR FAILING SYSTEM INSTALLED _____
THE FAILING SYSTEM IS:
1. ☐ BED 3. ☐ TRENCH
2. ☐ CHAMBER 4. ☐ OTHER: _____

**THIS APPLICATION REQUIRES:**
1. ☒ NO RULE VARIANCE
2. ☐ NEW SYSTEM VARIANCE Attach New System Variance Form
3. ☐ REPLACEMENT SYSTEM VARIANCE Attach Replacement System Variance Form
a. ☐ Requiring Local Plumbing Inspector Approval
b. ☐ Requires State and Local Plumbing Inspector Approval
4. ☐ MINIMUM LOT SIZE VARIANCE

**DISPOSAL SYSTEM TO SERVE:**
1. ☒ SINGLE FAMILY DWELLING
2. ☐ MODULAR OR MOBILE HOME
3. ☐ MULTIPLE FAMILY DWELLING
4. ☐ OTHER _____ SPECIFY

**INSTALLATION IS:**
COMPLETE SYSTEM
1. ☒ NON-ENGINEERED SYSTEM
2. ☐ PRIMITIVE SYSTEM (Includes Alternative Toilet)
3. ☐ ENGINEERED (+2000 gpd)
INDIVIDUALLY INSTALLED COMPONENTS:
4. ☐ TREATMENT TANK (ONLY)
5. ☐ HOLDING TANK _____ GAL
6. ☐ ALTERNATIVE TOILET (ONLY)
7. ☐ NON-ENGINEERED DISPOSAL AREA (ONLY)
8. ☐ ENGINEERED DISPOSAL AREA (ONLY)
9. ☐ SEPARATED LAUNDRY SYSTEM

| SIZE OF PROPERTY | ZONING | TYPE OF WATER SUPPLY |
|---|---|---|
| 1.7± ACRES | SHORELAND | DRILLED WELL (PROPOSED) |

## DESIGN DETAILS (SYSTEM LAYOUT SHOWN ON PAGE 3)

**TREATMENT TANK**
1. ☒ SEPTIC: ☒ Regular ☒ Low Profile ?
2. ☐ AEROBIC
SIZE: 1000 GALS.

**WATER CONSERVATION**
1. ☒ NONE
2. ☐ LOW VOLUME TOILET
3. ☐ SEPARATED LAUNDRY SYSTEM
4. ☐ ALTERNATIVE TOILET
SPECIFY: _____

**PUMPING**
1. ☐ NOT REQUIRED
2. ☐ MAY BE REQUIRED (DEPENDING ON TREATMENT TANK LOCATION AND ELEVATION)
3. ☒ REQUIRED
DOSE: 75± GALS.

**CRITERIA USED FOR DESIGN FLOW (BEDROOMS, SEATING, EMPLOYEES, WATER RECORDS, ETC.)**
3 BEDROOM SINGLE FAMILY DWELLING
DESIGN FLOW: 270 (GALLONS/DAY)

**SOIL CONDITIONS USED FOR DESIGN PURPOSES**

| PROFILE | CONDITION |
|---|---|
| 3 | C |

DEPTH TO LIMITING FACTOR: 20

**SIZE RATINGS USED FOR DESIGN PURPOSES**
1. ☐ SMALL
2. ☐ MEDIUM
3. ☒ MEDIUM-LARGE
4. ☐ LARGE
5. ☐ EXTRA LARGE

**DISPOSAL AREA TYPE/SIZE**
1. ☐ BED _____ Sq. Ft.
2. ☒ CHAMBER 480 Sq. Ft. ☒ REGULAR ☐ H-20
3. ☐ TRENCH _____ Linear Ft.
4. ☐ OTHER: _____

### SITE EVALUATOR STATEMENT

On 9/24/87 + 1/12/88 (date) I conducted a site evaluation for this project and certify that the data reported is accurate. The system I propose is in accordance with the Subsurface Wastewater Disposal Rules.

[signature] — Site Evaluator Signature
168 — SE#
4/21/88 — Date

(Local Plumbing Inspector's Signature if permit is for Seasonal Conversion.)

# SUBSURFACE WASTEWATER DISPOSAL SYSTEM APPLICATION

Department of Human Services
Division of Health Engineering

Town, City, Plantation: AUGUSTA

Street, Road, Subdivision: FOX GLEN DEVELOPMENT 10-331
THREE CORNERED POND LOTS 120, 121, 343, 344, 10-330

Owners Name: EDDY TABRE ET AL

## SITE PLAN

Scale 1" = 100 Ft.

SITE LOCATION PLAN (Attach Map from Maine Atlas for New System Variance)

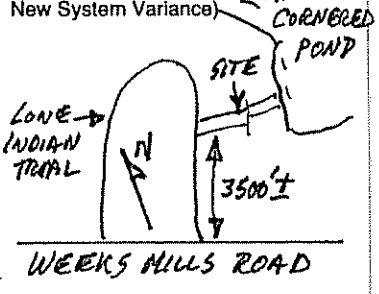


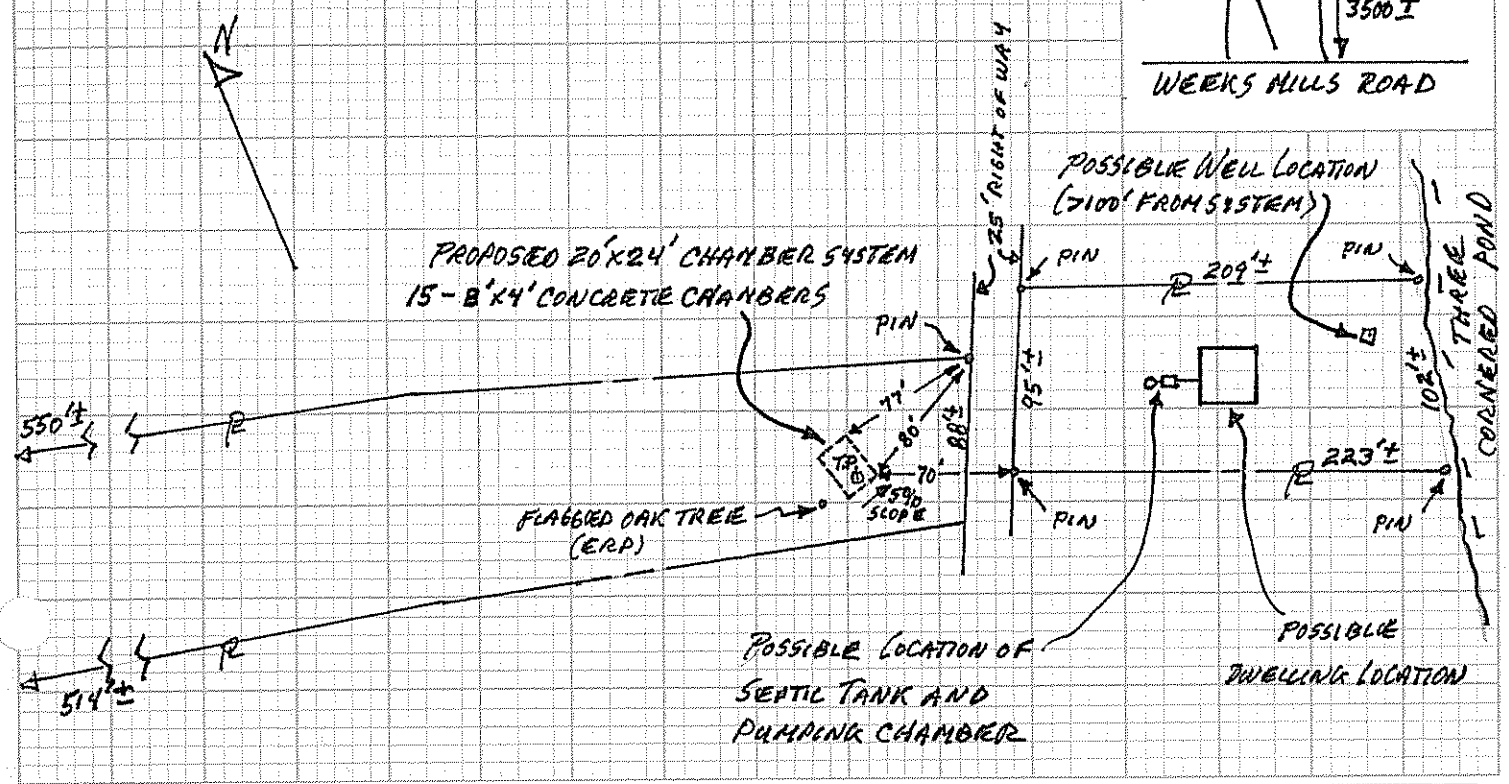


## SOIL DESCRIPTION AND CLASSIFICATION (Location of Observation Holes Shown Above)

Observation Hole # B-15 ☒ Test Pit ☐ Boring

ONE " Depth of Organic Horizon Above Mineral Soil

| Depth below mineral soil surface (inches) | Texture | Consistency | Color | Mottling |
|---|---|---|---|---|
| 0–6 | | | ORANGE BROWN | |
| 6–15 | SANDY | FRIABLE | YELLOW BROWN | |
| 15–30 | LOAM | | GRAY | COMMON |
| 30–50 | | FIRM | BROWN | DISTINCT |

| Soil | Classification | Slope | Limiting Factor |
|---|---|---|---|
| 3 (Profile) | C (Condition) | 5 % | 20 ☒ Ground Water ☐ Restrictive Layer ☐ Bedrock |

Observation Hole _____ ☐ Test Pit ☐ Boring

_____ " Depth of Organic Horizon Above Mineral Soil

| Depth below mineral soil surface (inches) | Texture | Consistency | Color | Mottling |
|---|---|---|---|---|
| 0–50 | | | | |

| Soil | Classification | Slope | Limiting Factor |
|---|---|---|---|
| (Profile) | (Condition) | % | ☐ Ground Water ☐ Restrictive Layer ☐ Bedrock |

Site Evaluator Signature: John A. [illegible]

SE#: 168

Date: 1/21/88

# SUBSURFACE WASTEWATER DISPOSAL SYSTEM APPLICATION

Department of Human Services
Division of Health Engineering

| Town, City, Plantation | Street, Road, Subdivision | Owners Name |
|---|---|---|
| AUGUSTA | FOX GLEN DEVELOPMENT 10-331<br>THREE CORNERED POND LOTS 120,121,343,344,10-330 | EDDY TABRE ET AL |

## SUBSURFACE WASTEWATER DISPOSAL PLAN

Scale 1" = 20 Ft.

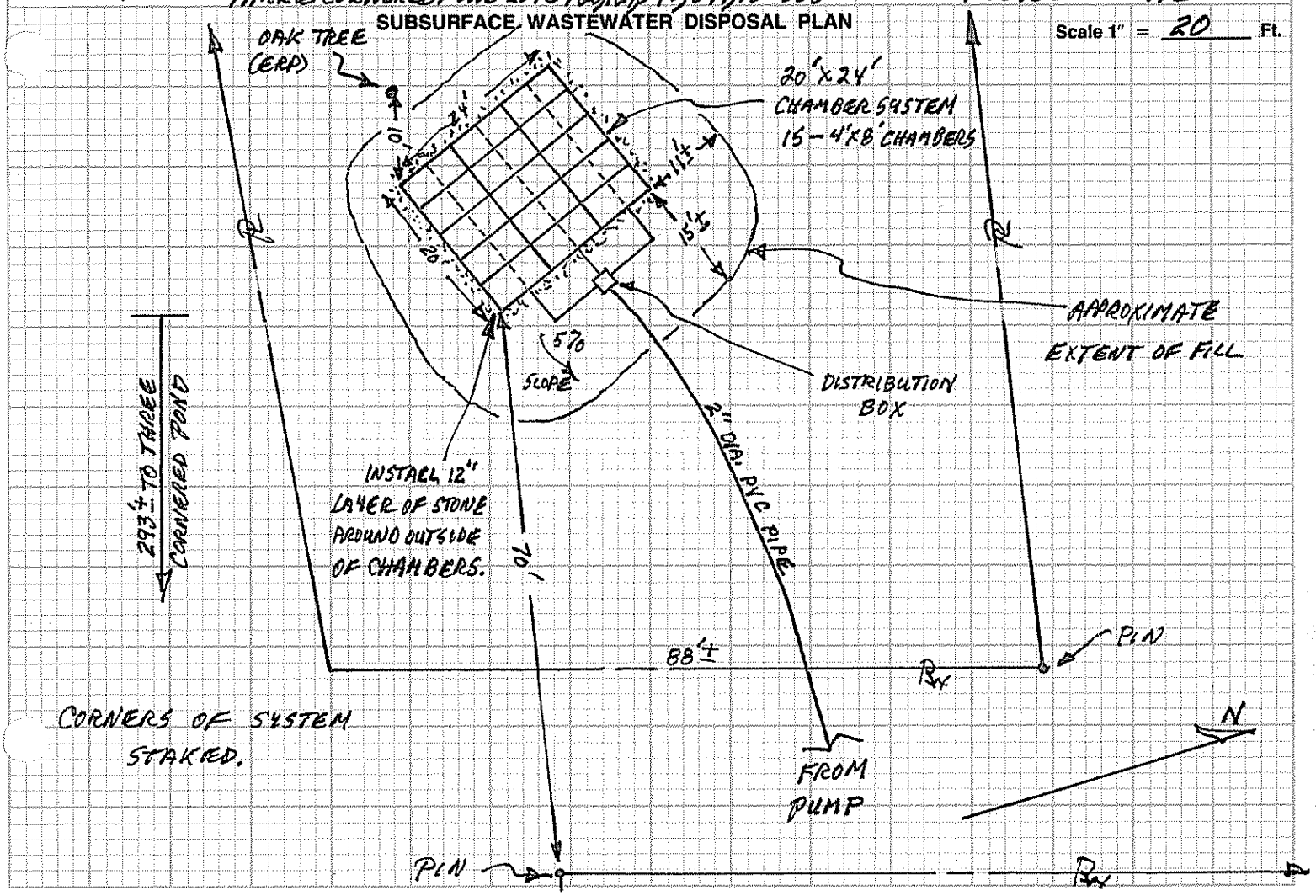


| FILL REQUIREMENTS | | CONSTRUCTION ELEVATIONS | | ELEVATION REFERENCE POINT LOCATION & DESCRIPTION |
|---|---|---|---|---|
| Depth of Fill (Upslope) | 13" | Reference Elevation is | 0 | -58" FLAGGED NAIL IN OAK TREE 39" |
| Depth of Fill (Downslope) | 25±" | Bottom of Disposal Area | | -45" ABOVE EXISTING GRADE AT TREE. |
| | | Top of ~~Distribution Lines or~~ Chambers | | |

## DISPOSAL AREA CROSS SECTION

Scale:
Vertical: 1 Inch = 5 Ft.
Horizontal: 1 Inch = 10 Ft.

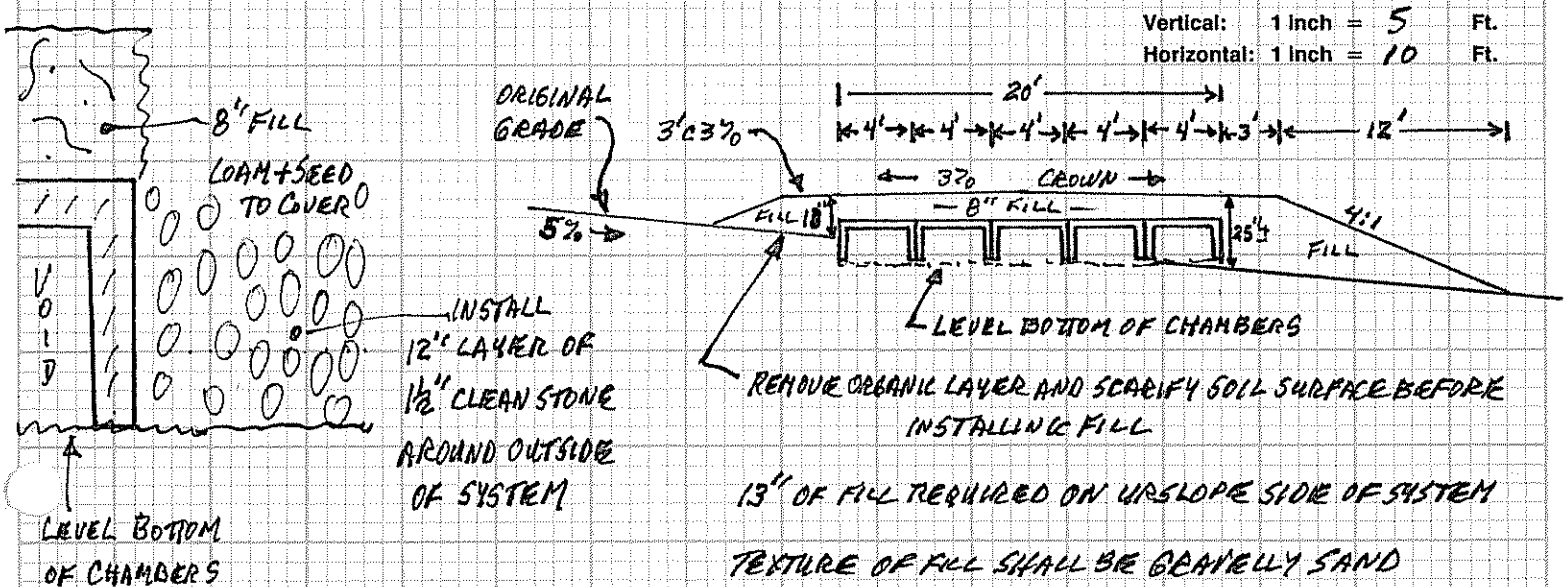


13" OF FILL REQUIRED ON UPSLOPE SIDE OF SYSTEM

TEXTURE OF FILL SHALL BE GRAVELLY SAND
LOAM + SEED TO COVER.

| Site Evaluator Signature | SE# | Date |
|---|---|---|
| [signature] | 168 | 1/21/88 |