SUBSURFACE WASTEWATER DISPOSAL SYSTEM APPLICATION

Maine Dept ofHealth & Human Services
Division of Health Engineering, 10SHS
(207)287-5672 FAX (207)287-3165

PROPERTY LOCATION

>> CAUTION: PERMIT REQUIRED -- ATTACH IN SPACE BELOW <<

ty, Town, r Plantation	AUGUSTA 885
Street or Road	ROUTE 17 Eastern Ave
Subdivision, Lot #	

AUGUSTA PERMIT # 6146 TOWN COPY

Date Permit Issued: 4/15/08 $ 100.00 ☐ If Double Fee Charged FEE

Local Plumbing Inspector Signature L.P.I. # 850

OWNER/APPLICANT INFORMATION

Name (last, first, MI) BOUCHER, RICHARD ■ Owner ☐ Applicant

Mailing Address of Owner/Applicant: 152 MUD MILL ROAD, AUGUSTA, ME 04330

Daytime Tel. # 207/588-0474

Municipal Tax Map # 15 Lot # 7A

OWNER OR APPLICANT STATEMENT

I state that the information submitted is correct to the best of my knowledge and understand that any falsification is reason for the Department and/or Local Plumbing Inspector to deny a Permit.

Signature of Owner/Applicant Date

CAUTION: INSPECTION REQUIRED

I have inspected the installation authorized above and found it to be in compliance with the Subsurface Wastewater Disposal Rules Application

Local Plumbing Inspector Signature (1st) Date Approved 7/17/08 (2nd) Date Approved

PERMIT INFORMATION

TYPE OF APPLICATION

- ■ 1. First Time System
- ☐ 2. Replacement System
  - Type replaced ____
  - Year installed ____
- ☐ 3. Expanded System
  - ☐ a. Minor Expansion
  - ☐ b. Major Expansion
- ☐ 4. Experimental System
- ☐ 5. Seasonal Conversion

THIS APPLICATION REQUIRES

- ■ 1. No Rule Variance
- ☐ 2. First Time System Variance
  - ☐ a. Local Plumbing Inspector approval
  - ☐ b. State & Local Plumbing Inspector approval
- ☐ 3. Replacement System Variance
  - ☐ a. Local Plumbing Inspector approval
  - ☐ b. State & Local Plumbing Inspector approval
- ☐ 4. Minimum Lot Size Variance
- ☐ 5. Seasonal Conversion Permit

DISPOSAL SYSTEM COMPONENTS

- ■ 1. Complete Non-engineered System
- ☐ 2. Primitive System (graywater & alt. toilet)
- ☐ 3. Alternative Toilet, specify ____
- ☐ 4. Non-Engineered Treatment Tank (only)
- ☐ 5. Holding Tank, ____ gallons
- ☐ 6. Non-engineered Disposal Field (only)
- ☐ 7. Separated Laundry System
- ☐ 8. Complete Engineered System (2000 gpd or more)
- ☐ 9. Engineered Treatment Tank (only)
- ☐ 10. Engineered Disposal Field (only)
- ☐ 11. Pretreatment, specify: ____
- ☐ 12. Miscellaneous Components

SIZE OF PROPERTY

1.6 ☐ sq. ft. ■ acres

SHORELAND ZONING

☐ Yes ■ No

DISPOSAL SYSTEM TO SERVE:

- ■ 1. Single Family Dwelling Unit, No. of Bedrooms: 3
- ☐ 2. Multiple Family Dwelling Unit, No. of Units: ____
- ☐ 3. Other ____ (specify)

Current Use ☐ Seasonal ☐ Year Round ■ Undeveloped

TYPE OF WATER SUPPLY

- ■ 1. Drilled Well
- ☐ 2. Dug Well
- ☐ 3. Private
- ☐ 4. Public
- ☐ 5. Other

DESIGN DETAILS (SYSTEM LAYOUT SHOWN ON PAGE 3)

TREATMENT TANK

- ■ 1. Concrete
  - ■ a. Regular
  - ☐ b. Low Profile
- ☐ 2. Plastic
- ☐ 3. Other ____

CAPACITY 1000 GAL.

DISPOSAL FIELD TYPE & SIZE

- ■ 1. Stone Bed
- ☐ 2. Stone Trench
- ☐ 3. Proprietary Device
  - ☐ a. cluster array
  - ☐ c. Linear
  - ☐ b. regular load
  - ☐ d. H-20 load
- ☐ 4. Other ____

SIZE 1400 ■ sq. ft. ☐ lin. ft.

GARBAGE DISPOSAL UNIT

1. ■ No
2. ☐ Yes >>Specify one below:
   - ☐ a. multi-compartment tank
   - ☐ b. ____ tanks in series
   - ☐ c. Increase in tank capacity
   - ☐ d. Filter on Tank Outlet
3. ☐ Maybe

DESIGN FLOW

270 gallons per day

BASED ON:

- ■ 1. Table 501.1 (dwelling unit(s))
- ☐ 2. Table 501.2 (other facilities)

SHOW CALCULATIONS -for other facilities-

☐ 3. Section 503.0 (meter readings)

ATTACH WATER METER DATA

SOIL DATA & DESIGN CLASS

PROFILE CONDITION DESIGN

3 / D / 3

at Observation Hole # TP-1

Depth 12 "

of Most Limiting Soil Factor

DISPOSAL FIELD SIZING

1. ☐ Small - 2.0 sq. ft./gpd
2. ☐ Medium - 2.6 sq. ft./gpd
3. ☐ Medium-Large - 3.3 sq. ft./gpd
4. ☐ Large - 4.1 sq. ft./gpd
5. ■ Extra-Large - 5.0 sq. ft./gpd

EFFLUENT/EJECTOR PUMP

1. ■ Not Required
2. ☐ May Be Required
3. ☐ Required>> Specify only for engineered or experimental systems

DOSE ____ gallons

LATITUDE AND LONGITUDE

at center of disposal srea

Lat. 44 d 17 m 06 s

Long. 69 d 41 m 44 s

if gps, state margin of error: 30 ft

SITE EVALUATOR'S STATEMENT

I certify that on 4/21/08 (date) I completed a site evaluation on this property and state that the data reported are accurate and that the proposed system is in compliance with the State of Maine Subsurface Wastewater Disposal Rules (10-144A CMR 241).

William P Brown — Site Evaluator Signature

188 — SE#

4/21/2008 — Date

WILLIAM P BROWN — Site Evaluator Name Printed

293-2110 — Telephone Number

E-mail Address

Note: Changes to or deviations from the design should be confirmed with the Site Evaluator.

SUBSURFACE WASTEWATER DISPOSAL SYSTEM APPLICATION

Maine Department of Human Services
Division of Health Engineering, Station 10
(207) 287-5672 FAX 207 287-4165

Town, City, Plantation	Street, Road, Subdivision	Owner or Applicant Name
AUGUSTA	ROUTE 17	RICHARD BOUCHER

SITE PLAN

Scale 1" = 50 Ft.

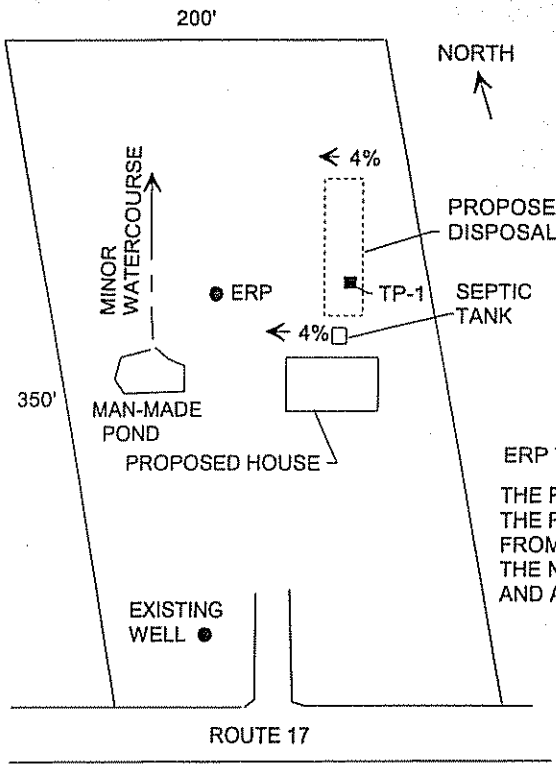

ERP TO TP-1 = 65'

THE PROPOSED HOUSE WILL BE LOCATED AT LEAST 20 FEET FROM THE DISPOSAL SYSTEM.
THE PROPOSED SYSTEM IS 102 FEET FROM A NEIGHBOR'S WELL AND OVER 100 FEET FROM THE OWNER'S WELL.
THE NEW SEPTIC TANK WILL BE FIELD ADJUSTED AT LEAST 8 FEET FROM THE BUILDING AND AT LEAST 100 FEET FROM THE NEIGHBOR'S WELL.

THE PROPOSED SYSTEM IS 61 FT FROM A MINOR WATERCOURSE.

SITE LOCATION PLAN
(Attach map from Maine Atlas for First Time System Variance)

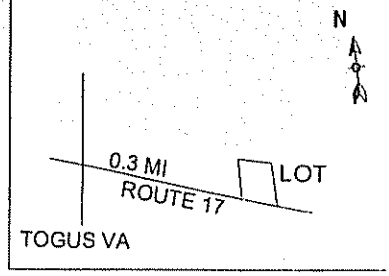

SOIL PROFILE DESCRIPTION AND CLASSIFICATION (Location of Observation Holes Shown Above)

Observation Hole # TP-1 ■ Test Pit ☐ Boring

1 " Depth of organic horizon above mineral soil

DEPTH BELOW MINERAL SOIL SURFACE (Inches)	Texture	Consistancy	Color	Mottling
0–10	LOAM	FRIABLE	MEDIUM BROWN	
10–20	SILT CLAY LOAM	FIRM	LIGHT BROWN OLIVE BRN	NONE COMMON
20–50				

Soil Profile	Classification Condition	Slope Percent	Limiting Factor Depth	
9	D	4 %	12 "	■ Groundwater ☐ Restrictive Layer ☐ Bedrock

Observation Hole # _____ ☐ Test Pit ☐ Boring

_____ " Depth of organic horizon above mineral soil

DEPTH BELOW MINERAL SOIL SURFACE (Inches)	Texture	Consistancy	Color	Mottling
0–50				

Soil Profile	Classification Condition	Slope Percent	Limiting Factor Depth	
		%	"	☐ Groundwater ☐ Restrictive Layer ☐ Bedrock

WILLIAM P BROWN *William P Brown* 188 4/21/2008
Site Evaluator Signature SE # Date

SUBSURFACE WASTEWATER DISPOSAL SYSTEM APPLICATION

Maine Department of Human Services
Division of Health Engineering, Station 10

Town, City, Plantation	Street, Road, Subdivision	Owner or Applicant Name
AUGUSTA	ROUTE 17	RICHARD BOUCHER

SUBSURFACE WASTEWATER DISPOSAL PLAN

Scale 1" 20' Ft.

HOUSE WITH FULL FOUNDATION MUST BE AT LEAST 20 FEET FROM DISPOSAL SYSTEM
SEPTIC TANK MAY BE FIELD ADJUSTED AT LEAST 8 FT FROM HOUSE AND AT LEAST 100 FT FROM NEIGHBOR'S WELL.
USE 4 INCH SCHEDULE 40 PVC FROM HOUSE TO TANK.
USE SDR 35 PIPE FROM TANK TO D-BOX.

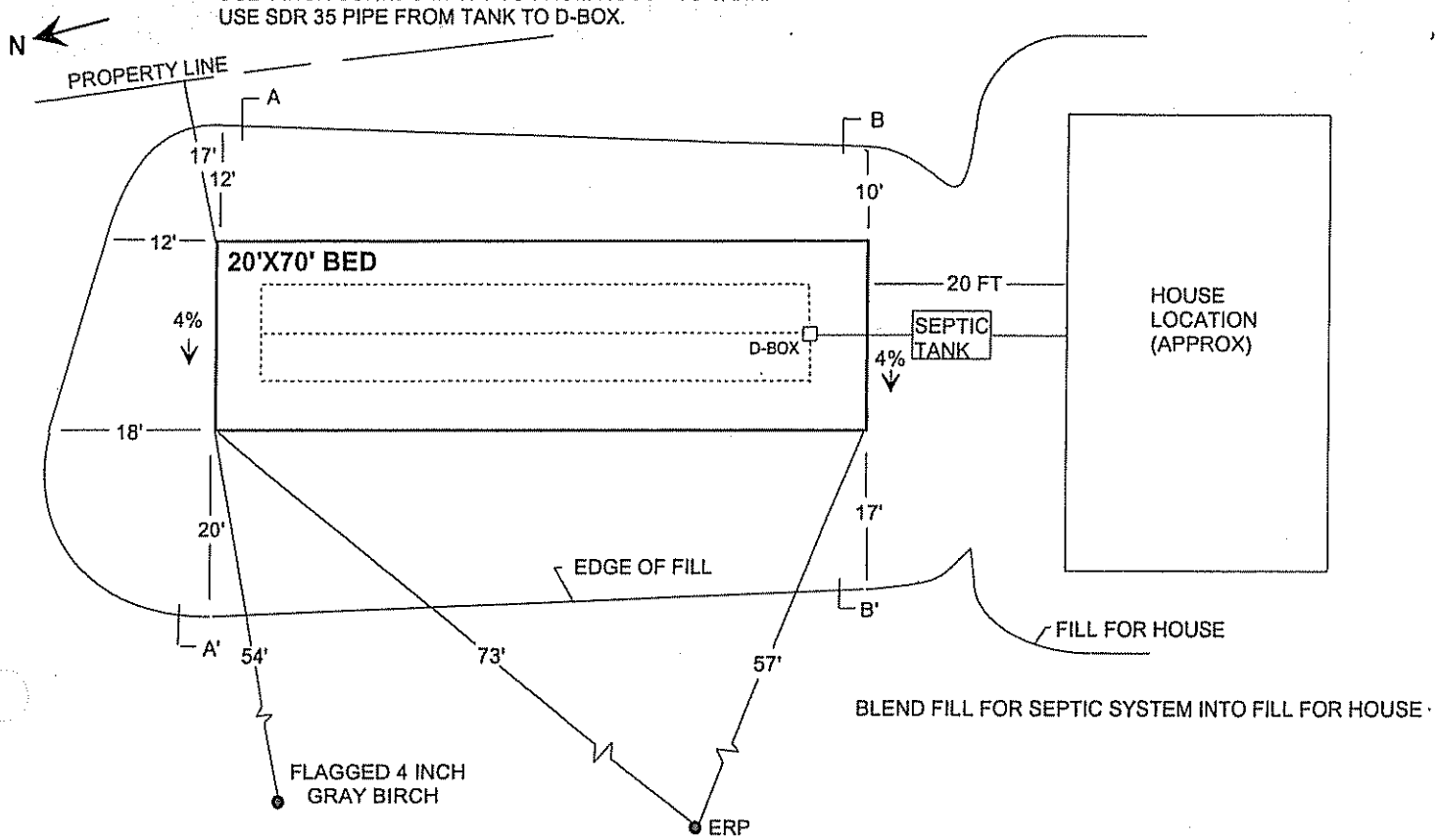

BACKFILL REQUIREMENTS

Depth of Fill (Upslope)	30-36"
Depth of Fill (Downslope)	39-46"

DEPTHS AT CROSS-SECTION (shown below)

CONSTRUCTION ELEVATIONS

Finished Grade Elevation	VARIES
Top of Distribution Pipe or Proprietary device	-05"
Bottom of Disposal Area	-16"

ELEVATION REFERENCE POINT

Location and Description:
FLAGGED NAIL IN 4 INCH GRAY BIRCH TREE, 5 FEET ABOVE GROUND
Reference Elevation is: 00.0"

DISPOSAL AREA CROSS SECTION

Scale:

Vertical:	1 Inch =	5	Ft.
Horizontal:	1 Inch =	10	Ft.

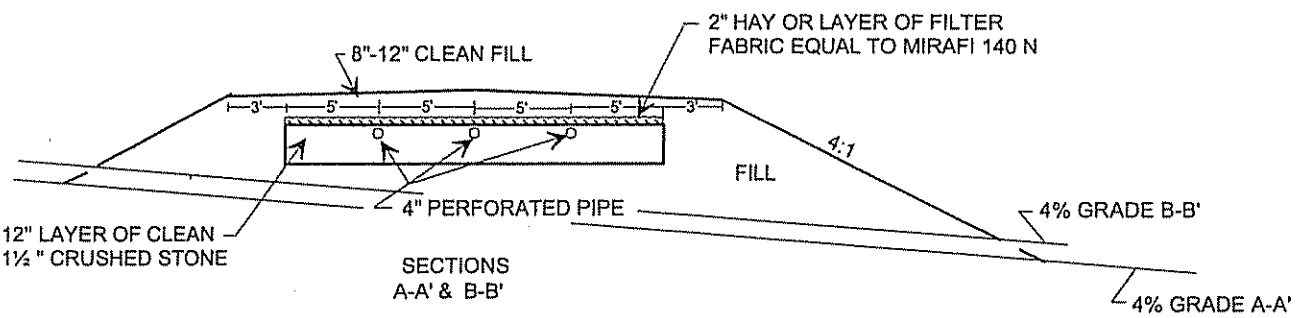

REMOVE VEGETATION IN DISPOSAL AREA
\RIFY ENTIRE FILL AREA
\ 4 INCHES OF FILL MATERIAL THOROUGHLY WITH EXISTING SOIL TO FORM A TRANSITION ZONE (ACCORDING TO CHAPTER 8, PLUMBING CODE)
ALL FILL SHALL BE GRAVELLY COARSE SAND
CROWN FINISH GRADE FROM CENTER AT 3%
LOAM, SEED, MULCH DISTURBED AREAS

WILLIAM P BROWN *William P Brown*	188	4/21/2008
Site Evaluator Signature	SE #	Date