M 14 L 51

Department of Human Services
Division of Health Engineering
(207)289-3826

SUBSURFACE WASTEWATER DISPOSAL SYSTEM APPLICATION

PROPERTY ADDRESS

Town Or Plantation	Augusta
Street Division Lot #	Off Cony Road

PROPERTY OWNERS NAME

Last: Parker First: L. Dean

Applicant Name:	L. Dean Parker
Mailing Address of Owner/Applicant (If Different)	RFD#2 Box 887 Augusta, ME 04330

AUGUSTA 3461 TOWN COPY

Date Permit Issued: 6/5/96 $ 69.00 FEE ☐ If Double Fee Charged

Local Plumbing Inspector Signature L.P.I. # 8.50

Owner/Applicant Statement

I certify that the information submitted is correct to the best of my knowledge and understand that any falsification is reason for the Local Plumbing Inspector to deny a Permit.

Signature of Owner/Applicant — Date 6/21/96

Caution: Inspection Required

I have inspected the installation authorized above and found it to be in compliance with the Subsurface Wastewater Disposal Rules.

Local Plumbing Inspector Signature — Date Approved 9/4/96

PERMIT INFORMATION

THIS APPLICATION IS FOR:
1. ☑ NEW SYSTEM
2. ☐ REPLACEMENT SYSTEM
3. ☐ EXPANDED SYSTEM
4. ☐ EXPERIMENTAL SYSTEM

SEASONAL CONVERSION
to be completed by the LPI
5. ☐ SYSTEM COMPLIES WITH RULES
6. ☐ CONNECTED TO SANITARY SEWER
7. ☐ SYSTEM INSTALLED – P# _____
8. ☐ SYSTEM DESIGN RECORDED AND ATTACHED

IF REPLACEMENT SYSTEM:
YEAR FAILING SYSTEM INSTALLED _____
THE FAILING SYSTEM IS:
1. ☐ BED 3. ☐ TRENCH
2. ☐ CHAMBER 4. ☐ OTHER: _____

THIS APPLICATION REQUIRES:
1. ☑ NO RULE VARIANCE
2. ☐ NEW SYSTEM VARIANCE Attach New System Variance Form
3. ☐ REPLACEMENT SYSTEM VARIANCE Attach Replacement System Variance Form
a. ☐ Requiring Local Plumbing Inspector Approval
b. ☐ Requires State and Local Plumbing Inspector Approval
4. ☐ MINIMUM LOT SIZE VARIANCE

DISPOSAL SYSTEM TO SERVE:
1. ☑ SINGLE FAMILY DWELLING
2. ☐ MODULAR OR MOBILE HOME
3. ☐ MULTIPLE FAMILY DWELLING
4. ☐ OTHER _____ SPECIFY

INSTALLATION IS:
COMPLETE SYSTEM
1. ☑ NON-ENGINEERED SYSTEM
2. ☐ PRIMITIVE SYSTEM (Includes Alternative Toilet)
3. ☐ ENGINEERED (+2000 gpd)
INDIVIDUALLY INSTALLED COMPONENTS:
4. ☐ TREATMENT TANK (ONLY)
5. ☐ HOLDING TANK _____ GAL
6. ☐ ALTERNATIVE TOILET (ONLY)
7. ☐ NON-ENGINEERED DISPOSAL AREA (ONLY)
8. ☐ ENGINEERED DISPOSAL AREA (ONLY)
9. ☐ SEPARATED LAUNDRY SYSTEM

SIZE OF PROPERTY	ZONING
10.5 acres	

TYPE OF WATER SUPPLY
Proposed Drilled well

DESIGN DETAILS (SYSTEM LAYOUT SHOWN ON PAGE 3)

TREATMENT TANK
1. ☑ SEPTIC: ☑ Regular ☐ Low Profile
2. ☐ AEROBIC
SIZE: 1000 GALS.

WATER CONSERVATION
1. ☑ NONE
2. ☐ LOW VOLUME TOILET
3. ☐ SEPARATED LAUNDRY SYSTEM
4. ☐ ALTERNATIVE TOILET
SPECIFY: _____

PUMPING
1. ☐ NOT REQUIRED
2. ☑ MAY BE REQUIRED (DEPENDING ON TREATMENT TANK LOCATION AND ELEVATION)
3. ☐ REQUIRED
DOSE: _____ GALS.

CRITERIA USED FOR DESIGN FLOW (BEDROOMS, SEATING, EMPLOYEES, WATER RECORDS, ETC.)
3 bedroom single family dwelling

SOIL CONDITIONS USED FOR DESIGN PURPOSES

PROFILE	CONDITION
7	D

DEPTH TO LIMITING FACTOR: 12.

SIZE RATINGS USED FOR DESIGN PURPOSES
1. ☐ SMALL
2. ☐ MEDIUM
3. ☑ MEDIUM-LARGE
4. ☐ LARGE
5. ☐ EXTRA LARGE

DISPOSAL AREA TYPE/SIZE
1. ☐ BED _____ Sq. Ft.
2. ☑ CHAMBER 891 Sq. Ft. ☐ REGULAR ☐ H-20
3. ☐ TRENCH _____ Linear Ft.
4. ☐ OTHER: _____

DESIGN FLOW: 270 (GALLONS/DAY)

SITE EVALUATOR STATEMENT

On 9/23/95 (date) I conducted a site evaluation for this project and certify that the data reported is accurate. The system I propose is in accordance with the Subsurface Wastewater Disposal Rules.

Site Evaluator Signature — SE# 331 — Date 9/24/95

(Local Plumbing Inspector's Signature If permit is for Seasonal Conversion.)

SUBSURFACE WASTEWATER DISPOSAL SYSTEM APPLICATION

Department of Human Services
Division of Health Engineering

Town, City, Plantation	Street, Road, Subdivision	Owners Name
Augusta	Off Cony Rd	L. Dean Parker

SITE PLAN

Scale 1" = _____ Ft.

See attached plan

SITE LOCATION PLAN (Attach Map from Maine Atlas for New System Variance)

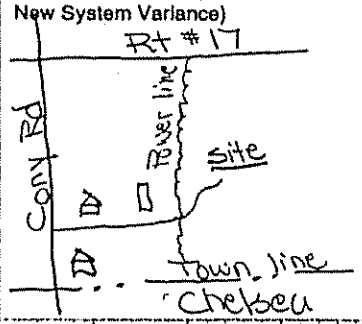

SOIL DESCRIPTION AND CLASSIFICATION (Location of Observation Holes Shown Above)

Observation Hole TP#2 ☑ Test Pit ☐ Boring

1½" Depth of Organic Horizon Above Mineral Soil

DEPTH BELOW MINERAL SOIL SURFACE (inches)

Texture	Consistency	Color	Mottling
Gravelly fine sandy loam	friable	10YR/4/4	none
		10YR/4/6	
		10YR/5/8	
		2.5Y/6/4	
silt loam	firm cemented	2.5Y/6/3	common distinct

Soil	Classification	Slope	Limiting Factor	
7 (Profile)	D (Condition)	9 %	12"	☑ Ground Water ☐ Restrictive Layer ☐ Bedrock

Observation Hole TP#1 ☑ Test Pit ☐ Boring

1½" Depth of Organic Horizon Above Mineral Soil

DEPTH BELOW MINERAL SOIL SURFACE (inches)

Texture	Consistency	Color	Mottling
Gravelly fine sandy loam		10YR/3/6	
		10YR/5/6	
		2.5Y/6/4	none
silt loam	firm cemented	2.5Y/5/4	Many Prominent

Soil	Classification	Slope	Limiting Factor	
7 (Profile)	C (Condition)	8 %	15"	☑ Ground Water ☐ Restrictive Layer ☐ Bedrock

Lane P. Coffin
Site Evaluator Signature

331
SE#

9/24/95
Date

SUBSURFACE WASTEWATER DISPOSAL SYSTEM APPLICATION

Department of Human Services
Division of Health Engineering

Town, City, Plantation	Street, Road, Subdivision	Owner's Name
Augusta	Off Cony Road	L. Dean Parker

SUBSURFACE WASTEWATER DISPOSAL & SITE PLAN

Scale: 1" = 40 feet

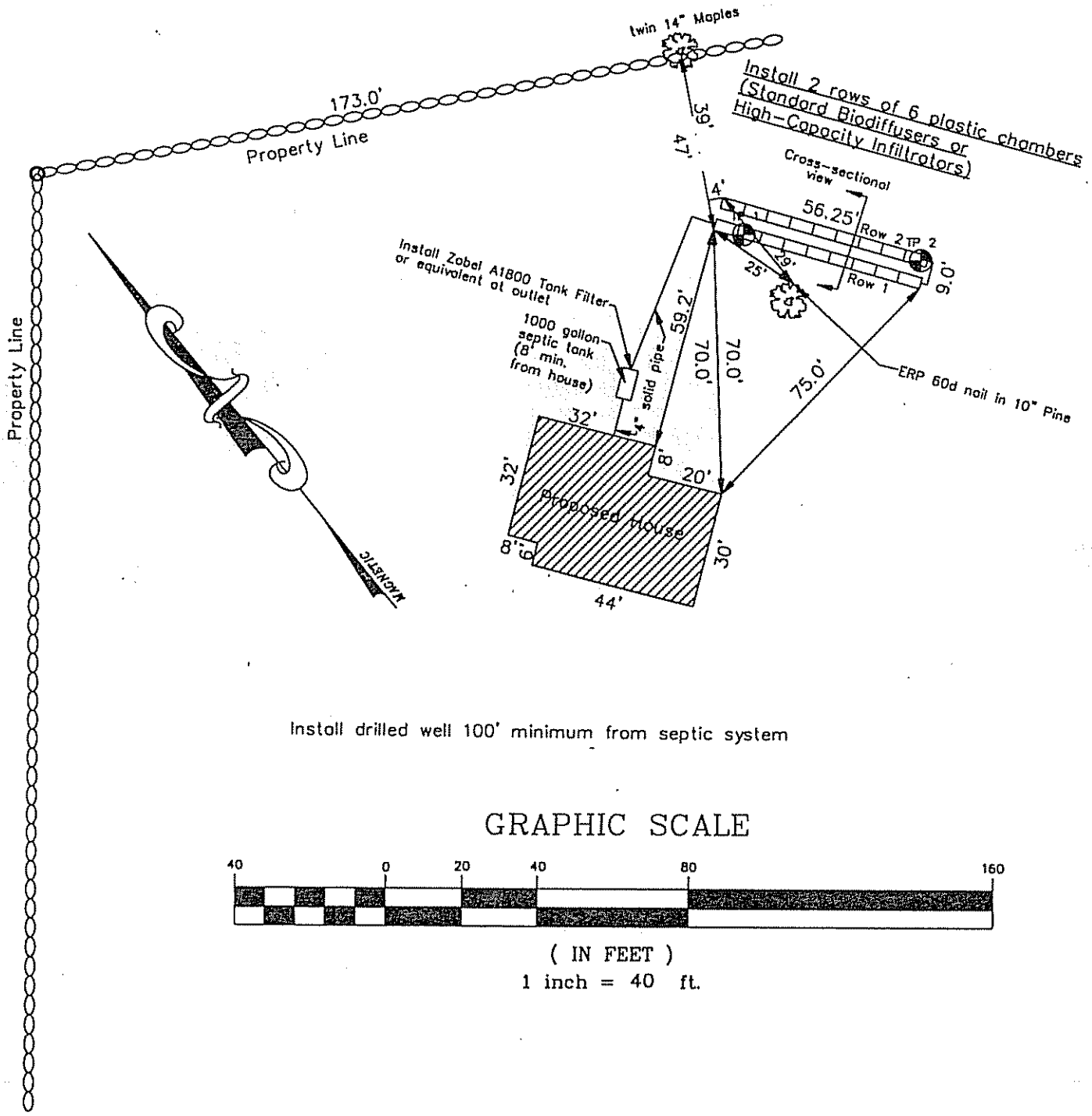

Install drilled well 100' minimum from septic system

GRAPHIC SCALE

(IN FEET)
1 inch = 40 ft.

Site Evaluator's Signature Kane P. Coffin SE # 331 Date: 9/24/95/95 HHE-200

SUBSURFACE WASTEWATER DISPOSAL SYSTEM APPLICATION

Department of Human Services
Division of Health Engineering

Town, City, Plantation	Street, Road, Subdivision	Owner's Name
Augusta	Off Cony Road	L. Dean Parker

FILL REQUIREMENTS			CONSTRUCTION ELEVATIONS		
	Depth of Fill (Upslope)	31–33"		Reference Elevation is	00"
	Depth of Fill (Downslope)	45–45"		Bottom of Disposal Area	n/a
				Top of Chambers	n/a

ELEV. REF. PT:
50d nail in 10" Pine
21" above ground (North side)

DISPOSAL AREA CROSS SECTION

SCALE:
Vertical: 1 inch = 5 feet
Horizontal: 1 inch = 5 feet

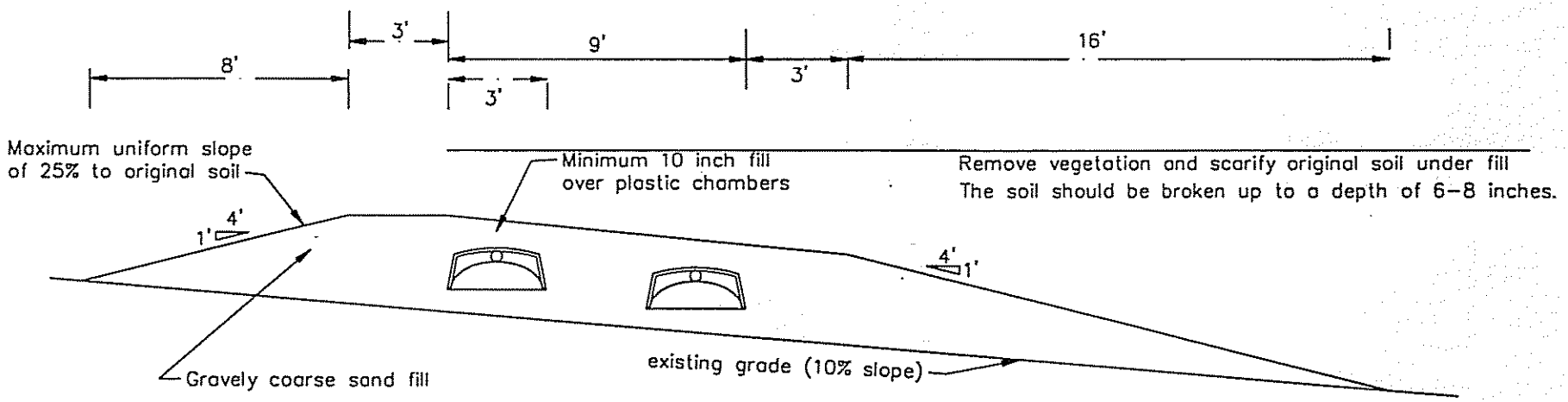

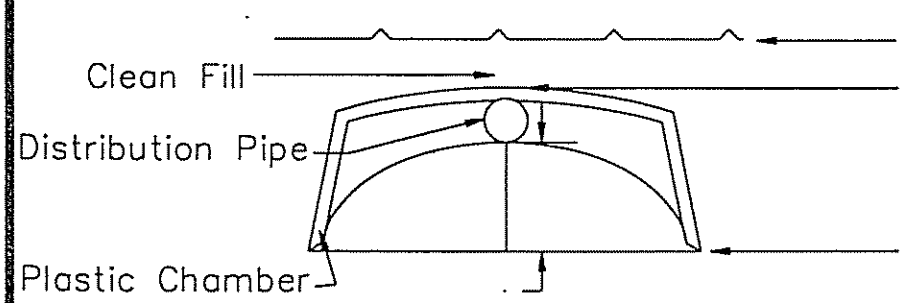

Elevations for:

Row #1	Row #2
–13"	–20"
–23"	–30"
–38"	–45"

DETAIL (no scale)

Site Evaluator's Signature Kane P. Coffin SE # 331 Date: 9/24/95

HHE–200