SUBSURFACE WASTEWATER DISPOSAL SYSTEM APPLICATION

Department of Human Services
Division of Health Engineering
(207) 289-3826 87-Z

M14L36

AUGUSTA PERMIT # 1,080 TOWN COPY

Date Permit Issued: 6 30 87 $ 40.00 FEE ☐ If Double Fee Charged

Gary R. Fuller
Local Plumbing Inspector Signature

L.P.I. # 850

PROPERTY ADDRESS

Town Or Plantation	Augusta
Street Subdivision Lot #	Pleasant Hill Road

PROPERTY OWNERS NAME

Last: Lambert First: Pauline & Clement

Applicant Name:	Don Lambert
Mailing Address of Owner/Applicant (If Different)	472 South Belfast Ave. Augusta Maine 04330

Owner/Applicant Statement

I certify that the information submitted is correct to the best of my knowledge and understand that any falsification is reason for the Local Plumbing Inspector to deny a Permit.

Donald Lambert 6/16/87
Signature of Owner/Applicant Date

Caution: Inspection Required

I have inspected the installation authorized above and found it to be in compliance with the Subsurface Wastewater Disposal Rules.

Gary R. Fuller 8/12/87
Local Plumbing Inspector Signature Date Approved

PERMIT INFORMATION

THIS APPLICATION IS FOR:

1. ☒ NEW SYSTEM
2. ☐ REPLACEMENT SYSTEM
3. ☐ EXPANDED SYSTEM
4. ☐ SEASONAL CONVERSION
5. ☐ EXPERIMENTAL SYSTEM

THIS APPLICATION REQUIRES:

1. ☒ NO RULE VARIANCE REQUIRED
2. ☐ NEW SYSTEM VARIANCE Attach New System Variance Form
   ☐ REPLACEMENT SYSTEM VARIANCE Attach Replacement System Variance Form
3. ☐ Requiring Local Plumbing Inspector Approval
4. ☐ Requires State and Local Plumbing Inspector Approval

INSTALLATION IS:

COMPLETE SYSTEM

1. ☒ NON-ENGINEERED SYSTEM
2. ☐ PRIMITIVE SYSTEM (Includes Alternative Toilet)
3. ☐ ENGINEERED (+2000 gpd)

INDIVIDUALLY INSTALLED COMPONENTS:

4. ☐ TREATMENT TANK (ONLY)
5. ☐ HOLDING TANK
6. ☐ ALTERNATIVE TOILET (ONLY)
7. ☐ NON-ENGINEERED DISPOSAL AREA (ONLY)
8. ☐ ENGINEERED DISPOSAL AREA (ONLY)
9. ☐ SEPARATED LAUNDRY SYSTEM

IF REPLACEMENT SYSTEM:

YEAR FAILING SYSTEM INSTALLED N.A.

THE FAILING SYSTEM IS:

1. ☐ BED 3. ☐ TRENCH
2. ☐ CHAMBER 4. ☐ OTHER: _____

DISPOSAL SYSTEM TO SERVE:

1. ☒ SINGLE FAMILY DWELLING
2. ☐ MODULAR OR MOBILE HOME
3. ☐ MULTIPLE FAMILY DWELLING
4. ☐ OTHER _____ SPECIFY

SIZE OF PROPERTY	ZONING
7 Ac. ±	Rural

TYPE OF WATER SUPPLY

Well to be drilled

DESIGN DETAILS (SYSTEM LAYOUT SHOWN ON PAGE 3)

TREATMENT TANK

1. ☒ SEPTIC: ☒ Regular ☐ Low Profile
2. ☐ AEROBIC

SIZE: 1000 GALS.

WATER CONSERVATION

1. ☐ NONE
2. ☒ LOW VOLUME TOILET
3. ☐ SEPARATED LAUNDRY SYSTEM
4. ☐ ALTERNATIVE TOILET

SPECIFY: _____

PUMPING

1. ☒ NOT REQUIRED
2. ☐ MAY BE REQUIRED (DEPENDING ON TREATMENT TANK LOCATION AND ELEVATION)
3. ☐ REQUIRED

DOSE: _____ GALS.

CRITERIA USED FOR DESIGN FLOW (BEDROOMS, SEATING, EMPLOYEES, WATER RECORDS, ETC.)

3 Bedrooms

RECEIVED JUN 17 1987

DESIGN FLOW: 270 - 10% (GALLONS/DAY)

SOIL CONDITIONS USED FOR DESIGN PURPOSES

PROFILE	CONDITION
2	C

DEPTH TO LIMITING FACTOR: 23

SIZE RATINGS USED FOR DESIGN PURPOSES

1. ☐ SMALL
2. ☐ MEDIUM
3. ☒ MEDIUM-LARGE
4. ☐ LARGE
5. ☐ EXTRA LARGE

DISPOSAL AREA TYPE/SIZE

1. ☒ BED 840 Sq. Ft.
2. ☐ CHAMBER _____ Sq. Ft.
   ☐ REGULAR ☐ H-20
3. ☐ TRENCH _____ Linear Ft.
4. ☐ OTHER: _____

SITE EVALUATOR STATEMENT

(☐ SITE EVALUATION WAIVED BY LOCAL OPTION)

On June 7, 1987 (date) I ~~conducted~~ completed a site evaluation for this project and certify that the data reported is accurate. The system I propose is in accordance with the Subsurface Wastewater Disposal Rules.

J. Wierendang Cr
Site Evaluator Signature

SE#35
SE#

6/16/87
Date

* Local Plumbing Inspectors Signature if a Local Site Evaluation Waiver under a Local Option

SUBSURFACE WASTEWATER DISPOSAL SYSTEM APPLICATION

Department of Human Services
Division of Health Engineering 87-2

Town, City, Plantation: AUGUSTA

Street, Road, Subdivision: Pleasant Hill Rd.

Owners Name: Lambert, Pauline + Clement

SITE PLAN

Scale 1" = 100 Ft.

SITE LOCATION PLAN (Attach Map from Maine Atlas for New System Variance)

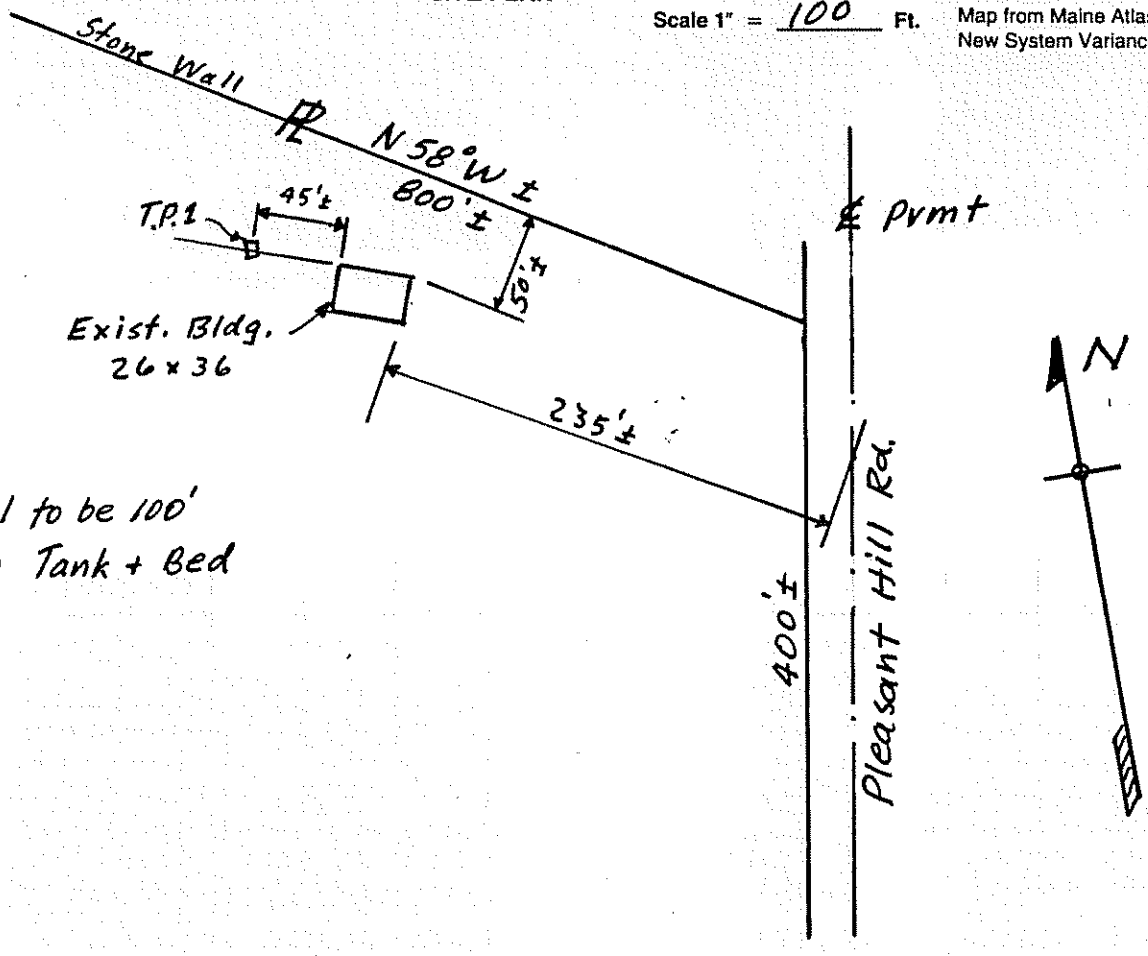

NOTE
Well to be 100'
from Tank + Bed

SOIL DESCRIPTION AND CLASSIFICATION (Location of Observation Holes Shown Above)

Observation Hole TP1 ☒ Test Pit ☒ Boring

0± " Depth of Organic Horizon Above Mineral Soil

DEPTH BELOW MINERAL SOIL SURFACE (Inches)

Depth	Texture	Consistency	Color	Mottling
0	F. S. L.	Friable	Brown	
6	Fine Sandy Loam	Friable	Brown (Light)	
20	Fine sandy Loam	Friable	Olive Brown	
	Sandy Loam	Firm	olive gray	↑ Mottles
40	sandy Loam	Firm	gray	Layer T.P.
50				

Soil	Classification	Slope	Limiting Factor	
2 (Profile)	C (Condition)	12± %	23"	☒ Ground Water ☐ Restrictive Layer ☐ Bedrock

Observation Hole _____ ☐ Test Pit ☐ Boring

_____ " Depth of Organic Horizon Above Mineral Soil

DEPTH BELOW MINERAL SOIL SURFACE (Inches)

Depth	Texture	Consistency	Color	Mottling
0				
6				
10				
15				
20				
30				
40				
50				

Soil	Classification	Slope	Limiting Factor	
(Profile)	(Condition)	%	"	☐ Ground Water ☐ Restrictive Layer ☐ Bedrock

J. Wierendang Er
Site Evaluator Signature

SE #35
SE#

6/16/87
Date

HHE-200 Rev.1/84

SUBSURFACE WASTEWATER DISPOSAL SYSTEM APPLICATION

Department of Human Services
Division of Health Engineering 87-Z

Town, City, Plantation	Street, Road, Subdivision	Owners Name
AUGUSTA	Pleasant Hill Rd.	Lambert, Pauline + Clement

SUBSURFACE WASTEWATER DISPOSAL PLAN

Scale 1" = 20 Ft.

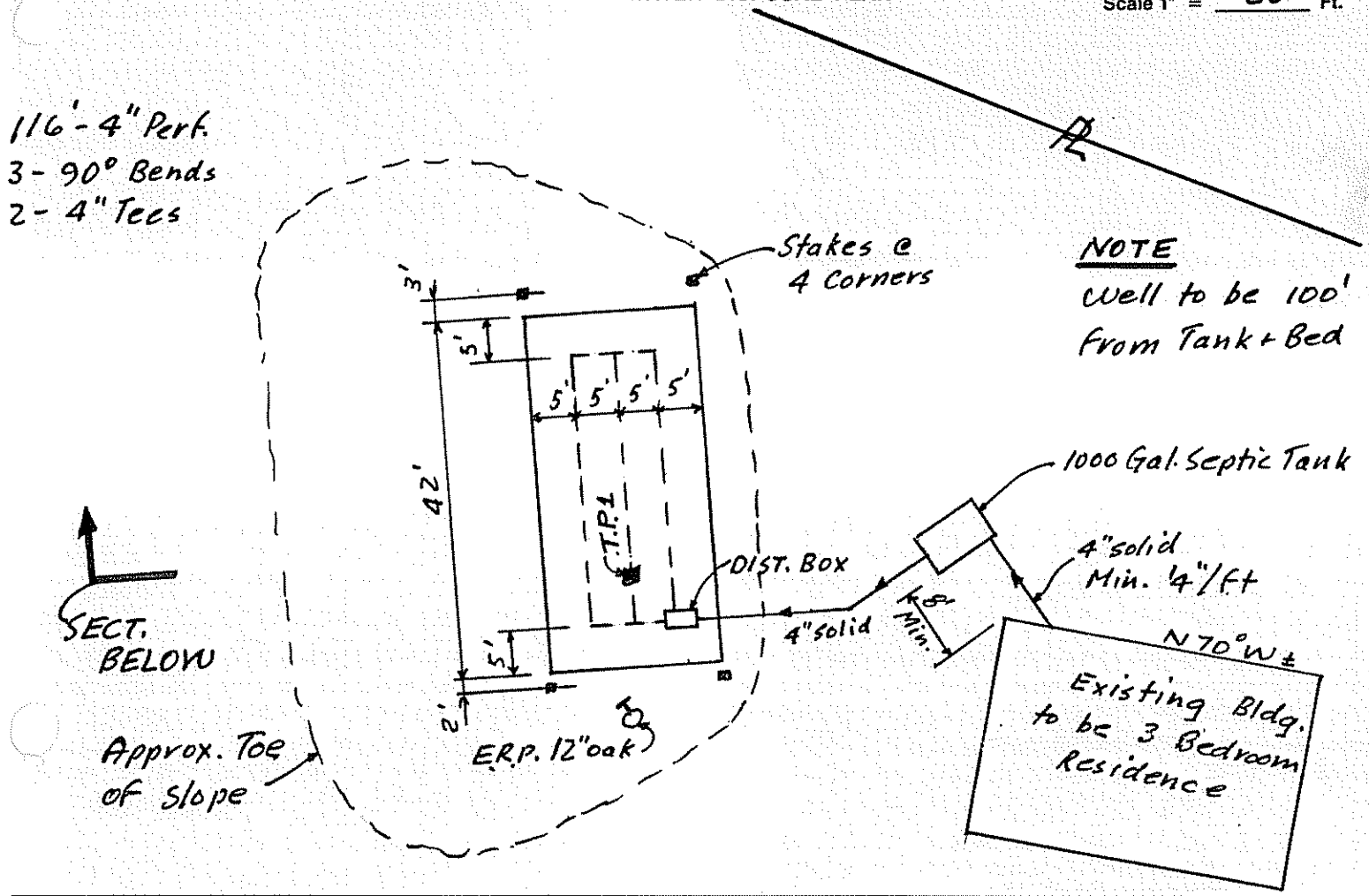

FILL REQUIREMENTS		CONSTRUCTION ELEVATIONS		ELEVATION REFERENCE POINT LOCATION & DESCRIPTION
Depth of Fill (Upslope)	14"	Reference Elevation is	+10'-0"	P.K. nail in 12" Oak
Depth of Fill (Downslope)	42 ±"	Bottom of Disposal Area	+5'-0"	
		Top of Distribution Lines or Chambers	+5'-11"	

DISPOSAL AREA CROSS SECTION

Scale:
Vertical: 1 inch = 5 Ft.
Horizontal: 1 inch = 10 Ft.

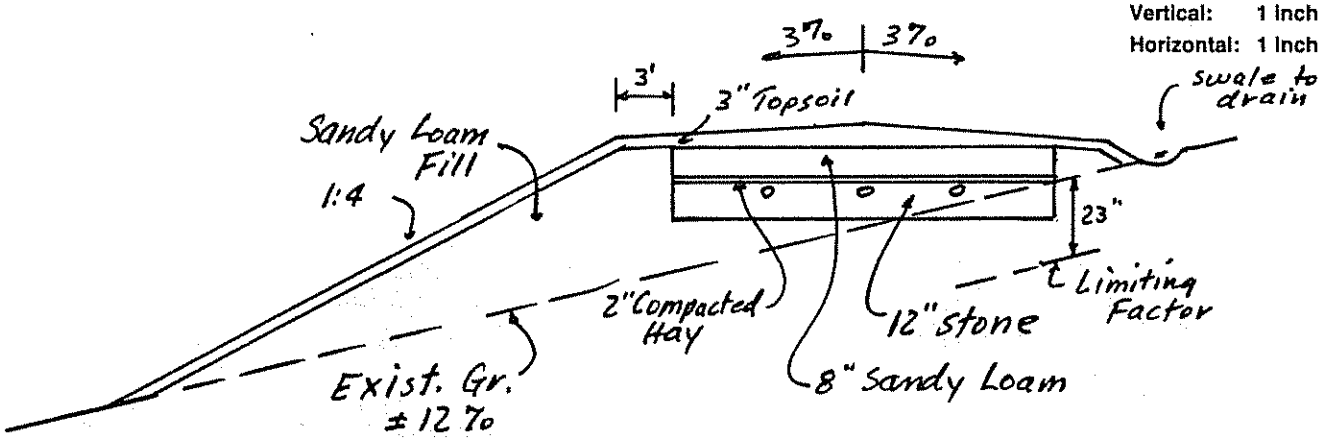

Clear & Grub, Till or Harrow, Seed & Mulch

J. Wiesendanger — Site Evaluator Signature
SE# 35 — SE#
6/16/87 — Date