SUBSURFACE WASTEWATER DISPOSAL SYSTEM APPLICATION

Department of Human Services
Division of Health Engineering
(207)289-3626

PROPERTY ADDRESS

Town Or Plantation	AUGUSTA
Street Subdivision Lot #	CONY ROAD

PROPERTY OWNERS NAME

Last: FORTIN First: TIM

Applicant Name:	
Mailing Address of Owner/Applicant (If Different)	RIVERSIDE MOBILE HOME PARK LOT #136 AUGUSTA, ME 04330

Caution: Permit Required

AUGUSTA Subsurface Wastewater Disposal 1858 TOWN COPY

Installed with a Permit Issued by the Local Plumbing Inspector

Date Permit Issued: 5 9 90 $ 40 00 FEE ☐ If Double Fee Charged

Gary R. Tullo — Local Plumbing Inspector Signature — L.P.I. # 1050

Owner/Applicant Statement

I certify that the information submitted is correct to the best of my knowledge and understand that any falsification is reason for the Local Plumbing Inspector to deny a Permit.

Christine Fortin 5.1.90
Signature of Owner/Applicant — Date

Caution: Inspection Required

I have inspected the installation authorized above and found it to be in compliance with the Subsurface Wastewater Disposal Rules.

Gary R. Tullo — Local Plumbing Inspector Signature — 5-31-90 Date Approved

PERMIT INFORMATION

THIS APPLICATION IS FOR:
1. ☒ NEW SYSTEM
2. ☐ REPLACEMENT SYSTEM
3. ☐ EXPANDED SYSTEM
4. ☐ EXPERIMENTAL SYSTEM

SEASONAL CONVERSION
to be completed by the LPI
5. ☐ SYSTEM COMPLIES WITH RULES
6. ☐ CONNECTED TO SANITARY SEWER
7. ☐ SYSTEM INSTALLED – P# _____
8. ☐ SYSTEM DESIGN RECORDED AND ATTACHED

IF REPLACEMENT SYSTEM:
YEAR FAILING SYSTEM INSTALLED _____
THE FAILING SYSTEM IS:
1. ☐ BED 3. ☐ TRENCH
2. ☐ CHAMBER 4. ☐ OTHER _____

THIS APPLICATION REQUIRES:
1. ☒ NO RULE VARIANCE
2. ☐ NEW SYSTEM VARIANCE Attach New System Variance Form
3. ☐ REPLACEMENT SYSTEM VARIANCE Attach Replacement System Variance Form
5. ☐ Requiring Local Plumbing Inspector Approval
6. ☐ Requires State and Local Plumbing Inspector Approval
4. ☐ MINIMUM LOT SIZE VARIANCE

DISPOSAL SYSTEM TO SERVE:
1. ☒ SINGLE FAMILY DWELLING
2. ☐ MODULAR OR MOBILE HOME
3. ☐ MULTIPLE FAMILY DWELLING
4. ☐ OTHER _____ SPECIFY

INSTALLATION IS:
COMPLETE SYSTEM
1. ☒ NON-ENGINEERED SYSTEM
2. ☐ PRIMITIVE SYSTEM (Includes Alternative Toilet)
3. ☐ ENGINEERED (+2000 gpd)

INDIVIDUALLY INSTALLED COMPONENTS:
4. ☐ TREATMENT TANK (ONLY)
5. ☐ HOLDING TANK _____ GAL
6. ☐ ALTERNATIVE TOILET (ONLY)
7. ☐ NON-ENGINEERED DISPOSAL AREA (ONLY)
8. ☐ ENGINEERED DISPOSAL AREA (ONLY)
9. ☐ SEPARATED LAUNDRY SYSTEM

SIZE OF PROPERTY	ZONING
1 ACRE	

TYPE OF WATER SUPPLY
WELL TO BE LOCATED AT LEAST 100' FROM SYSTEM

DESIGN DETAILS (SYSTEM LAYOUT SHOWN ON PAGE 3)

TREATMENT TANK
1. ☒ SEPTIC: ☒ Regular ☐ Low Profile
2. ☐ AEROBIC

SIZE: 1000 GALS.

WATER CONSERVATION
1. ☒ NONE
2. ☐ LOW VOLUME TOILET
3. ☐ SEPARATED LAUNDRY SYSTEM
4. ☐ ALTERNATIVE TOILET

SPECIFY: _____

PUMPING
1. ☐ NOT REQUIRED
2. ☒ MAY BE REQUIRED (DEPENDING ON TREATMENT TANK LOCATION AND ELEVATION)
3. ☐ REQUIRED

DOSE: _____ GALS.

CRITERIA USED FOR DESIGN FLOW (BEDROOMS, SEATING, EMPLOYEES, WATER RECORDS, ETC.)
3 BEDROOM RESIDENTIAL

SOIL CONDITIONS USED FOR DESIGN PURPOSES

PROFILE	CONDITION
3	C

DEPTH TO LIMITING FACTOR: 20

SIZE RATINGS USED FOR DESIGN PURPOSES
1. ☐ SMALL
2. ☐ MEDIUM
3. ☐ MEDIUM-LARGE
4. ☐ LARGE
5. ☐ EXTRA-LARGE

DISPOSAL AREA TYPE/SIZE
1. ☒ BED 900 Sq. Ft.
2. ☐ CHAMBER _____ Sq. Ft. ☐ REGULAR ☐ H-20
3. ☐ TRENCH _____ Linear Ft.
4. ☐ OTHER: _____

DESIGN FLOW: 270 (GALLONS/DAY)

RECEIVED MAY 1 1990

SITE EVALUATOR STATEMENT

On 7/14/88 (date) I conducted a site evaluation for this project and certify that the data reported is accurate. The system I propose is in accordance with the Subsurface Wastewater Disposal Rules.

Site Evaluator Signature — SE# 132 — Date 7/25/88

(Local Plumbing Inspector's Signature if permit is for Seasonal Conversion.)

SUBSURFACE WASTEWATER DISPOSAL SYSTEM APPLICATION

Department of Human Services
Division of Health Engineering

Town, City, Plantation: AUGUSTA

Street, Road, Subdivision: CONY ROAD

Owners Name: FORTIN, TIM

SITE PLAN

Scale 1" = 50 Ft.

SITE LOCATION PLAN (Attach Map from Maine Atlas for New System Variance)

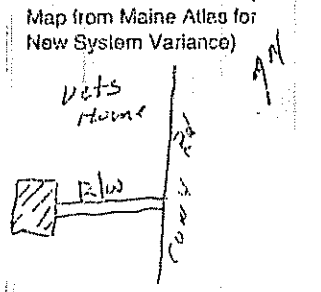

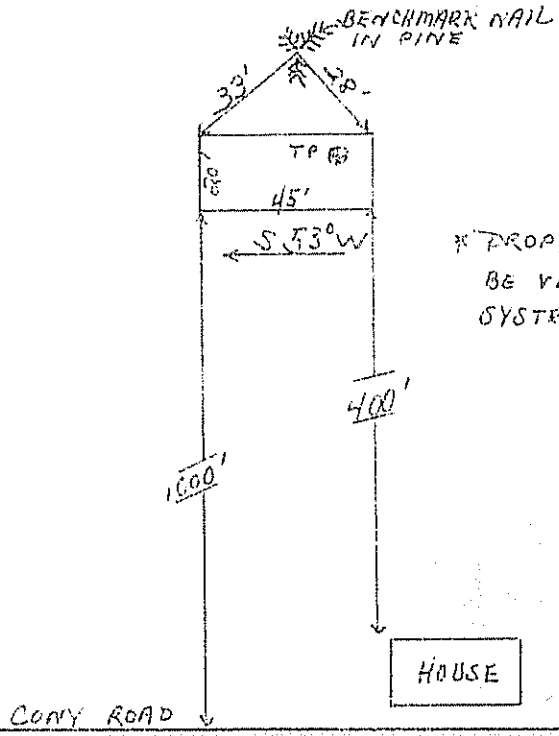

* PROPERTY LINES SHALL BE VERIFIED BEFORE SYSTEM IS INSTALLED

1. Property lines as indicated by owner, or owners agent.
2. System shall be installed in accordance with the Me. St. Plumbing Code.
3. Scarify original ground before placing fill.
4. Fill shall be clean sandy loam placed in 8" compacted lifts.
5. Bed shall be at least 20' from house. Tank shall be at least 8' from house.
6. Well shall be at least 100' from tank and bed.
7. Site shall be graded in a manner which will divert surface water from the bed.
8. This site evaluation & design has been done in compliance with the Me. St. Plumbing Code. The approval and/or design may be subject to more restrictive local ordinances. The local Plumbing Inspector should be contacted for final review and approval.

SOIL DESCRIPTION AND CLASSIFICATION (Location of Observation Holes Shown Above)

Observation Hole 1 ☒ Test Pit ☐ Boring

1 " Depth of Organic Horizon Above Mineral Soil

DEPTH BELOW MINERAL SOIL SURFACE (Inches)

Texture	Consistency	Color	Mottling
FINE	FRIABLE	BROWN	
SANDY			
LOAM		REDDISH	
		BROWN	
		YELLOW	
LOAM		BROWN	EVIDENT
	PAN		

Soil	Classification	Slope	Limiting Factor	
3 (Profile)	C (Condition)	7½ %	20	☒ Ground Water ☐ Restrictive Layer ☐ Bedrock

Observation Hole _____ ☐ Test Pit ☐ Boring

_____ " Depth of Organic Horizon Above Mineral Soil

DEPTH BELOW MINERAL SOIL SURFACE (Inches)

Texture	Consistency	Color	Mottling

Soil	Classification	Slope	Limiting Factor	
(Profile)	(Condition)	%		☐ Ground Water ☐ Restrictive Layer ☐ Bedrock

Site Evaluator Signature: [signature]

SE#: 132

Date: 3/25/88

SUBSURFACE WASTEWATER DISPOSAL SYSTEM APPLICATION

Department of Human Services
Division of Health Engineering

Town, City, Plantation	Street, Road, Subdivision	Owners Name
AUGUSTA	CONY ROAD	FORTIN, TIM

SUBSURFACE WASTEWATER DISPOSAL PLAN

Scale 1" = 20 Ft.

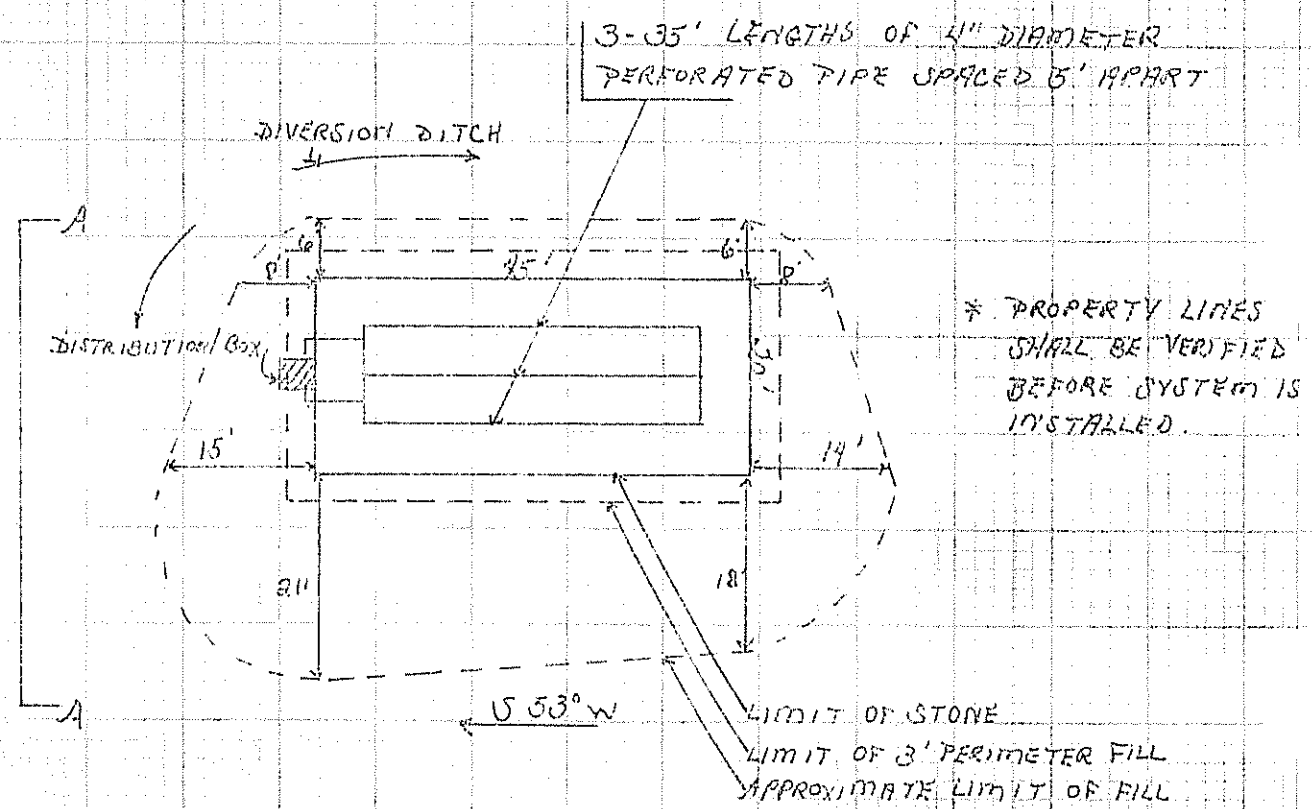

* PROPERTY LINES SHALL BE VERIFIED BEFORE SYSTEM IS INSTALLED.

FILL REQUIREMENTS		CONSTRUCTION ELEVATIONS		ELEVATION REFERENCE POINT LOCATION & DESCRIPTION
Depth of Fill (Upslope)	16"	Reference Elevation is	0'00"	BENCHMARK NAIL IN PINE TREE
Depth of Fill (Downslope)	34"	Bottom of Disposal Area	-50"	
		Top of Distribution Lines or Chambers	-39"	

DISPOSAL AREA CROSS SECTION

Scale:
Vertical: 1 inch = 5 Ft.
Horizontal: 1 inch = 20 Ft.

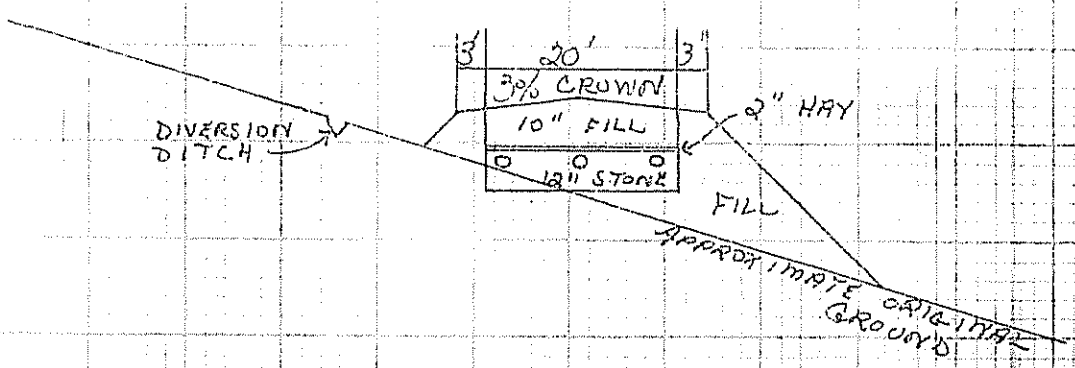

SECTION A-A

Site Evaluator Signature	DE#	Date
[signature]	132	7/25/88