SUBSURFACE WASTEWATER DISPOSAL SYSTEM APPLICATION

Maine Dept.Health & Human Services
Div of Environmental Health , 11 SHS
(207) 287-5672 Fax: (207) 287-4172

PROPERTY LOCATION

City, Town, or Plantation	AUGUSTA
Street or Road	61 MORRISETTE LANE
Subdivision, Lot #	M12 L5 IE

>> CAUTION: LPI APPROVAL REQUIRED <<

AUGUSTA PERMIT #6968 TOWN COPY
Date Permit Issued: 7/30/14 $ 250.00 fee
15.00
LPI # 850

OWNER/APPLICANT INFORMATION

Name (last, first, MI)	MORRISSETTE, MICHAEL ☒ Owner ☐ Applicant
Mailing Address of Owner/Applicant	61 MORRISSETTE LANE AUGUSTA, 04330
Daytime Tel. #	441-4871

OWNER OR APPLICANT STATEMENT
I state and acknowledge that the information submitted is correct to the best of my knowledge and understand that any falsification is reason for the Department and/or Local Plumbing Inspector to deny a Permit.

Signature of Owner or Applicant — Date

CAUTION: INSPECTION REQUIRED
I have inspected the installation authorized above and found it to be in compliance with the Subsurface Wastewater Disposal Rules Application.

Local Plumbing Inspector Signature — (1st) date approved 9/10/14 — (2nd) date approved

PERMIT INFORMATION

TYPE OF APPLICATION
- ☒ 1. First Time System
- ☐ 2. Replacement System
  - Type replaced: ____
  - Year installed: ____
- ☐ 3. Expanded System
  - ☐ a. <25% Expansion
  - ☐ b. ≥25% Expansion
- ☐ 4. Experimental System
- ☐ 5. Seasonal Conversion

THIS APPLICATION REQUIRES
- ☒ 1. No Rule Variance
- ☐ 2. First Time System Variance
  - ☐ a. Local Plumbing Inspector Approval
  - ☐ b. State & Local Plumbing Inspector Approval
- ☐ 3. Replacement System Variance
  - ☐ a. Local Plumbing Inspector Approval
  - ☐ b. State & Local Plumbing Inspector Approval
- ☐ 4. Minimum Lot Size Variance
- ☐ 5. Seasonal Conversion Permit

DISPOSAL SYSTEM COMPONENTS
- ☒ 1. Complete Non-engineered System
- ☐ 2. Primitive System (graywater & alt. toilet)
- ☐ 3. Alternative Toilet, specify: ____
- ☐ 4. Non-engineered Treatment Tank (only)
- ☐ 5. Holding Tank, ____ gallons
- ☐ 6. Non-engineered Disposal Field (only)
- ☐ 7. Separated Laundry System
- ☐ 8. Complete Engineered System (2000 gpd or more)
- ☐ 9. Engineered Treatment Tank (only)
- ☐ 10. Engineered Disposal Field (only)
- ☐ 11. Pre-treatment, specify: ____
- ☐ 12. Miscellaneous Components

SIZE OF PROPERTY
20± ☐ SQ. FT. ☒ ACRES

SHORELAND ZONING
☐ Yes ☒ No

DISPOSAL SYSTEM TO SERVE
- ☒ 1. Single Family Dwelling Unit, No. of Bedrooms: 3
- ☐ 2. Multiple Family Dwelling, No. of Units: ____
- ☐ 3. Other: ____ (specify)

Current Use ☐ Seasonal ☐ Year Round ☒ Undeveloped

TYPE OF WATER SUPPLY
☒ 1. Drilled Well ☐ 2. Dug Well ☐ 3. Private ☐ 4. Public ☐ 5. Other

DESIGN DETAILS (SYSTEM LAYOUT SHOWN ON PAGE 3)

TREATMENT TANK
- ☒ 1. Concrete
  - ☒ a. Regular
  - ☐ b. Low Profile
- ☐ 2. Plastic
- ☐ 3. Other: ____

CAPACITY: 1000 GAL.

DISPOSAL FIELD TYPE & SIZE
- ☒ 1. Stone Bed ☐ 2. Stone Trench
- ☐ 3. Proprietary Device
  - ☐ a. cluster array ☐ c. Linear
  - ☐ b. regular load ☐ d. H-20 load
- ☐ 4. Other: ____

SIZE: 900 ☒ sq. ft. ☐ lin. ft.

GARBAGE DISPOSAL UNIT
☒ 1. No ☐ 2. Yes ☐ 3. Maybe
If Yes or Maybe, specify one below:
- ☐ a. multi-compartment tank
- ☐ b. ____ tanks in series
- ☐ c. Increase in tank capacity
- ☐ d. Filter on Tank Outlet

DESIGN FLOW
270 gallons per day
BASED ON:
- ☒ 1. Table 4A (dwelling unit(s))
- ☐ 2. Table 4C(other facilities)
  SHOW CALCULATIONS for other facilites
- ☐ 3. Section 4G (meter readings)
  ATTACH WATER METER DATA

SOIL DATA & DESIGN CLASS
PROFILE CONDITION
3 C
at Observation Hole # 1
Depth 16 "
of Most Limiting Soil Factor

DISPOSAL FIELD SIZING
- ☐ 1. Medium---2.6 sq. ft. / gpd
- ☒ 2. Medium---Large 3.3 sq. f.t / gpd
- ☐ 3. Large---4.1 sq. ft. / gpd
- ☐ 4. Extra Large---5.0 sq. ft. / gpd

EFFLUENT/EJECTOR PUMP
- ☒ Not Required
- ☐ May Be Required
- ☐ Required

Specify only for engineered systems:
DOSE: ____ gallons

LATITUDE AND LONGITUDE
at center of disposal area
Lat. 44 d 17 m 29 s
Lon. 69 d 47 m 31 s
if g.p.s, state margin of error: ±20'

SITE EVALUATOR STATEMENT

I certify that on 7/10/2014 (date) I completed a site evaluation on this property and state that the data reported are accurate and that the proposed system is in compliance with the State of Maine Subsurface Wastewater Disposal Rules (10-144A CMR 241).

Site Evaluator Signature	SE # 194	Date 7/15/2014
J. JOHN BROCHU Site Evaluator Name Printed	968-3434, 841-0525 Telephone Number	johnb@fairpoint.net E-mail Address

Note : Changes to or deviations from the design should be confirmed with the Site Evaluator.

Jul 22 14 05:25a J. John Brochu 207-968-3434 p.1

SUBSURFACE WASTEWATER DISPOSAL SYSTEM APPLICATION

Department of Human Services
Division of Health Engineering
(207) 287-5672 Fax: (207) 287-3165

Town, City, Plantation	Street, Road, Subdivision	Owner's Name
AUGUSTA	61 MORRISSETTE LANE	MICHAEL MORRISETTE

SUBSURFACE WASTEWATER DISPOSAL PLAN — SCALE: 1" = 20 FT.

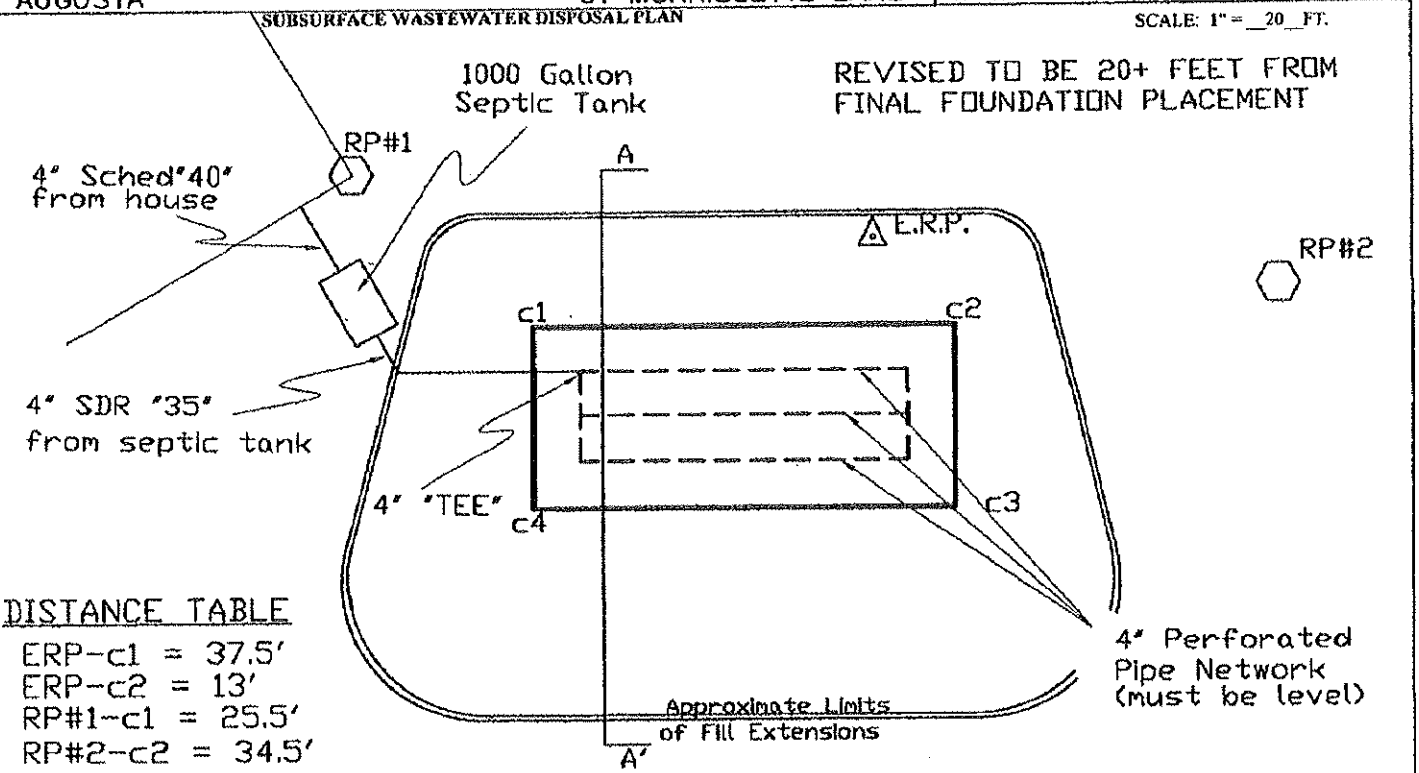

DISTANCE TABLE

ERP-c1 = 37.5'
ERP-c2 = 13'
RP#1-c1 = 25.5'
RP#2-c2 = 34.5'

20' x 45' STONE BED

FILL REQUIREMENTS		CONSTRUCTION ELEVATIONS		ELEVATION REFERENCE POINT
Depth of Fill (Upslope)	20"	Finished Grade Elevation	-41"	Location & Description: Flagged Nail 49" above ground on 1" Birch Tree
		Top of Distribution Pipe or Proprietary Device	-54"	
Depth of Fill (Downslope)	32"	Bottom of Disposal Area	-65"	Reference Elevation: 0.0"

DISPOSAL AREA CROSS SECTION

*Scarify surface before placing fill
*Fill To be Gravelly sand
*Loam & seed to prevent erosion
*Slope Surface @ 3%

Scale
Horizontal 1" = 10 ft.
Vertical 1" = 5 ft.

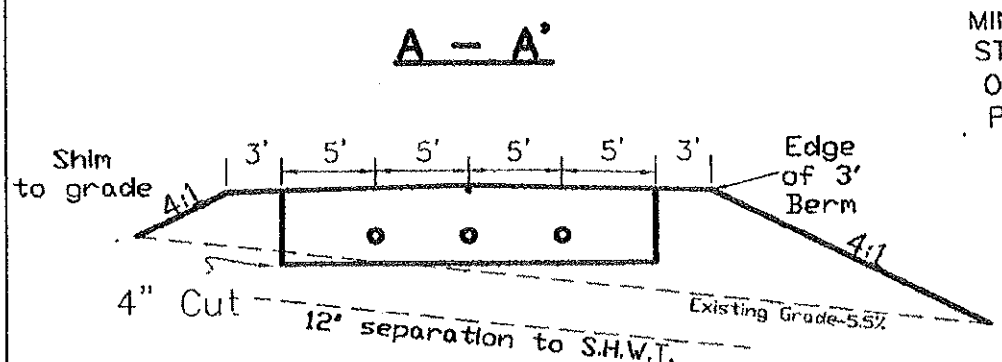

DETAIL—NO SCALE

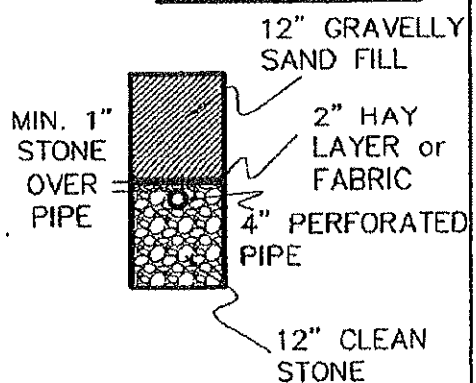

Site Evaluator Signature	SE #	Date		
J. John Brochu	194	7/10/2014	REVISED 8/20/2014	Page 3 of 3 HHE-200 Rev. 8/01

SUBSURFACE WASTEWATER DISPOSAL SYSTEM APPLICATION

Maine Department of Human Services
Division of Health Engineering, Station 10
(207) 287-5672 FAX (207) 287-4172

Town, City, Plantation	Street, Road, Subdivision	Owner or Applicant Name
AUGUSTA	61 MORRISSETTE LANE	MICHAEL MORRISSETTE

SITE PLAN Scale: 1" = 50 ft.

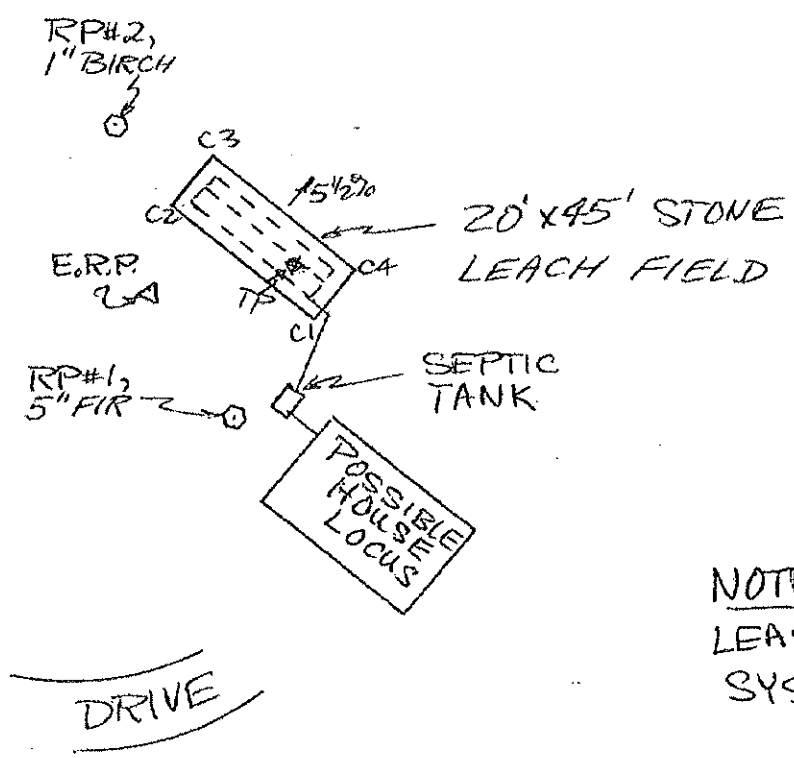

NOTE: WELL TO BE AT LEAST 100 FEET FROM SEPTIC SYSTEM.

SITE LOCATION MAP
(Attach map from Maine Atlas for First Time System Variance)

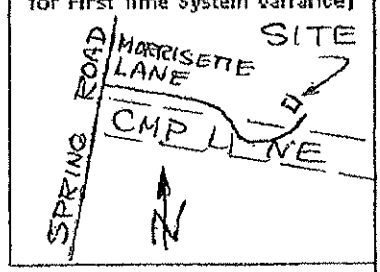

SOIL PROFILE DESCRIPTION AND CLASSIFICATION (Location of Observation Holes Shown Above)

Observation Hole # 1 ☒ Test Pit ☐ Boring

2½" Depth of organic horizon above mineral soil

Depth below mineral soil surface (inches)	Texture	Consistency	Color	Mottling
0–6	GRAVELLY SANDY LOAM	FRIABLE	ORANGE BROWN	NONE
6–12			YELLOW BROWN	
12–18	SILTY SANDY LOAM		OLIVE	COMMON
18–24			BROWN	
24–30	SILT	FIRM		DISTINCT
30–36	LOAM			
36–42				
42–48				

Soil Profile	Classification Condition	Slope Percent	Limiting Factor Depth	
3	C	5½	16"	☒ Groundwater ☐ Restrictive Layer ☐ Bedrock

Observation Hole # _____ ☐ Test Pit ☐ Boring

_____" Depth of organic horizon above mineral soil

Depth below mineral soil surface (inches)	Texture	Consistency	Color	Mottling
0–6				
6–12				
12–18				
18–24				
24–30				
30–36				
36–42				
42–48				

Soil Profile	Classification Condition	Slope Percent	Limiting Factor Depth	
			"	☐ Groundwater ☐ Restrictive Layer ☐ Bedrock

J. John Brochu — Site Evaluator Signature

194 — SE #

7/14/2014 — Date

Jul 22 14 05:25a J. John Brochu 207-968-3434 p.2