Bob St Pierre | Owner Copy | M11 L186

SUBSURFACE WASTEWATER DISPOSAL SYSTEM APPLICATION

Department of Human Services
Division of Health Engineering
(207) 289-3826

PROPERTY ADDRESS

Town Or Plantation	Augusta
Street Subdivision Lot #	Rte. 17

PROPERTY OWNERS NAME

Last: Champagne First: Richard

Applicant Name:	R-8 & 11 BOX 121
Mailing Address of Owner/Applicant (If Different)	Belgrade, Me. 04917

S-29 George Sanford 808

Caution: Permit Required

The Subsurface Wastewater Disposal System shall not be installed until a Permit is attached here by the Local Plumbing Inspector. The Permit shall authorize the owner or installer to install the disposal system in accordance with this application and the Maine Subsurface Wastewater Disposal Rules.

Permit 202

Owner/Applicant Statement

I certify that the information submitted is correct to the best of my knowledge and understand that any falsification is reason for the Local Plumbing Inspector to deny a Permit.

Richard J Champagne — Signature of Owner/Applicant — 5-2-86 Date

Caution: Inspection Required

I have inspected the installation authorized above and found it to be in compliance with the Subsurface Wastewater Disposal Rules.

Robert St Pierre — Local Plumbing Inspector Signature — 6/20/86 Date Approved

PERMIT INFORMATION

THIS APPLICATION IS FOR:

1. ☒ NEW SYSTEM
2. ☐ REPLACEMENT SYSTEM
3. ☐ EXPANDED SYSTEM
4. ☐ SEASONAL CONVERSION
5. ☐ EXPERIMENTAL SYSTEM

THIS APPLICATION REQUIRES:

1. ☒ NO RULE VARIANCE REQUIRED
2. ☐ NEW SYSTEM VARIANCE Attach New System Variance Form
   ☐ REPLACEMENT SYSTEM VARIANCE Attach Replacement System Variance Form
3. ☐ Requiring Local Plumbing Inspector Approval
4. ☐ Requires State and Local Plumbing Inspector Approval

INSTALLATION IS:

COMPLETE SYSTEM

1. ☒ NON-ENGINEERED SYSTEM
2. ☐ PRIMITIVE SYSTEM (Includes Alternative Toilet)
3. ☐ ENGINEERED (+2000 gpd)

INDIVIDUALLY INSTALLED COMPONENTS:

4. ☐ TREATMENT TANK (ONLY)
5. ☐ HOLDING TANK
6. ☐ ALTERNATIVE TOILET (ONLY)
7. ☐ NON-ENGINEERED DISPOSAL AREA (ONLY)
8. ☐ ENGINEERED DISPOSAL AREA (ONLY)
9. ☐ SEPARATED LAUNDRY SYSTEM

IF REPLACEMENT SYSTEM:

YEAR FAILING SYSTEM INSTALLED _____

THE FAILING SYSTEM IS:

1. ☐ BED 3. ☐ TRENCH
2. ☐ CHAMBER 4. ☐ OTHER: _____

DISPOSAL SYSTEM TO SERVE:

1. ☐ SINGLE FAMILY DWELLING
2. ☒ MODULAR OR MOBILE HOME
3. ☐ MULTIPLE FAMILY DWELLING
4. ☐ OTHER: _____ SPECIFY

SIZE OF PROPERTY	ZONING
20,000sq.	

TYPE OF WATER SUPPLY

City

DESIGN DETAILS (SYSTEM LAYOUT SHOWN ON PAGE 3)

TREATMENT TANK

1. ☒ SEPTIC: ☐ Regular ☐ Low Profile
2. ☐ AEROBIC

SIZE: 750 GALS.

WATER CONSERVATION

1. ☒ NONE
2. ☐ LOW VOLUME TOILET
3. ☐ SEPARATED LAUNDRY SYSTEM
4. ☐ ALTERNATIVE TOILET

SPECIFY: _____

PUMPING

1. NOT REQUIRED
2. ☒ MAY BE REQUIRED (DEPENDING ON TREATMENT TANK LOCATION AND ELEVATION)
3. ☐ REQUIRED

DOSE: 35 GALS.

CRITERIA USED FOR DESIGN FLOW (BEDROOMS, SEATING, EMPLOYEES, WATER RECORDS, ETC.)

2 bedr.

DESIGN FLOW: 180 (GALLONS/DAY)

SOIL CONDITIONS USED FOR DESIGN PURPOSES

PROFILE	CONDITION
2	A/C

DEPTH TO LIMITING FACTOR: 24/16.

SIZE RATINGS USED FOR DESIGN PURPOSES

1. ☐ SMALL
2. ☐ MEDIUM
3. ☒ MEDIUM-LARGE
4. ☐ LARGE
5. ☐ EXTRA LARGE

DISPOSAL AREA TYPE/SIZE

1. ☐ BED _____ Sq. Ft.
2. ☒ CHAMBER 288 Sq. Ft.
   ☒ REGULAR ☐ H-20
3. ☐ TRENCH _____ Linear Ft.
4. ☐ OTHER: _____

SITE EVALUATOR STATEMENT

(☐ SITE EVALUATION WAIVED BY LOCAL OPTION)

On 4/11/86 (date) I conducted a site evaluation for this project and certify that the data reported is accurate. The system I propose is in accordance with the Subsurface Wastewater Disposal Rules.

[signature] — Site Evaluator Signature — #51 SE# — 4/15/86 Date

* Local Plumbing Inspectors Signature if a Local Site Evaluation Waiver under a Local Option

SUBSURFACE WASTEWATER DISPOSAL SYSTEM APPLICATION

Department of Human Services
Division of Health Engineering

Town, City, Plantation: AUGUSTA
Street, Road, Subdivision: RT 17
Owners Name: CHAMPAGNE

SUBSURFACE WASTEWATER DISPOSAL PLAN

Scale 1" = 10' Ft.

①-⑨ = 4'x8' "L" CHAMBERS

A

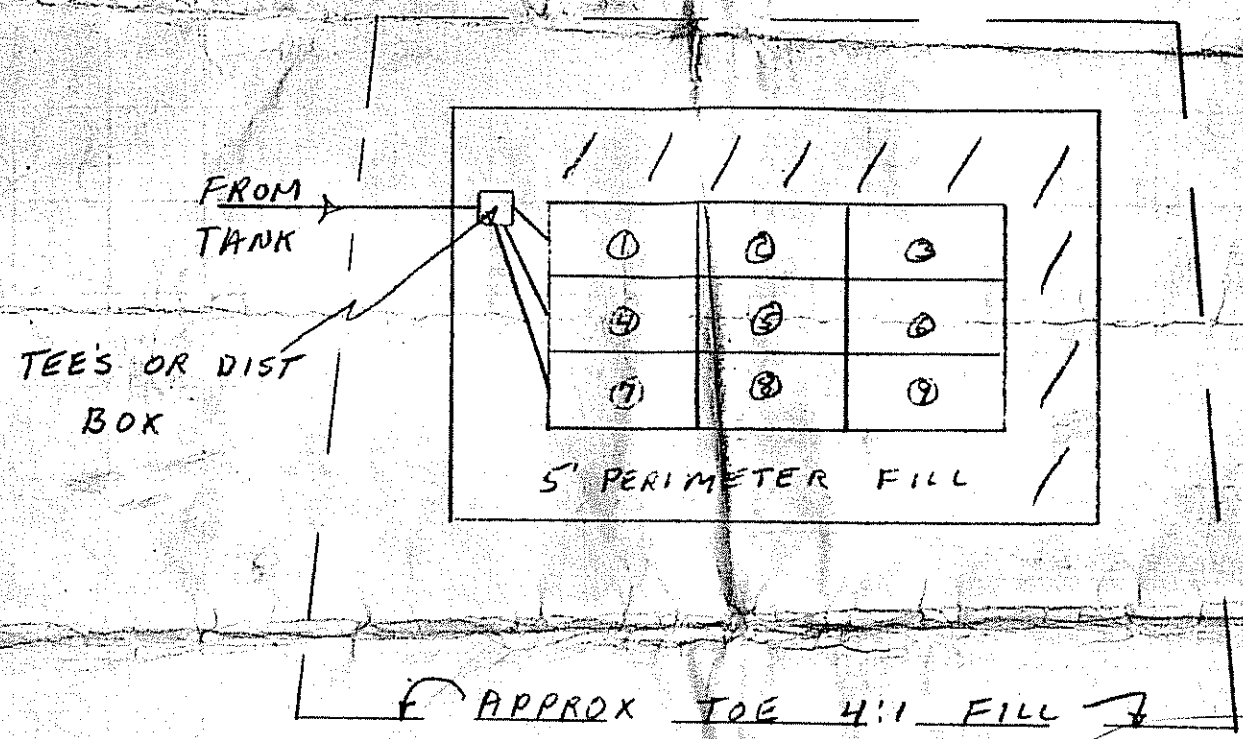

B

Checked & approved [signature]

FILL REQUIREMENTS

Depth of Fill (Upslope) 19"
Depth of Fill (Downslope) ___"

CONSTRUCTION ELEVATIONS

Reference Elevation is 0
Bottom of Disposal Area -33 -38"
Top of Distribution Lines or Chambers -20 -25"

ELEVATION REFERENCE POINT LOCATION & DESCRIPTION

TOP OF ROUND FLAG POLE BASE

DISPOSAL AREA CROSS SECTION

Scale:
Vertical: 1 inch = 5 Ft.
Horizontal: 1 inch = 10 Ft.

① 6" TOPSOIL CROWNED @ 3%
② 9 - 4'x8' "L" CHAMBERS
③ SANDY GRAVEL <10% PASSING #200 SIEVE

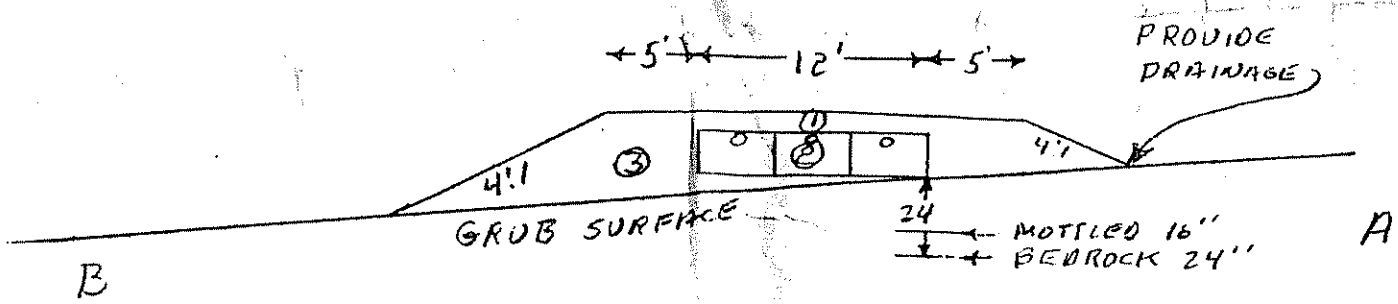

[signature] 51 4/15/86

City Copy

SUBSURFACE WASTEWATER DISPOSAL SYSTEM APPLICATION

Department of Human Services
Division of Health Engineering
(207) 289-3826

PROPERTY ADDRESS

Town Or Plantation	Augusta
Street Subdivision Lot #	Rte. 17

PROPERTY OWNERS NAME

Last: Champagne First: Richard

Applicant Name:	R-8 & 11 Box 121
Mailing Address of Owner/Applicant (If Different)	Belgrade, Me. 04917

S-29 George Sawyer Jr 808

AUGUSTA PERMIT # 702 TOWN COPY

Date Permit Issued: 5 2 86 $ 40 FEE ☐ If Double Fee Charged

George Sawyer Jr. L.P.I. # 808

Local Plumbing Inspector Signature

Owner/Applicant Statement

I certify that the information submitted is correct to the best of my knowledge and understand that any falsification is reason for the Local Plumbing Inspector to deny a Permit.

Richard J Champagne 5-2-86

Signature of Owner/Applicant Date

Caution: Inspection Required

I have inspected the installation authorized above and found it to be in compliance with the Subsurface Wastewater Disposal Rules.

Local Plumbing Inspector Signature Date Approved

PERMIT INFORMATION

THIS APPLICATION IS FOR:

1. ☒ NEW SYSTEM
2. ☐ REPLACEMENT SYSTEM
3. ☐ EXPANDED SYSTEM
4. ☐ SEASONAL CONVERSION
5. ☐ EXPERIMENTAL SYSTEM

THIS APPLICATION REQUIRES:

1. ☒ NO RULE VARIANCE REQUIRED
2. ☐ NEW SYSTEM VARIANCE Attach New System Variance Form
   ☐ REPLACEMENT SYSTEM VARIANCE Attach Replacement System Variance Form
3. ☐ Requiring Local Plumbing Inspector Approval
4. ☐ Requires State and Local Plumbing Inspector Approval

INSTALLATION IS:

COMPLETE SYSTEM

1. ☒ NON-ENGINEERED SYSTEM
2. ☐ PRIMITIVE SYSTEM (Includes Alternative Toilet)
3. ☐ ENGINEERED (+ 2000 gpd)

INDIVIDUALLY INSTALLED COMPONENTS:

4. ☐ TREATMENT TANK (ONLY)
5. ☐ HOLDING TANK
6. ☐ ALTERNATIVE TOILET (ONLY)
7. ☐ NON-ENGINEERED DISPOSAL AREA (ONLY)
8. ☐ ENGINEERED DISPOSAL AREA (ONLY)
9. ☐ SEPARATED LAUNDRY SYSTEM

IF REPLACEMENT SYSTEM:

YEAR FAILING SYSTEM INSTALLED _____

THE FAILING SYSTEM IS:

1. ☐ BED 3. ☐ TRENCH
2. ☐ CHAMBER 4. ☐ OTHER: _____

DISPOSAL SYSTEM TO SERVE:

1. ☐ SINGLE FAMILY DWELLING
2. ☒ MODULAR OR MOBILE HOME
3. ☐ MULTIPLE FAMILY DWELLING
4. ☐ OTHER _____ SPECIFY

SIZE OF PROPERTY: 20,000sq.

ZONING:

TYPE OF WATER SUPPLY: City

DESIGN DETAILS (SYSTEM LAYOUT SHOWN ON PAGE 3)

TREATMENT TANK

1. ☒ SEPTIC: ☐ Regular ☐ Low Profile
2. ☐ AEROBIC

SIZE: 750 GALS.

WATER CONSERVATION

1. ☒ NONE
2. ☐ LOW VOLUME TOILET
3. ☐ SEPARATED LAUNDRY SYSTEM
4. ☐ ALTERNATIVE TOILET

SPECIFY: _____

PUMPING

1. NOT REQUIRED
2. ☒ MAY BE REQUIRED (DEPENDING ON TREATMENT TANK LOCATION AND ELEVATION)
3. ☐ REQUIRED

DOSE: 35 GALS.

CRITERIA USED FOR DESIGN FLOW (BEDROOMS, SEATING, EMPLOYEES, WATER RECORDS, ETC.)

2 bedr.

DESIGN FLOW: 180 (GALLONS/DAY)

SOIL CONDITIONS USED FOR DESIGN PURPOSES

PROFILE	CONDITION
2	A/C

DEPTH TO LIMITING FACTOR: 24/16.

SIZE RATINGS USED FOR DESIGN PURPOSES

1. ☐ SMALL
2. ☐ MEDIUM
3. ☒ MEDIUM-LARGE
4. ☐ LARGE
5. ☐ EXTRA LARGE

DISPOSAL AREA TYPE/SIZE

1. ☐ BED _____ Sq. Ft.
2. ☒ CHAMBER 288 Sq. Ft.
   ☒ REGULAR ☐ H-20
3. ☐ TRENCH _____ Linear Ft.
4. ☐ OTHER: _____

SITE EVALUATOR STATEMENT

(☐ SITE EVALUATION WAIVED BY LOCAL OPTION)

On 4/11/86 (date) I conducted a site evaluation for this project and certify that the data reported is accurate. The system I propose is in accordance with the Subsurface Wastewater Disposal Rules.

[signature] #51 4/15/86

Site Evaluator Signature SE# Date

* Local Plumbing Inspectors Signature if a Local Site Evaluation Waiver under a Local Option

SUBSURFACE WASTEWATER DISPOSAL SYSTEM APPLICATION

Department of Human Services
Division of Health Engineering

Town, City, Plantation | Street, Road, Subdivision | Owners Name

SITE PLAN

Scale 1" = 60' Ft.
OR AS SHOWN

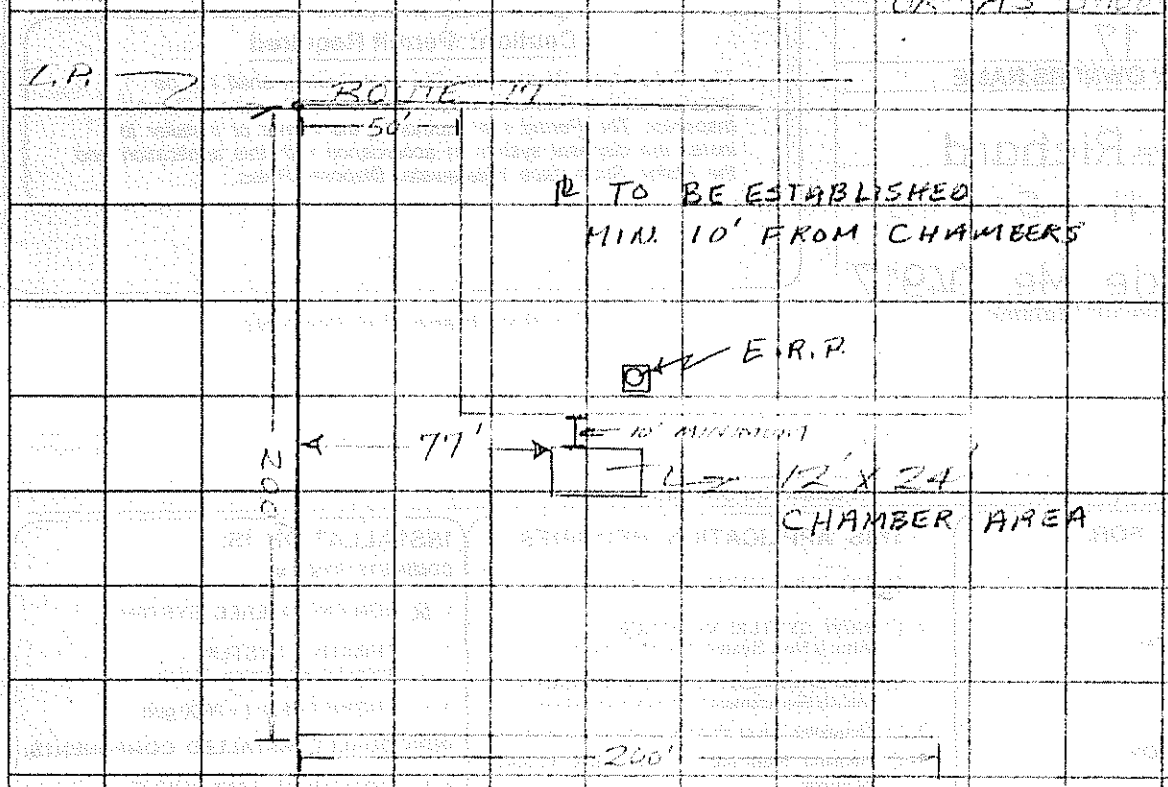

SITE LOCATION PLAN (Attach Map from Maine Atlas for New System Variance)

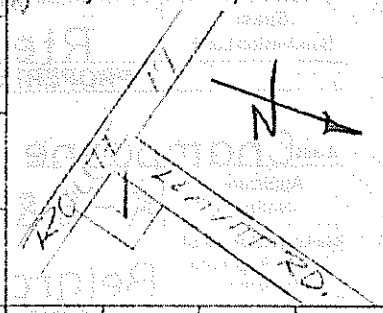

SOIL DESCRIPTION AND CLASSIFICATION (Location of Observation Holes Shown Above)

Observation Hole 1 + 2 ☐ Test Pit ☒ Boring

+1 " Depth of Organic Horizon Above Mineral Soil

DEPTH BELOW MINERAL SOIL SURFACE (Inches)

Depth	Texture	Consistency	Color	Mottling
0–6	S.L.	Friable	B	
6–16				16
16–24		Firm	GB.	
24	Bedrock at 24"			
40	B-1 +2 ARE SAME			

Soil (Profile)	Classification (Condition)	Slope	Limiting Factor	
2	A/C	4 %	16"–24"	☒ Ground Water 16" ☐ Restrictive Layer ☒ Bedrock = 24"

Observation Hole _____ ☐ Test Pit ☐ Boring

_____ " Depth of Organic Horizon Above Mineral Soil

DEPTH BELOW MINERAL SOIL SURFACE (Inches)

Depth	Texture	Consistency	Color	Mottling
0–50				

Soil (Profile)	Classification (Condition)	Slope	Limiting Factor	
		%		☐ Ground Water ☐ Restrictive Layer ☐ Bedrock

[signature] #51 4/15/86

Site Evaluator or Professional Engineer's Signature | SE# / PE# | Date

SUBSURFACE WASTEWATER DISPOSAL SYSTEM APPLICATION

Department of Human Services
Division of Health Engineering

Town, City, Plantation: AUGUSTA
Street, Road, Subdivision: RT 17
Owners Name: CHAMPAGNE

SUBSURFACE WASTEWATER DISPOSAL PLAN

Scale 1" = 10' Ft.

1-9 = 4'x8' "L" CHAMBERS

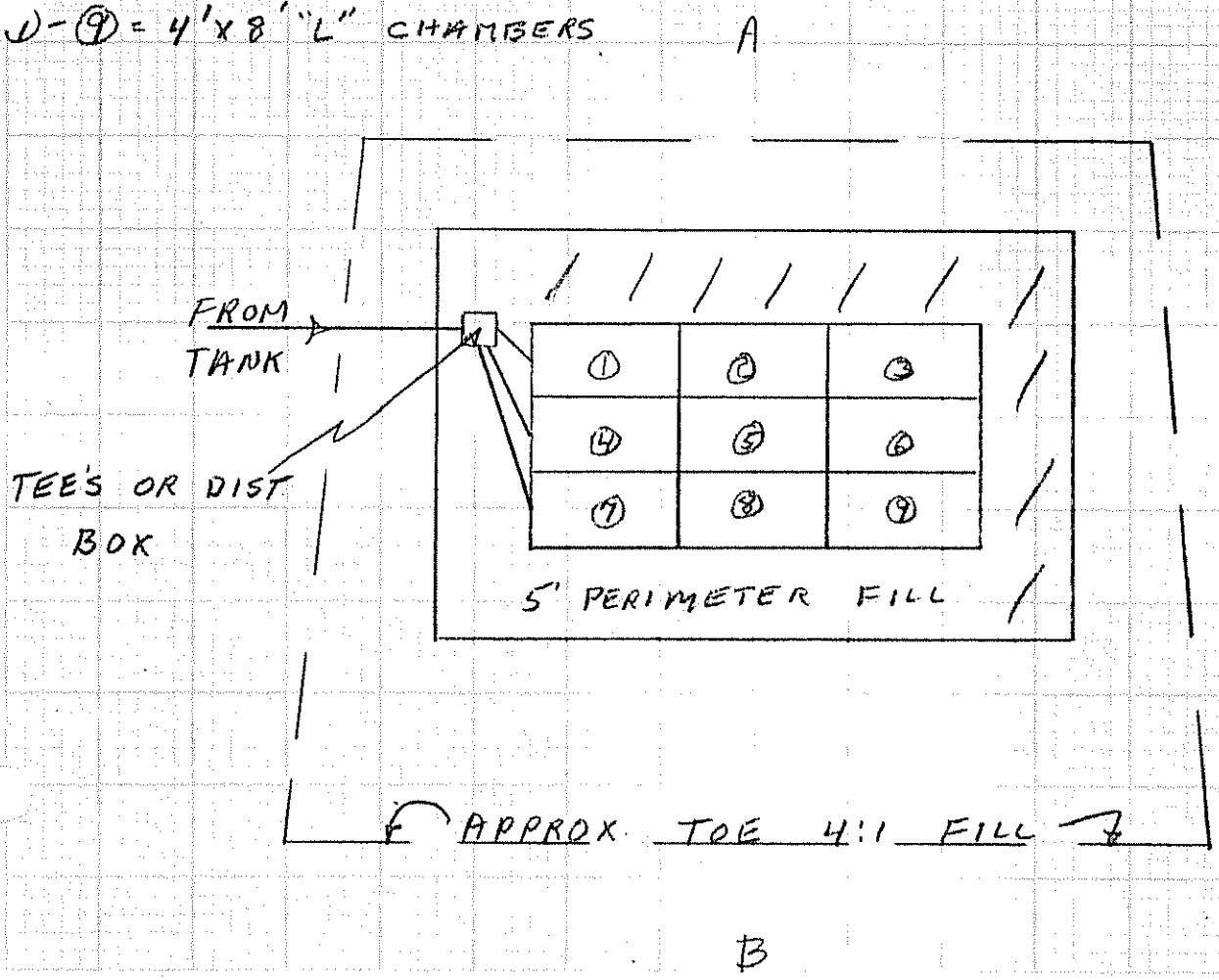

FILL REQUIREMENTS

Depth of Fill (Upslope): 19"
Depth of Fill (Downslope): ____"

CONSTRUCTION ELEVATIONS

Reference Elevation is: 0
Bottom of Disposal Area: -33"
Top of Distribution Lines or Chambers: -20"

ELEVATION REFERENCE POINT LOCATION & DESCRIPTION

TOP OF ROUND FLAG POLE BASE

DISPOSAL AREA CROSS SECTION

Scale:
Vertical: 1 inch = 5 Ft.
Horizontal: 1 inch = 10 Ft.

1. 6" TOPSOIL CROWNED @ 3%
2. 9 - 4'x8' "L" CHAMBERS
3. SANDY GRAVEL <10% PASSING #200 SIEVE

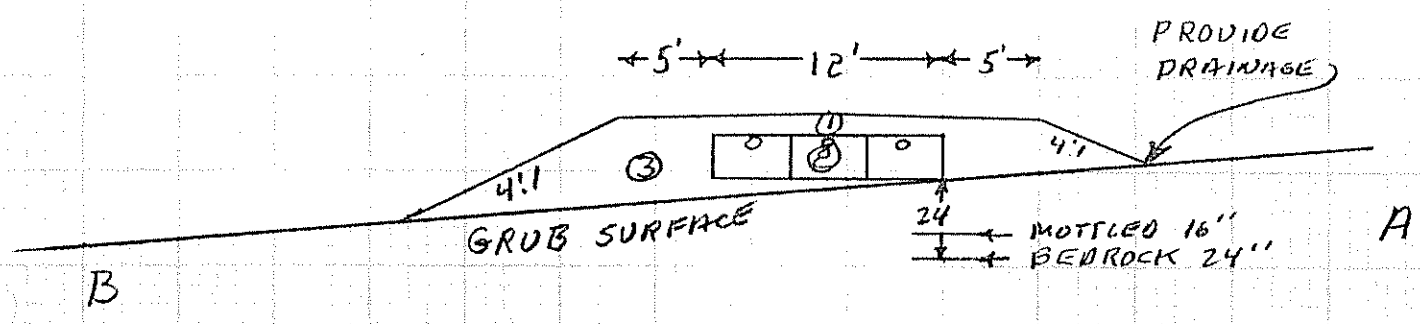

Site Evaluator Signature: [signature]
SE#: 51
Date: 4/15/86