SUBSURFACE WASTEWATER DISPOSAL SYSTEM APPLICATION

Department of Human Services
Division of Health Engineering
(207) 289-3826

M11 L63

AUGUSTA PERMIT # 997 TOWN COPY

Date Permit Issued: 4/9/87 $ 4000 FEE ☐ If Double Fee Charged

Local Plumbing Inspector Signature: [signature] L.P.I. # 808

PROPERTY ADDRESS

Town Or Plantation	AUGUSTA
Street Subdivision Lot #	ROUTE 105 (So. Belfast Ave)

PROPERTY OWNERS NAME

Last: BARNES First: KENNETH LISA +

Applicant Name:	
Mailing Address of Owner/Applicant (If Different)	1029 Cony Road AUGUSTA, MAINE 04330

Owner/Applicant Statement

I certify that the information submitted is correct to the best of my knowledge and understand that any falsification is reason for the Local Plumbing Inspector to deny a Permit.

Lisa Barnes 4/10/87

Signature of Owner/Applicant Date

Caution: Inspection Required

I have inspected the installation authorized above and found it to be in compliance with the Subsurface Wastewater Disposal Rules.

Robert St Pierre 4/22/87

Local Plumbing Inspector Signature Date Approved

PERMIT INFORMATION

THIS APPLICATION IS FOR:

1. ☒ NEW SYSTEM
2. ☐ REPLACEMENT SYSTEM
3. ☐ EXPANDED SYSTEM
4. ☐ SEASONAL CONVERSION
5. ☐ EXPERIMENTAL SYSTEM

THIS APPLICATION REQUIRES:

1. ☒ NO RULE VARIANCE REQUIRED
2. ☐ NEW SYSTEM VARIANCE Attach New System Variance Form
   ☐ REPLACEMENT SYSTEM VARIANCE Attach Replacement System Variance Form
3. ☐ Requiring Local Plumbing Inspector Approval
4. ☐ Requires State and Local Plumbing Inspector Approval

INSTALLATION IS:

COMPLETE SYSTEM

1. ☒ NON-ENGINEERED SYSTEM
2. ☐ PRIMITIVE SYSTEM (Includes Alternative Toilet)
3. ☐ ENGINEERED (+2000 gpd)

INDIVIDUALLY INSTALLED COMPONENTS:

4. ☐ TREATMENT TANK (ONLY)
5. ☐ HOLDING TANK
6. ☐ ALTERNATIVE TOILET (ONLY)
7. ☐ NON-ENGINEERED DISPOSAL AREA (ONLY)
8. ☐ ENGINEERED DISPOSAL AREA (ONLY)
9. ☐ SEPARATED LAUNDRY SYSTEM

IF REPLACEMENT SYSTEM:

YEAR FAILING SYSTEM INSTALLED _____

THE FAILING SYSTEM IS:

1. ☐ BED 3. ☐ TRENCH
2. ☐ CHAMBER 4. ☐ OTHER: _____

DISPOSAL SYSTEM TO SERVE:

1. ☒ SINGLE FAMILY DWELLING
2. ☐ MODULAR OR MOBILE HOME
3. ☐ MULTIPLE FAMILY DWELLING
4. ☐ OTHER _____ SPECIFY

SIZE OF PROPERTY: 4± Acres

ZONING: ?

TYPE OF WATER SUPPLY: Drilled Well

DESIGN DETAILS (SYSTEM LAYOUT SHOWN ON PAGE 3)

TREATMENT TANK

1. ☒ SEPTIC: ☒ Regular ☐ Low Profile
2. ☐ AEROBIC

SIZE: 1000 GALS.

WATER CONSERVATION

1. ☒ NONE
2. ☐ LOW VOLUME TOILET
3. ☐ SEPARATED LAUNDRY SYSTEM
4. ☐ ALTERNATIVE TOILET

SPECIFY: _____

PUMPING

1. ☐ NOT REQUIRED
2. ☒ MAY BE REQUIRED (DEPENDING ON TREATMENT TANK LOCATION AND ELEVATION)
3. ☐ REQUIRED

DOSE: _____ GALS.

CRITERIA USED FOR DESIGN FLOW (BEDROOMS, SEATING, EMPLOYEES, WATER RECORDS, ETC.)

3 Bedroom

DESIGN FLOW: 270 (GALLONS/DAY)

SOIL CONDITIONS USED FOR DESIGN PURPOSES

PROFILE	CONDITION
2	C (A)

DEPTH TO LIMITING FACTOR: 18"

SIZE RATINGS USED FOR DESIGN PURPOSES

1. ☐ SMALL
2. ☐ MEDIUM
3. ☒ MEDIUM-LARGE
4. ☐ LARGE
5. ☐ EXTRA LARGE

DISPOSAL AREA TYPE/SIZE

1. ☒ BED 900 Sq. Ft.
2. ☐ CHAMBER _____ Sq. Ft.
   ☐ REGULAR ☐ H-20
3. ☐ TRENCH _____ Linear Ft.
4. ☐ OTHER: _____

SITE EVALUATOR STATEMENT

☐ SITE EVALUATION WAIVED BY LOCAL OPTION)

On 8-19-86 (date) I conducted a site evaluation for this project and certify that the data reported is accurate. The system I propose is in accordance with the Subsurface Wastewater Disposal Rules.

[signature] 132 8-19-86

Site Evaluator Signature SE# Date

* Local Plumbing Inspectors Signature if a Local Site Evaluation Waiver under a Local Option

SUBSURFACE WASTEWATER DISPOSAL SYSTEM APPLICATION

Department of Human Services
Division of Health Engineering

Town, City, Plantation: AUGUSTA

Street, Road, Subdivision: ROUTE 105

Owners Name: KENNETH BARNES

SITE PLAN

Scale 1" = 30' Ft.

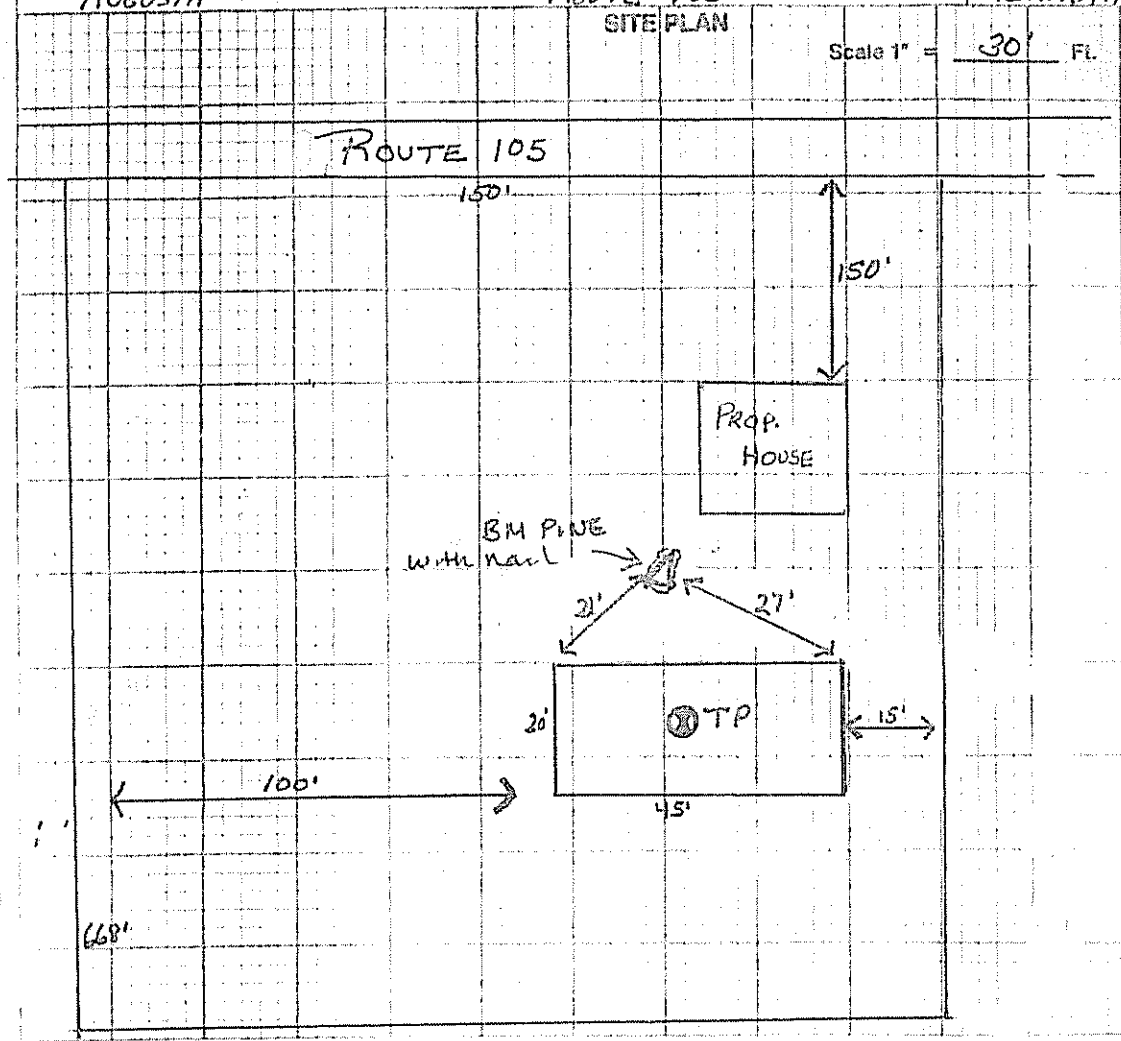

SITE LOCATION PLAN (Attach Map from Maine Atlas for New System Variance)

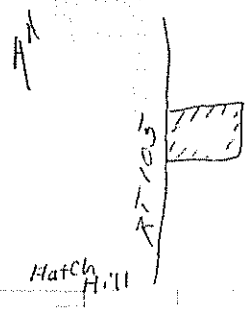

1. Property lines as indicated by owner.
2. System shall be installed in accordance with Maine Plumbing Code.
3. Scarify original ground before placing fill.
4. Fill shall be clear sandy loam placed in 8" compacted lifts.
5. Bed shall be at least 20' from house. Tank shall be at least 8' from house.
6. Well shall be at least 100' from tank and bed.

SOIL DESCRIPTION AND CLASSIFICATION (Location of Observation Holes Shown Above)

Observation Hole _____ ☒ Test Pit ☐ Boring

/ " Depth of Organic Horizon Above Mineral Soil

DEPTH BELOW MINERAL SOIL SURFACE (Inches)

Depth	Texture	Consistency	Color	Mottling
0	Sandy	Friable	Brown	
6	Loam		Reddish Brown	
10				
15				
20				Evident
			Yellow Brown	
30	POSSIBLE BEDROCK			
40				
50				

Soil	Classification	Slope	Limiting Factor	
2 (Profile)	C(A) (Condition)	4-9 %	18	☒ Ground Water ☐ Restrictive Layer ☐ Bedrock

Observation Hole _____ ☐ Test Pit ☐ Boring

_____ " Depth of Organic Horizon Above Mineral Soil

DEPTH BELOW MINERAL SOIL SURFACE (Inches)

Depth	Texture	Consistency	Color	Mottling
0				
6				
10				
15				
20				
30				
40				
50				

Soil	Classification	Slope	Limiting Factor	
(Profile)	(Condition)	%		☐ Ground Water ☐ Restrictive Layer ☐ Bedrock

Site Evaluator Signature: [signature]

SE#: 132

Date: 8-19-86

HHE-200 Rev. 1/84

SUBSURFACE WASTEWATER DISPOSAL SYSTEM APPLICATION

Division of Health Engineering

Town, City, Plantation: AUGUSTA

Street, Road, Subdivision: ROUTE 105

Owners Name: KENNETH BARNES

SUBSURFACE WASTEWATER DISPOSAL PLAN

Scale 1" = 20 Ft.

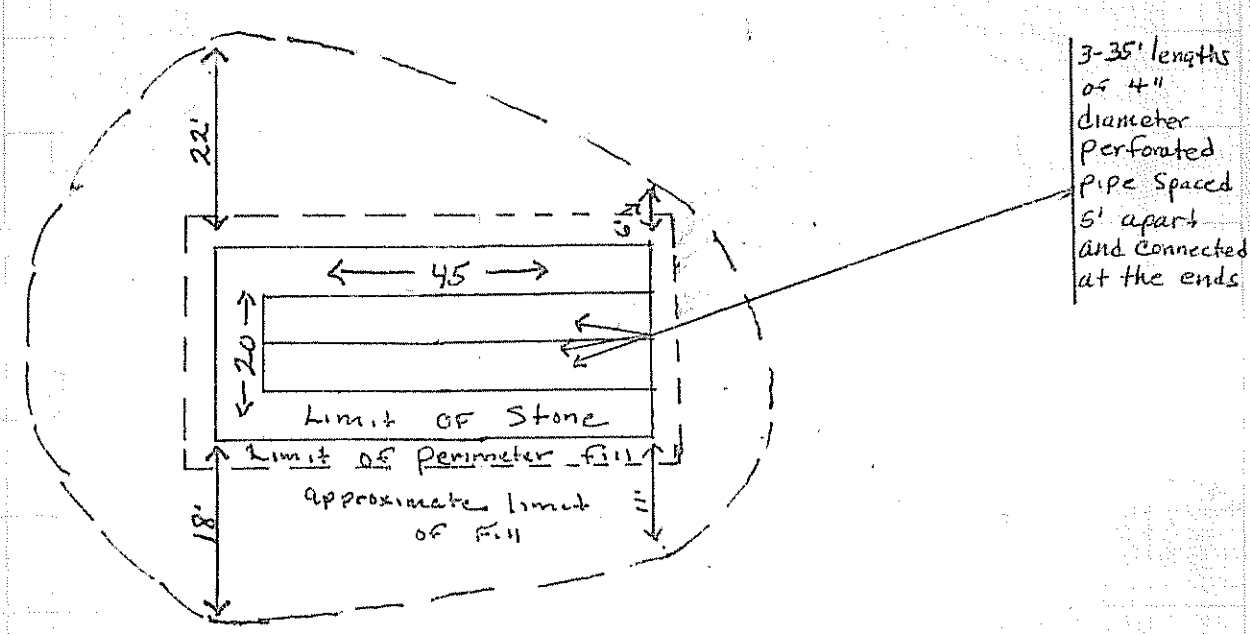

+5 ~~45~~ +48"

FILL REQUIREMENTS		CONSTRUCTION ELEVATIONS		ELEVATION REFERENCE POINT LOCATION & DESCRIPTION
Depth of Fill (Upslope)	18"	Reference Elevation is	0'0"	BM PINE WITH NAIL
Depth of Fill (Downslope)	40"	Bottom of Disposal Area	26	
		Top of Distribution Lines or Chambers	15	

DISPOSAL AREA CROSS SECTION

Scale:
Vertical: 1 inch = 5 Ft.
Horizontal: 1 inch = 20 Ft.

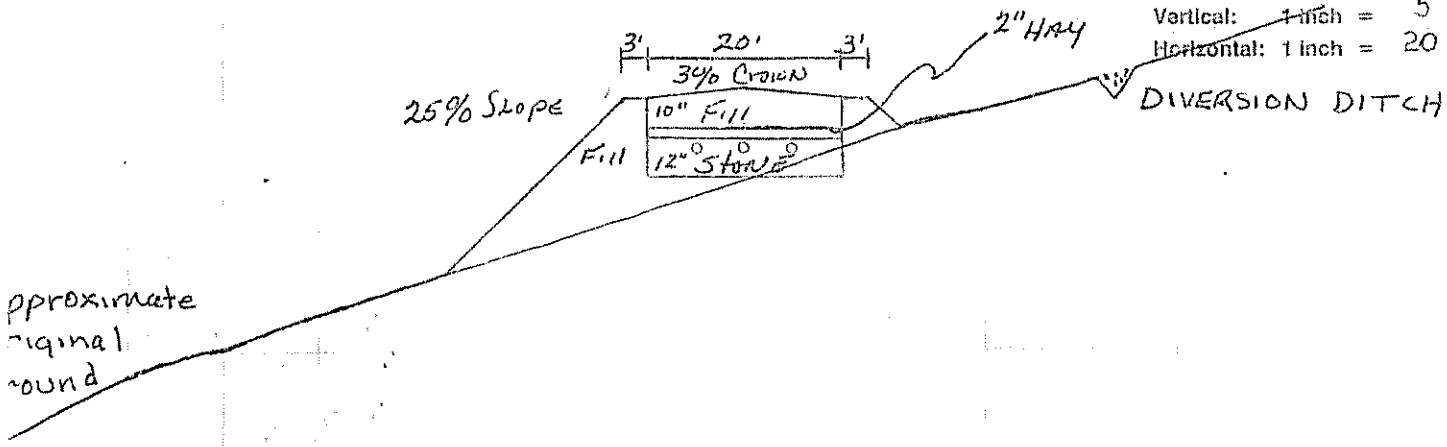

SECTION
A-A

Terry D. Adams — Site Evaluator Signature

132 — SE #

8-19-86 — Date

HHE-200 Rev.1/84