SUBSURFACE WASTEWATER DISPOSAL SYSTEM APPLICATION

Maine Department of Human Services
Division of Health Engineering, Station 10
(207) 287-5672 FAX (207) 287-4172

PROPERTY LOCATION

City, Town, or Plantation	AUGUSTA
Street or Road	347 LEIGHTON ROAD
Subdivision, Lot #	

>> Caution: Permit Required -- Attach In Space Below <<

AUGUSTA 4430 TOWN COPY
Date Permit Issued: 6/12/00 $ 100.00 FEE ☐ Double Fee Charged
L.P.I. # 850
Local Plumbing Inspector Signature

OWNER/APPLICANT INFORMATION

Name (last, first, MI): GOODWILL INDUSTRIES (Owner / Applicant)

Mailing Address of ☐ Owner ☒ Applicant: SHERIDAN CORPORATION, P.O. BOX 359, FAIRFIELD, ME ~~04937~~, ATTN: TIM WEYMOUTH

Daytime Tel. #: 453-9311

Municipal Tax Map # 9 Lot # 43

Owner or Applicant Statement

I state that the information submitted is correct to the best of my knowledge and understand that any falsification is reason for the Department and/or Local Plumbing Inspector to deny a Permit.

Signature of Owner or Applicant — Date 6/16/00

Caution: Inspections Required

I have inspected the installation authorized above and found it to be in compliance with the Subsurface Wastewater Disposal Rules Application.

Local Plumbing Inspector Signature — (1st) Date Approved 7/13/00 — (2nd) Date Approved 7/14/00

PERMIT INFORMATION

TYPE OF APPLICATION
1. ☒ First Time System
2. ☐ Replacement System
Type Replaced: ____
Year Installed: ____
3. ☐ Expanded System
a. ☐ One-time exempted
b. ☐ Non-exempted
4. ☐ Experimental System
5. ☐ Seasonal Conversion

THIS APPLICATION REQUIRES
1. ☒ No Rule Variance
2. ☐ First Time System Variance
a. ☐ Local Plumbing Inspector Approval
b. ☐ State & Local Plumbing Inspector Approval
3. Replacement System Variance
a. ☐ Local Plumbing Inspector Approval
b. ☐ State & Local Plumbing Inspector Approval
4. ☐ Minimum Lot Size Variance
5. ☐ Seasonal Conversion Approval

DISPOSAL SYSTEM COMPONENT(S)
1. ☒ Complete Non-engineered System
2. ☐ Primitive System (graywater & alt toilet)
3. ☐ Alternative Toilet, specify: ____
4. ☐ Non-Engineered Treatment Tank (only)
5. ☐ Holding Tank, ____ gallons
6. ☐ Non-engineered Disposal Field (only)
7. ☐ Separated Laundry System
8. ☐ Complete Engineered System (2000 gpd or more)
9. ☐ Engineered Treatment Tank (only)
10. ☐ Engineered Disposal Field (only)
11. ☐ Pre-treatment, specify:
12. ☐ Miscellaneous components

SIZE OF PROPERTY: 5 ☐ sq. ft. ☒ acres

SHORELAND ZONING: ☐ Yes ☒ No

DISPOSAL SYSTEM TO SERVE
1. ☐ Single Family Dwelling Unit, No. of Bedrooms: ____
2. ☐ Multiple Family Dwelling, No. of Units: ____
3. ☒ Other: 124 EMPLOYEES (SPECIFY)

TYPE OF WATER SUPPLY
1. ☐ Drilled Well 2. ☐ Dug Well 3. ☐ Private
4. ☒ Public 5. ☐ Other:

DESIGN DETAILS (SYSTEM LAYOUT SHOWN ON PAGE 3)

TREATMENT TANK
1. ☒ Concrete
a. ☒ Regular
b. ☐ Low Profile
2. ☐ Plastic
3. ☐ Other: ____
CAPACITY 2-1500 gallons

DISPOSAL FIELD TYPE & SIZE
1. ☐ Stone Bed 2. ☐ Stone Trench
3. ☒ Proprietary Device
a. ☒ Cluster array c. ☐ Linear
b. ☐ Regular load d. ☒ H-20 load
4. ☐ Other: ____
SIZE 6/44 ☒ sq. ft. ☐ lin. ft.

GARBAGE DISPOSAL UNIT
1. ☒ No 3. ☐ Maybe
2. ☐ Yes >> Specify one below:
a. ☐ Multi-compartment Tank
b. ☐ Tanks in Series
c. ☐ Increase in Tank Capacity
d. ☐ Filter on Tank Outlet

DESIGN FLOW
1861 gallons per day
BASED ON:
1. ☒ Table 501.1 (dwelling unit(s)
2. ☐ Table 501.2 (other facilities)
SHOW CALCULATIONS -- for other facilities --
124 EMPLOYEES AT 15gpd EACH
3. ☐ Section 503.0 (meter readings)
ATTACH WATER-METER DATA

SOIL DATA & DESIGN CLASS
PROFILE CONDITION DESIGN
7 / C / 1
at Observation Hole # TP-1
Depth 18" Elevation ____"
OF MOST LIMITING SOIL FACTOR

DISPOSAL FIELD SIZING
1. ☐ Small -- 2.0 sq. ft./gpd
2. ☐ Medium -- 2.6 sq. ft./gpd
3. ☒ Medium-Large -- 3.3 sq. ft./gpd
4. ☐ Large -- 4.1 sq. ft./gpd
5. ☐ Extra Large -- 5.0 sq. ft./gpd

PUMPING
1. ☒ Not Required
2. ☐ May Be Required
3. ☐ Required >> Specify only for engineered or experimental systems:
DOSE: gallons

SITE EVALUATOR STATEMENT

I certify that on 3-30-00 + 5/24/00 (date) I completed a site evaluation on this property and state that the data reported are accurate and that the proposed system is in compliance with the State of Maine Subsurface Wastewater Disposal Rules (10-144A CMR 241).

REVISED 5/24/00

Site Evaluator Signature — SE # 262 — Date 3-31-00

Site Evaluator Name Printed: MARK CENCI — Telephone # 797-2110

SUBSURFACE WASTEWATER DISPOSAL SYSTEM APPLICATION

Department of Human Services
Division of Health Engineering
(207) 287-5672 FAX (207) 287-4172

Town, City, Plantation: AUGUSTA
Street, Road Subdivision: LEIGHTON ROAD
Owner's Name: GOODWILL INDUSTRIES

SITE PLAN, Scale 1" = 50 Ft. or as shown

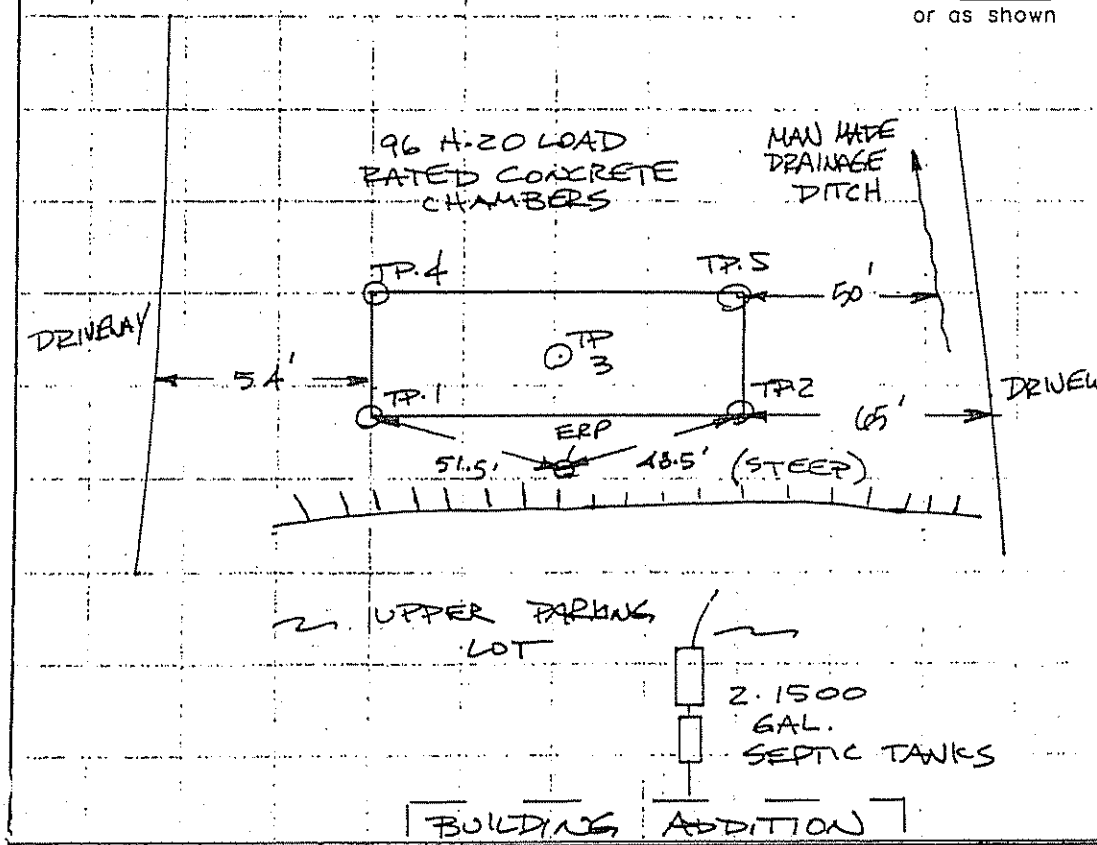

SITE LOCATION PLAN (Map from Maine Atlas recommended)

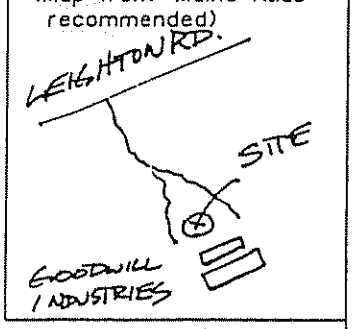

SOIL DESCRIPTION AND CLASSIFICATION (Location of Observation Holes Shown Above)

Observation Hole TP-1 ☒ Test Pit ☐ Boring
_____ " Depth of Organic Horizon Above Mineral Soil

Depth below mineral soil surface (inches)	Texture	Consistency	Color	Mottling
0–10	GRAVELLY SAND FILL	LOOSE	BRN.	WATER TABLE
10–40	SILT LOAM	FIRM	GRAY	

Soil Classification	Slope	Limiting Factor	
7 (Profile) D (Condition)	1-2 %	14"	☒ Ground Water ☐ Restrictive Layer ☐ Bedrock ☐ Pit Depth

Observation Hole TP-2 ☒ Test Pit ☐ Boring
_____ " Depth of Organic Horizon Above Mineral Soil

Depth below mineral soil surface (inches)	Texture	Consistency	Color	Mottling
0–10	GRAVELLY SAND FILL	LOOSE	BRN	
10–40	SILT LOAM	FIRM	GRAY	COMMON

Soil Classification	Slope	Limiting Factor	
7 (Profile) D (Condition)	1-2 %	14"	☒ Ground Water ☐ Restrictive Layer ☐ Bedrock ☐ Pit Depth

[signature] — Site Evaluator Signature
262 — SE #
5/24/00 — Date

SWEET ASSOCIATES

155 GRAY ROAD FALMOUTH, MAINE 04105

(207)797-2110 FAX(207)878-2364

PROJECT: GOODWILL INDUSTRIES LOCATION: LEIGHTON RD. AUGUSTA

SOIL DESCRIPTION AND CLASSIFICATION

(Location of Observation Holes Shown Above)

Observation Hole TP-3 ☒ Test Pit ☐ Boring

_____" Depth of Organic Horizon Above Mineral Soil

DEPTH BELOW MINERAL SOIL SURFACE (Inches)

Depth	Texture	Consistency	Color	Mottling
0–6	GRAVELLY SAND FILL	LOOSE	BRN.	
6–15				
15–20				WATER TABLE
20–30	SILT LOAM	FIRM	GRAY	
30–50				

Soil Profile	Class	Slope	Limiting Factor	
7	C	1-2 %	14"	☒ Ground Water ☐ Restrictive Layer ☐ Bedrock

SOIL DESCRIPTION AND CLASSIFICATION

(Location of Observation Holes Shown Above)

Observation Hole TP-4 ☒ Test Pit ☐ Boring

_____" Depth of Organic Horizon Above Mineral Soil

DEPTH BELOW MINERAL SOIL SURFACE (Inches)

Depth	Texture	Consistency	Color	Mottling
0–6	GRAVELLY			
6–15	SAND FILL	LOOSE	BRN.	
15–20				
20–30	SILT LOAM	FIRM	GRAY	COMMON
30–50				

Soil Profile	Class	Slope	Limiting Factor	
7	C	__%	26"	☒ Ground Water ☒ Restrictive Layer ☐ Bedrock

SOIL DESCRIPTION AND CLASSIFICATION

(Location of Observation Holes Shown Above)

Observation Hole TP-5 ☒ Test Pit ☐ Boring

_____" Depth of Organic Horizon Above Mineral Soil

DEPTH BELOW MINERAL SOIL SURFACE (Inches)

Depth	Texture	Consistency	Color	Mottling
0–6	GRAVELLY SAND FILL	LOOSE	BRN.	
6–20				
20–30	SILT LOAM	FIRM	GRAY	COMMON
30–50				

Soil Profile	Class	Slope	Limiting Factor	
7	C	1-2 %	18"	☒ Ground Water ☒ Restrictive Layer ☐ Bedrock

SOIL DESCRIPTION AND CLASSIFICATION

(Location of Observation Holes Shown Above)

Observation Hole _____ ☐ Test Pit ☐ Boring

_____" Depth of Organic Horizon Above Mineral Soil

DEPTH BELOW MINERAL SOIL SURFACE (Inches)

Depth	Texture	Consistency	Color	Mottling
0–50				

Soil Profile	Class	Slope	Limiting Factor	
		__%	__"	☐ Ground Water ☐ Restrictive Layer ☐ Bedrock

Mark Cerri — Site Evaluator Signature

262 — SE #

5-24-00 — Date

SUBSURFACE WASTEWATER DISPOSAL SYSTEM APPLICATION

Department of Human Services
Division of Health Engineering
(207) 287-5672 FAX (207) 287-4172

Town, City, Plantation	Street, Road, Subdivision	Owner's Name
AUGUSTA	LEIGHTON ROAD	GOODWILL INDUSTRIES

SUBSURFACE WASTEWATER DISPOSAL PLAN — SCALE 1" = 30 FT.

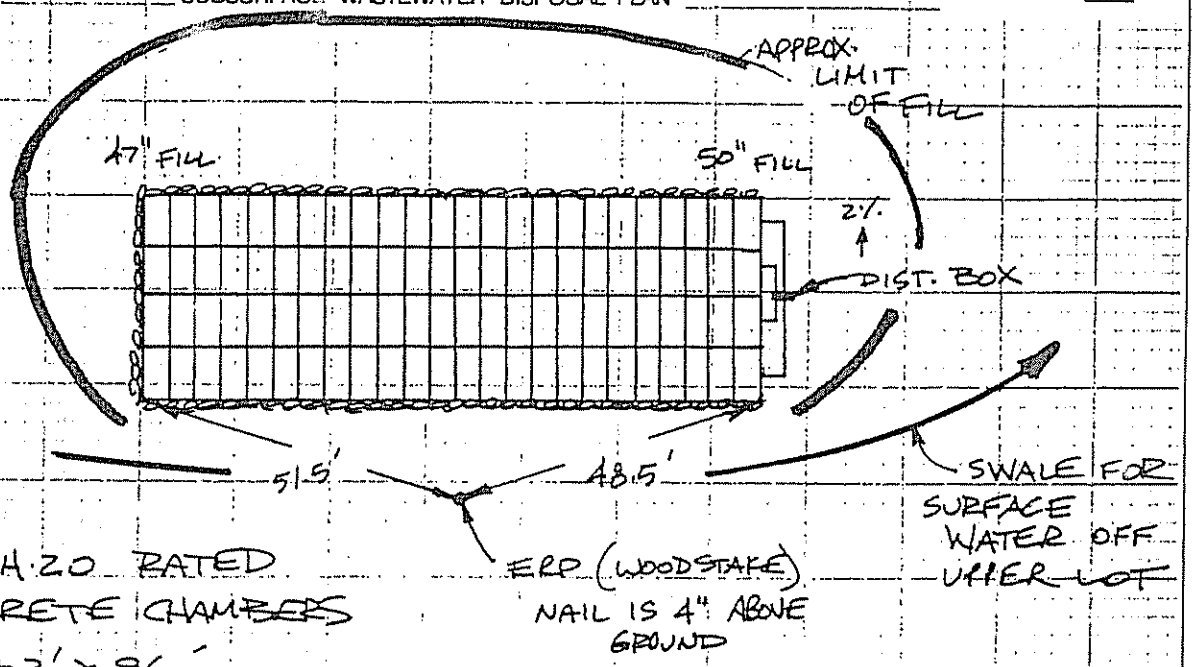

FILL REQUIREMENTS		CONSTRUCTION ELEVATIONS		ELEVATION REFERENCE POINT	
Depth of Fill (Upslope)	37"-41"	Finished Grade Elevation	-1"	Location & Description	NAIL IN PINK TAG ON WOODSTAKE
Depth of Fill (Downslope)	47"-50"	Top of ~~Distribution Pipe or~~ Proprietary Device	-19"		
		Bottom of Disposal Area (CHAMBERS)	-32"	Reference Elevation	0"

DISPOSAL AREA CROSS SECTION

USE GRAVELLY COARSE SAND FILL

SCALE:
VERTICAL: 1" = 10'
HORIZONTAL: 1" = 10'

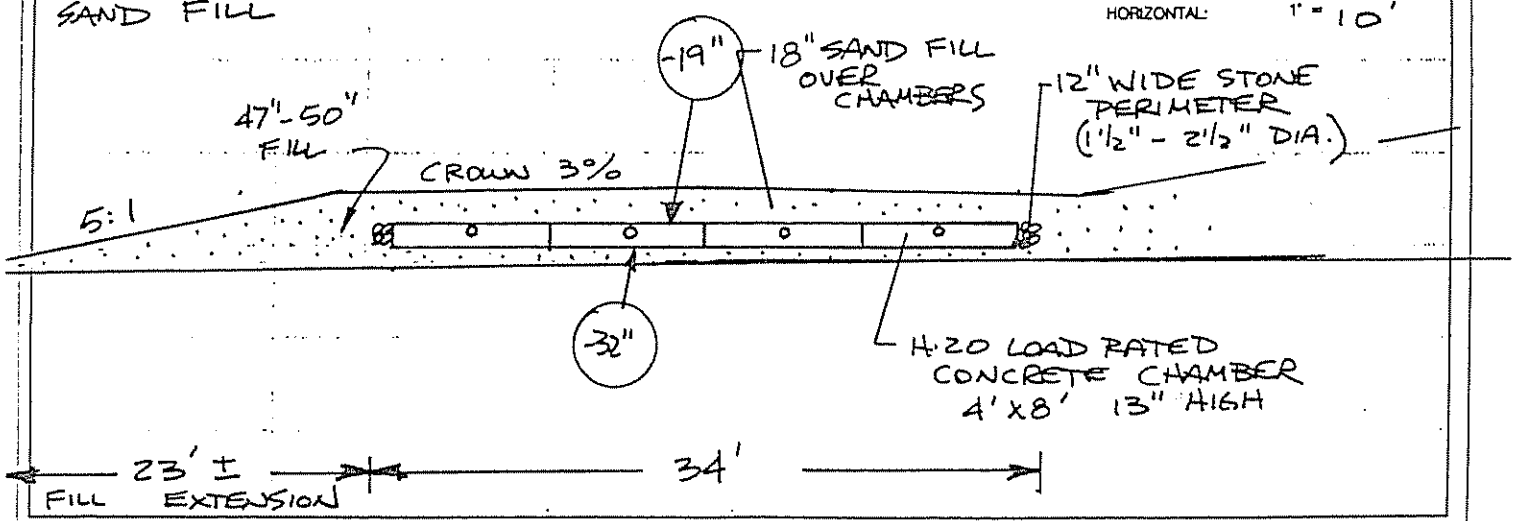

Site Evaluator Signature	SE #	Date
Mark Ouellette	262	5/24/00