SUBSURFACE WASTEWATER DISPOSAL SYSTEM APPLICATION

Department of Human Services
Division of Health Engineering
(207)289-3826

PROPERTY ADDRESS

Town Or Plantation	Augusta
Street Subdivision Lot #	491 Western Avenue

PROPERTY OWNERS NAME

Last: Millett First: Jerome

Applicant Name:	491 Western Avenue Associates
Mailing Address of Owner/Applicant (If Different)	155 Center Street Auburn, Maine 04210

AUGUSTA PERMIT # 1,723 TOWN COPY

Date Permit Issued: 8/31/89 $ 140.00 FEE ☐ If Double Fee Charged

Local Plumbing Inspector Signature L.P.I. # 1808

Owner/Applicant Statement

I certify that the Information submitted is correct to the best of my knowledge and understand that any falsification is reason for the Local Plumbing Inspector to deny a Permit.

Signature of Owner/Applicant /REP. 8/31/89 Date

Caution: Inspection Required

I have inspected the installation authorized above and found it to be in compliance with the Subsurface Wastewater Disposal Rules.

Local Plumbing Inspector Signature Sep. 7, 1989 Date Approved

PERMIT INFORMATION

THIS APPLICATION IS FOR:
1. ☒ NEW SYSTEM
2. ☐ REPLACEMENT SYSTEM
3. ☐ EXPANDED SYSTEM
4. ☐ EXPERIMENTAL SYSTEM

SEASONAL CONVERSION
to be completed by the LPI
5. ☐ SYSTEM COMPLIES WITH RULES
6. ☐ CONNECTED TO SANITARY SEWER
7. ☐ SYSTEM INSTALLED – P# _____
8. ☐ SYSTEM DESIGN RECORDED AND ATTACHED

IF REPLACEMENT SYSTEM:
YEAR FAILING SYSTEM INSTALLED _____
THE FAILING SYSTEM IS:
1. ☐ BED 3. ☐ TRENCH
2. ☐ CHAMBER 4. ☐ OTHER: _____

THIS APPLICATION REQUIRES:
1. ☒ NO RULE VARIANCE
2. ☐ NEW SYSTEM VARIANCE Attach New System Variance Form
3. ☐ REPLACEMENT SYSTEM VARIANCE Attach Replacement System Variance Form
a. ☐ Requiring Local Plumbing Inspector Approval
b. ☐ Requires State and Local Plumbing Inspector Approval
4. ☐ MINIMUM LOT SIZE VARIANCE

DISPOSAL SYSTEM TO SERVE:
1. ☐ SINGLE FAMILY DWELLING
2. ☐ MODULAR OR MOBILE HOME
3. ☐ MULTIPLE FAMILY DWELLING
4. ☒ OTHER Auto Dealership
SPECIFY Floor Drain

INSTALLATION IS:
COMPLETE SYSTEM
1. ☒ NON-ENGINEERED SYSTEM
2. ☐ PRIMITIVE SYSTEM (Includes Alternative Toilet)
3. ☐ ENGINEERED (+2000 gpd)
INDIVIDUALLY INSTALLED COMPONENTS:
4. ☐ TREATMENT TANK (ONLY)
5. ☐ HOLDING TANK _____ GAL
6. ☐ ALTERNATIVE TOILET (ONLY)
7. ☐ NON-ENGINEERED DISPOSAL AREA (ONLY)
8. ☐ ENGINEERED DISPOSAL AREA (ONLY)
9. ☐ SEPARATED LAUNDRY SYSTEM

SIZE OF PROPERTY	ZONING
6 Acres	CC Regional Business

TYPE OF WATER SUPPLY
Public

DESIGN DETAILS (SYSTEM LAYOUT SHOWN ON PAGE 3)

TREATMENT TANK
1. ☐ SEPTIC: ☐ Regular ☐ Low Profile
2. ☐ AEROBIC
Sand and Oil Trap
SIZE: _____ GALS.

WATER CONSERVATION
1. ☒ NONE
2. ☐ LOW VOLUME TOILET
3. ☐ SEPARATED LAUNDRY SYSTEM
4. ☐ ALTERNATIVE TOILET
SPECIFY: _____

PUMPING
1. ☒ NOT REQUIRED
2. ☐ MAY BE REQUIRED (DEPENDING ON TREATMENT TANK LOCATION AND ELEVATION)
3. ☐ REQUIRED
DOSE: _____ GALS.

CRITERIA USED FOR DESIGN FLOW (BEDROOMS, SEATING, EMPLOYEES, WATER RECORDS, ETC.)
Water records from previous location.

SOIL CONDITIONS USED FOR DESIGN PURPOSES

PROFILE	CONDITION
1/3	C

DEPTH TO LIMITING FACTOR: _____

SIZE RATINGS USED FOR DESIGN PURPOSES
1. ☐ SMALL
2. ☐ MEDIUM
3. ☐ MEDIUM-LARGE
4. ☒ LARGE
5. ☐ EXTRA LARGE

DISPOSAL AREA TYPE/SIZE
1. ☐ BED _____ Sq. Ft.
2. ☒ CHAMBER 672 Sq. Ft.
☒ REGULAR ☐ H-20
3. ☐ TRENCH _____ Linear Ft.
4. ☐ OTHER: _____

DESIGN FLOW: 300 (GALLONS/DAY)

SITE EVALUATOR STATEMENT

On EDWARD (date) I conducted a site evaluation for this project and certify that the data reported is accurate. The system I propose is in accordance with the Subsurface Wastewater Disposal Rules.

COFFIN

Site Evaluator Signature
(Local Plumbing Inspector's Signature if permit is for Seasonal Conversion.)

PE #1638
SE#

August 31, 1989
Date

SUBSURFACE WASTEWATER DISPOSAL SYSTEM APPLICATION

Department of Human Services
Division of Health Engineering

Town, City, Plantation	Street, Road, Subdivision	Owners Name
AUGUSTA	WESTERN AVE	MILLETT, J.

SITE PLAN

Scale 1" = _____ Ft.

SEE SITE PLAN
AND DESIGN BY
COFFIN ENGINEERING

SITE LOCATION PLAN (Attach Map from Maine Atlas for New System Variance)

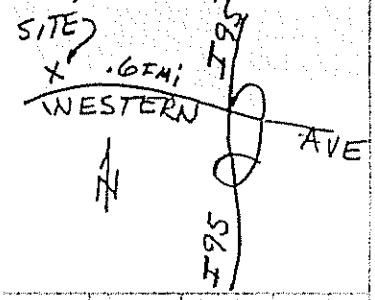

SOIL TEST PIT LOG
IN AREA OF DISPOSAL
FIELD FOR FLOOR
DRAINS

SOIL DESCRIPTION AND CLASSIFICATION (Location of Observation Holes Shown Above)

Observation Hole BULLDOZED ☑ Test Pit ☐ Boring
TP#3 0" Depth of Organic Horizon Above Mineral Soil

Depth below mineral soil surface (inches)	Texture	Consistency	Color	Mottling
0–6	FINE SANDY LOAM	FRIABLE	DK BROWN	
6–15			OLIVE BROWNE	
15–20				MOTTLING AT 15" to 18"
20–50	SANDY LOAM GLACIAL TILL W/ POCKETS OF SILT LOAM	FIRM	OLIVE	

Soil Profile	Classification Condition	Slope %	Limiting Factor	
1/3	C	14	15"	☑ Ground Water ☐ Restrictive Layer ☐ Bedrock

Observation Hole BULLDOZED ☑ Test Pit ☐ Boring
TP#4 0" Depth of Organic Horizon Above Mineral Soil

Depth below mineral soil surface (inches)	Texture	Consistency	Color	Mottling
0–6	V. FINE SANDY LOAM + SILT LOAM	FRIABLE	DK BROWN	
6–15			OLIVE BROWN	
15–20				MOTTLING @ 18"
20–50	SANDY LOAM G. TILL W/ POCKETS SILT LOAM	FIRM	OLIVE	

Soil Profile	Classification Condition	Slope %	Limiting Factor	
1/3	C	16	18"	☐ Ground Water ☐ Restrictive Layer ☐ Bedrock

Dennis P. Duggan — Site Evaluator Signature
55 — SE#
6/30/89 — Date

SUBSURFACE WASTEWATER DISPOSAL SYSTEM APPLICATION

Town, City, Plantation | Street, Road, Subdivision | Owners Name

Department of Human Services
Division of Health Engineering

SUBSURFACE WASTEWATER DISPOSAL PLAN

Scale 1" = 20 Ft.

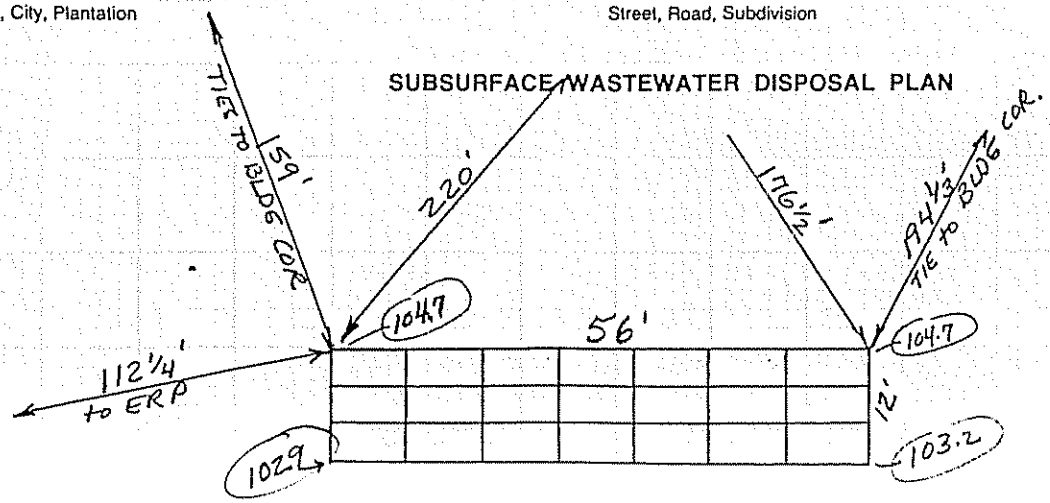

(300 gpd FROM COFFIN ENG.)

$\frac{300 \times 2.0}{32} = 18.75$

21 CHAMBERS

FILL REQUIREMENTS		CONSTRUCTION ELEVATIONS		ELEVATION REFERENCE POINT LOCATION & DESCRIPTION
Depth of Fill (Upslope)	"	Reference Elevation is		ERP(NAIL) = 100.0
Depth of Fill (Downslope)	"	Bottom of Disposal Area		NAIL IN 10" ASH TREE
		Top of Distribution Lines or Chambers		

DISPOSAL AREA CROSS SECTION

Scale:

Vertical: 1 inch = 5 Ft.

Horizontal: 1 inch = 10 Ft.

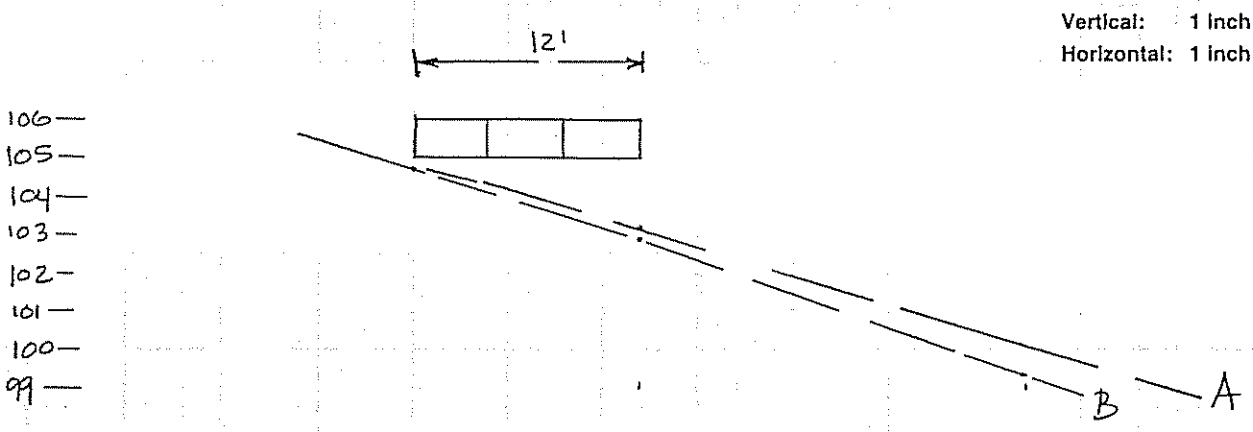

Site Evaluator Signature | SE# | Date

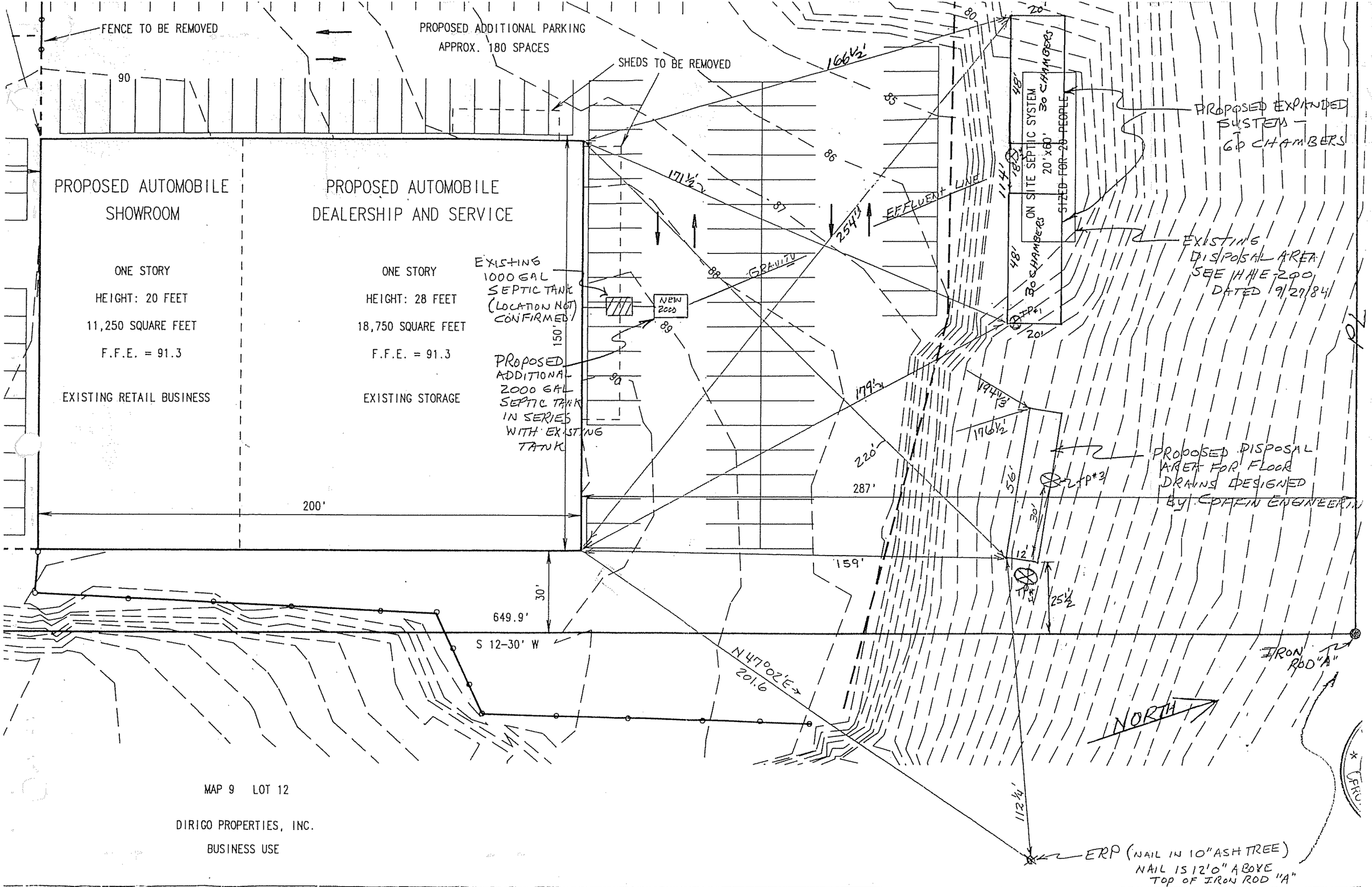

MAP 9 LOT 12

DIRIGO PROPERTIES, INC.

BUSINESS USE

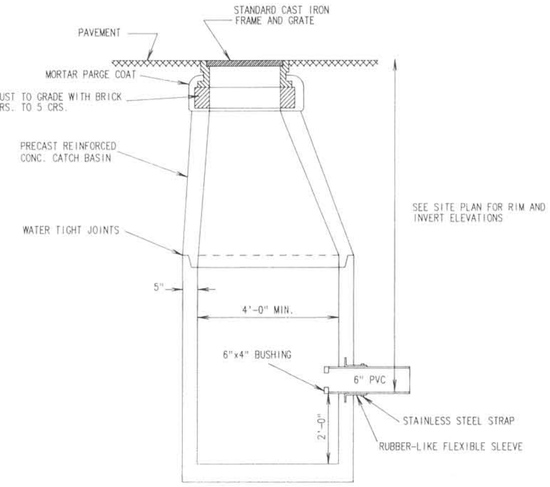

PRECAST CATCH BASIN

NO SCALE

NOTE: RIP-RAP SHALL WEIGH FROM 10 LBS. TO A MAXIMUM OF 200 LBS. APPROXIMATELY 50% OF THE STONES BY VOLUME SHALL EXCEED A UNIT WEIGHT OF 50 LBS.

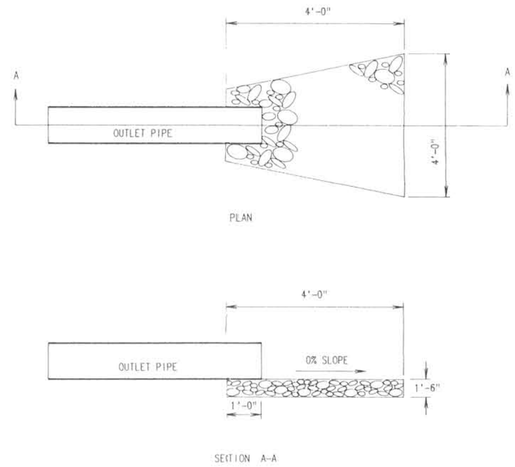

RIP-RAP APRON DETAIL

NO SCALE

NOTE: PLACE SIGNS ON ISLAND. "RIGHT TURN ONLY" FOR EXITING TRAFFIC AND "KEEP RIGHT" FOR ENTERING TRAFFIC.

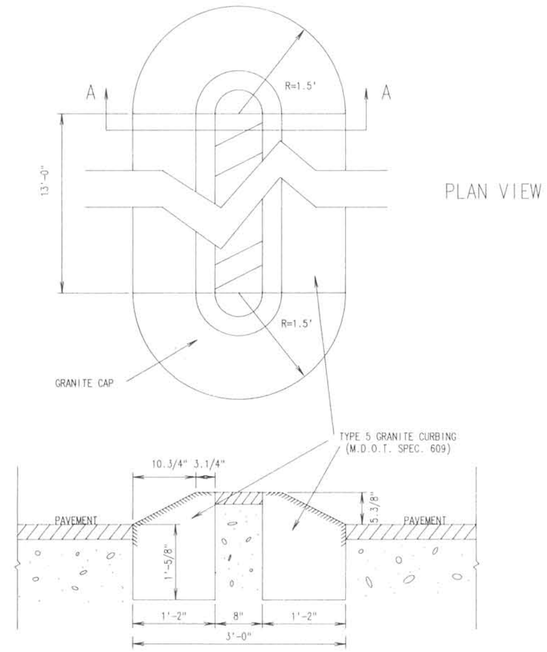

PLAN VIEW

SECTION A – A

TRAFFIC ISLAND DETAIL

NO SCALE

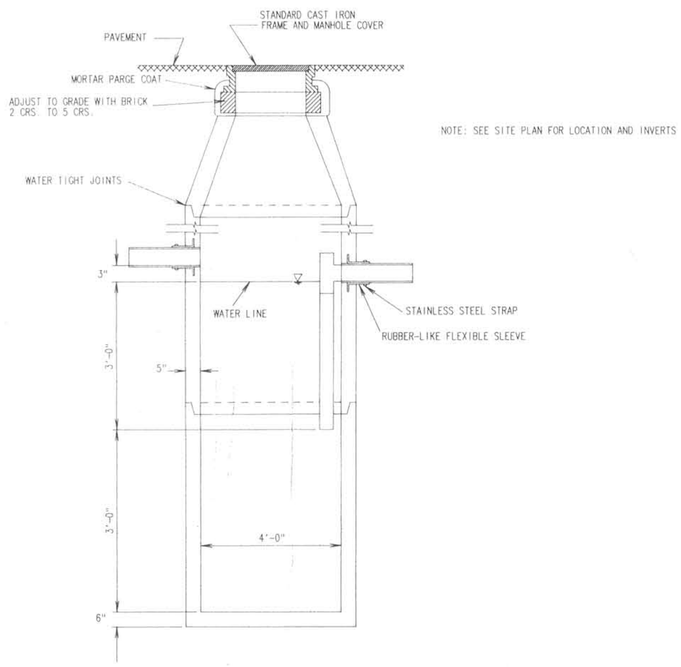

NOTE: SEE SITE PLAN FOR LOCATION AND INVERTS

SAND AND OIL TRAP

NO SCALE

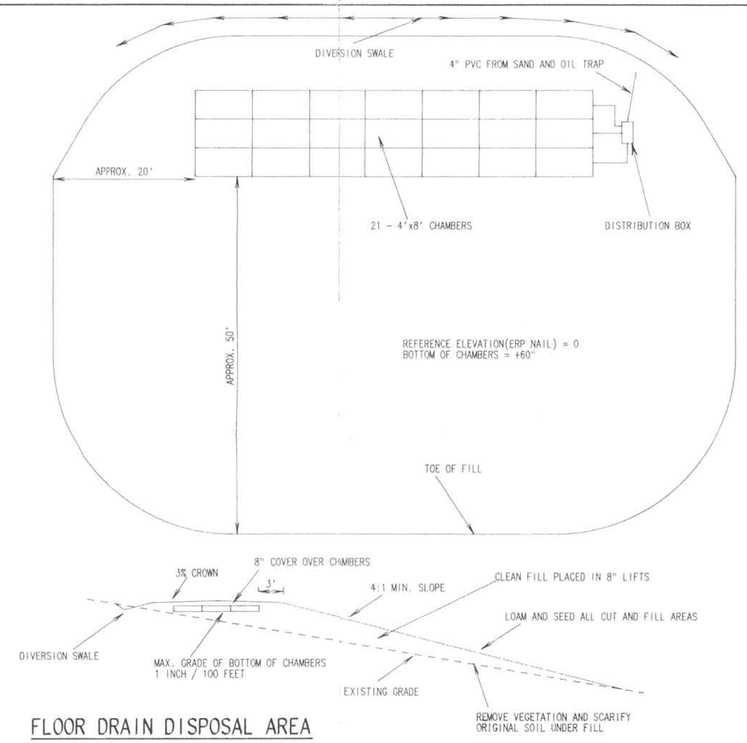

FLOOR DRAIN DISPOSAL AREA

NO SCALE

A 95% COMPACTION RATE SHALL BE MAINTAINED THROUGHOUT THE FILL AND GRAVEL LIFTS.

PARKING AREA SECTION

NO SCALE

STATE OF MAINE
EDWARD Sr COFFIN 1635
REGISTERED PROFESSIONAL ENGINEER

NO.	REVISIONS	DATE
A	DISPOSAL AREA	7/24/89

MISCELLANEOUS DETAILS FOR

AUGUSTA LUMBER COMPANY

WESTERN AVENUE
AUGUSTA, MAINE

BY: COFFIN ENGINEERING & SURVEYING
BOX 916 CONY ROAD AUGUSTA, MAINE
SHEET 1 OF 1 JULY 6, 1989

Permit # 1723