M8 / 53N

SUBSURFACE WASTEWATER DISPOSAL SYSTEM APPLICATION

Maine Dept.Health & Human Services
Div of Environmental Health , 11 SHS
72

AUGUSTA PERMIT #6918 TOWN COPY
Date Permit Issued: 2/30/12 $ 250.00 fee
15.00
LPI # 850

PROPERTY LOCATION

City, Town, or Plantation	AUGUSTA
Street or Road	61 GERABRO AVE. ACCS
Subdivision, Lot #	GERABRO AC. LOT # 11

OWNER/APPLICANT INFORMATION

Name (last, first, MI)	RODRIGUE, PAUL ☑ Owner ☑ Applicant
Mailing Address of Owner/Applicant	58 RODRIGUE HIGHTS AUGUSTA, ME, 04330
Daytime Tel. #	

Municipal Tax Map # _____ Lot # _____

OWNER OR APPLICANT STATEMENT
I state and acknowledge that the information submitted is correct to the best of my knowledge and understand that any falsification is reason for the Department and/or Local Plumbing Inspector to deny a Permit.

Signature of Owner or Applicant _____ Date _____

CAUTION: INSPECTION REQUIRED
I have inspected the installation authorized above and found it to be in compliance with the Subsurface Wastewater Disposal Rules Application. _____ (1st) date approved

Local Plumbing Inspector Signature _____ (2nd) date approved _____

PERMIT INFORMATION

TYPE OF APPLICATION
- ☑ 1. First Time System
- ☐ 2. Replacement System
  - Type replaced: _____
  - Year installed: _____
- ☐ 3. Expanded System
  - ☐ a. <25% Expansion
  - ☐ b. >25% Expansion
- ☐ 4. Experimental System
- ☐ 5. Seasonal Conversion

THIS APPLICATION REQUIRES
- ☑ 1. No Rule Variance
- ☐ 2. First Time System Variance
  - ☐ a. Local Plumbing Inspector Approval
  - ☐ b. State & Local Plumbing Inspector Approval
- ☐ 3. Replacement System Variance
  - ☐ a. Local Plumbing Inspector Approval
  - ☐ b. State & Local Plumbing Inspector Approval
- ☐ 4. Minimum Lot Size Variance
- ☐ 5. Seasonal Conversion Permit

DISPOSAL SYSTEM COMPONENTS
- ☑ 1. Complete Non-engineered System
- ☐ 2. Primitive System (graywater & alt. toilet)
- ☐ 3. Alternative Toilet, specify: _____
- ☐ 4. Non-engineered Treatment Tank (only)
- ☐ 5. Holding Tank, _____ gallons
- ☐ 6. Non-engineered Disposal Field (only)
- ☐ 7. Separated Laundry System
- ☐ 8. Complete Engineered System (2000 gpd or more)
- ☐ 9. Engineered Treatment Tank (only)
- ☐ 10. Engineered Disposal Field (only)
- ☐ 11. Pre-treatment, specify: _____
- ☐ 12. Miscellaneous Components

SIZE OF PROPERTY
3± ☐ SQ. FT. ☑ ACRES

SHORELAND ZONING
☐ Yes ☑ No

DISPOSAL SYSTEM TO SERVE
- ☐ 1. Single Family Dwelling Unit, No. of Bedrooms: _____
- ☑ 2. Multiple Family Dwelling, No. of Units: 2 (4 BED)
- ☐ 3. Other: _____ (specify)

Current Use ☐ Seasonal ☑ Year Round ☐ Undeveloped

TYPE OF WATER SUPPLY
☑ 1. Drilled Well ☐ 2. Dug Well ☐ 3. Private
☐ 4. Public ☐ 5. Other

DESIGN DETAILS (SYSTEM LAYOUT SHOWN ON PAGE 3)

TREATMENT TANK
- ☑ 1. Concrete
  - ☑ a. Regular
  - ☐ b. Low Profile
- ☐ 2. Plastic
- ☐ 3. Other: _____

CAPACITY: 1,000 GAL.

DISPOSAL FIELD TYPE & SIZE
- ☑ 1. Stone Bed ☐ 2. Stone Trench
- ☐ 3. Proprietary Device
  - ☐ a. cluster array ☐ c. Linear
  - ☐ b. regular load ☐ d. H-20 load
- ☐ 4. Other: _____

SIZE: 1,200 ☑ sq. ft. ☐ lin. ft.

GARBAGE DISPOSAL UNIT
☑ 1. No ☐ 2. Yes ☐ 3. Maybe
If Yes or Maybe, specify one below:
- ☐ a. multi-compartment tank
- ☐ b. ___ tanks in series
- ☐ c. Increase in tank capacity
- ☐ d. Filter on Tank Outlet

DESIGN FLOW
360 gallons per day
BASED ON:
- ☑ 1. Table 4A (dwelling unit(s))
- ☐ 2. Table 4C(other facilities)
  SHOW CALCULATIONS for other facilites
- ☐ 3. Section 4G (meter readings)
  ATTACH WATER METER DATA

SOIL DATA & DESIGN CLASS
PROFILE CONDITION
3 C
a.Observation Hole # 1
Depth 20"
of Most Limiting Soil Factor

DISPOSAL FIELD SIZING
- ☐ 1. Medium---2.6 sq. ft. / gpd
- ☑ 2. Medium- -Large 3.3 sq. f.t / gpd
- ☐ 3. Large---4.1 sq. ft. / gpd
- ☐ 4. Extra Large---5.0 sq. ft. / gpd

EFFLUENT/EJECTOR PUMP
- ☑ 1. Not Required
- ☐ 2. May Be Required
- ☐ 3. Required

Specify only for engineered systems:
DOSE: _____ gallons

LATITUDE AND LONGITUDE
at center of disposal area
Lat. 44 d 19 m 923 s
Lon. 69 d 40 m 668 s
If g.p.s, state margin of error: 12

SITE EVALUATOR STATEMENT

I certify that on 9/27/12 (date) I completed a site evaluation on this property and state that the data reported are accurate and that the proposed system is in compliance with the State of Maine Subsurface Wastewater Disposal Rules (10-144A CMR 241).

Site Evaluator Signature _____ SE # 256 Date 9/29/12

JOHN PHILBRICK
Site Evaluator Name Printed _____ Telephone Number 547-3732 E-mail Address _____

Note : Changes to or deviations from the design should be confirmed with the Site Evaluator.

SUBSURFACE WASTEWATER DISPOSAL SYSTEM APPLICATION

Department of Health & Human Services
Division of Environmental Health
(207) 287-5672 Fax: (207) 287-3165

Town, City, Plantation	Street, Road, Subdivision	Owner's Name
AUGUSTA	GERABRO AC. LOT # 11	PAUL RODRIGUE

SITE PLAN

Scale 1" = 50 ft. or as shown

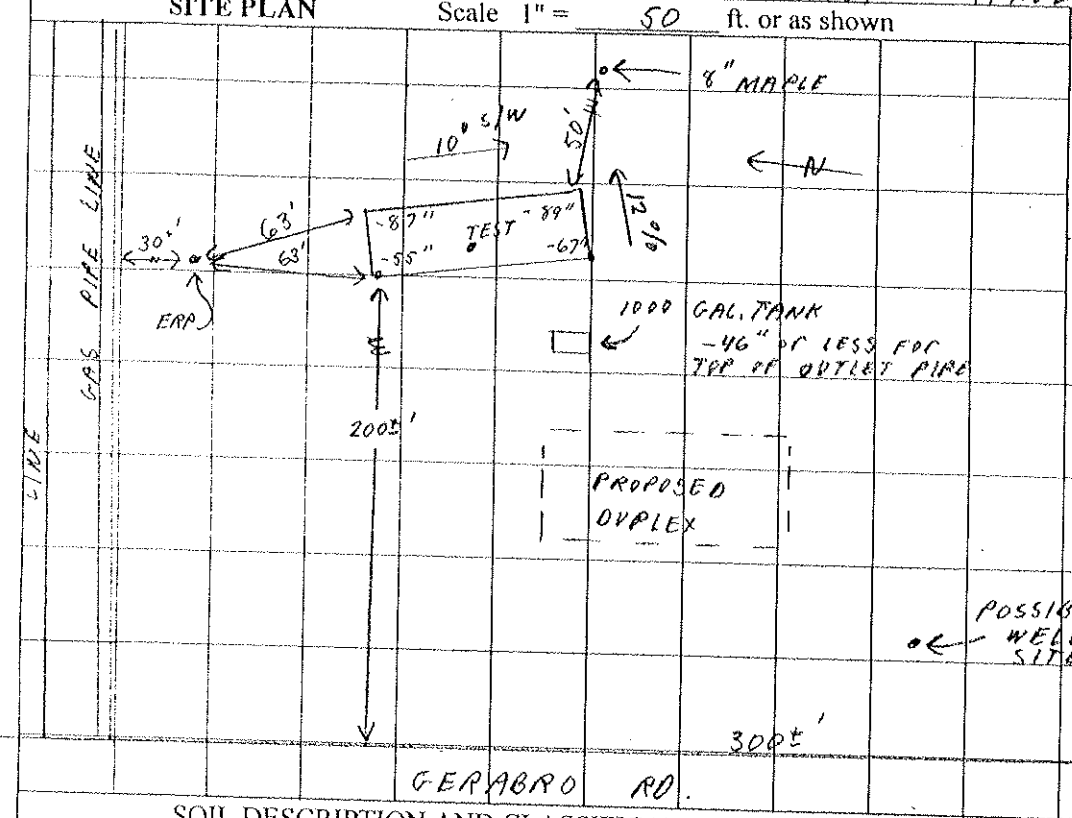

SITE LOCATION PLAN
(map from Maine Atlas recommended)

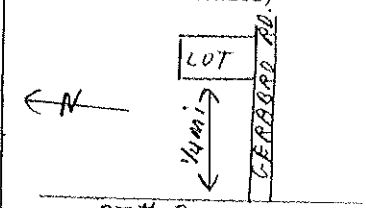

SOIL DESCRIPTION AND CLASSIFICATION (Location of Observation Holes Shown Above)

Observation Hole 1 ☑ Test Pit ☐ Boring

2± " Depth of Organic Horizon Above Mineral Soil

Depth Below Mineral Soil Surface (inches)	Texture	Consistency	Color	Mottling
0	SANDY LOAM	FRIABLE	D. BR.	NONE
10	STONEY LOAMY SAND	↓	ORANGE BR. / YELLOW BR.	↓
20	FINE LOAMY SAND	FIRM	GRAY	COMMON DISTINCT
30	↓	↓	↓	↓
40				
50				

Soil Classification	Slope	Limiting Factor	
3 Profile / C Condition	12 %	20"	[✓] Ground Water [✓] Restrictive Layer [ ] Bedrock [ ] Pit Depth

Observation Hole _____ ☐ Test Pit ☐ Boring

_____ " Depth of Organic Horizon Above Mineral Soil

Depth Below Mineral Soil Surface (inches)	Texture	Consistency	Color	Mottling
0				
10				
20				
30				
40				
50				

Soil Classification	Slope	Limiting Factor	
Profile / Condition	%	"	[ ] Ground Water [ ] Restrictive Layer [ ] Bedrock [ ] Pit Depth

Site Evaluator Signature _____ SE # 256 Date 9/29/12

SUBSURFACE WASTEWATER DISPOSAL SYSTEM APPLICATION

05067453

Town, City, Plantation: AUGUSTA

Street, Road, Subdivision: GERABRO AC. LOT # 11

Owner's Name: PAUL RODRIGUE

SUBSURFACE WASTEWATER DISPOSAL PLAN

Scale: 1" = 20 ft. or as shown

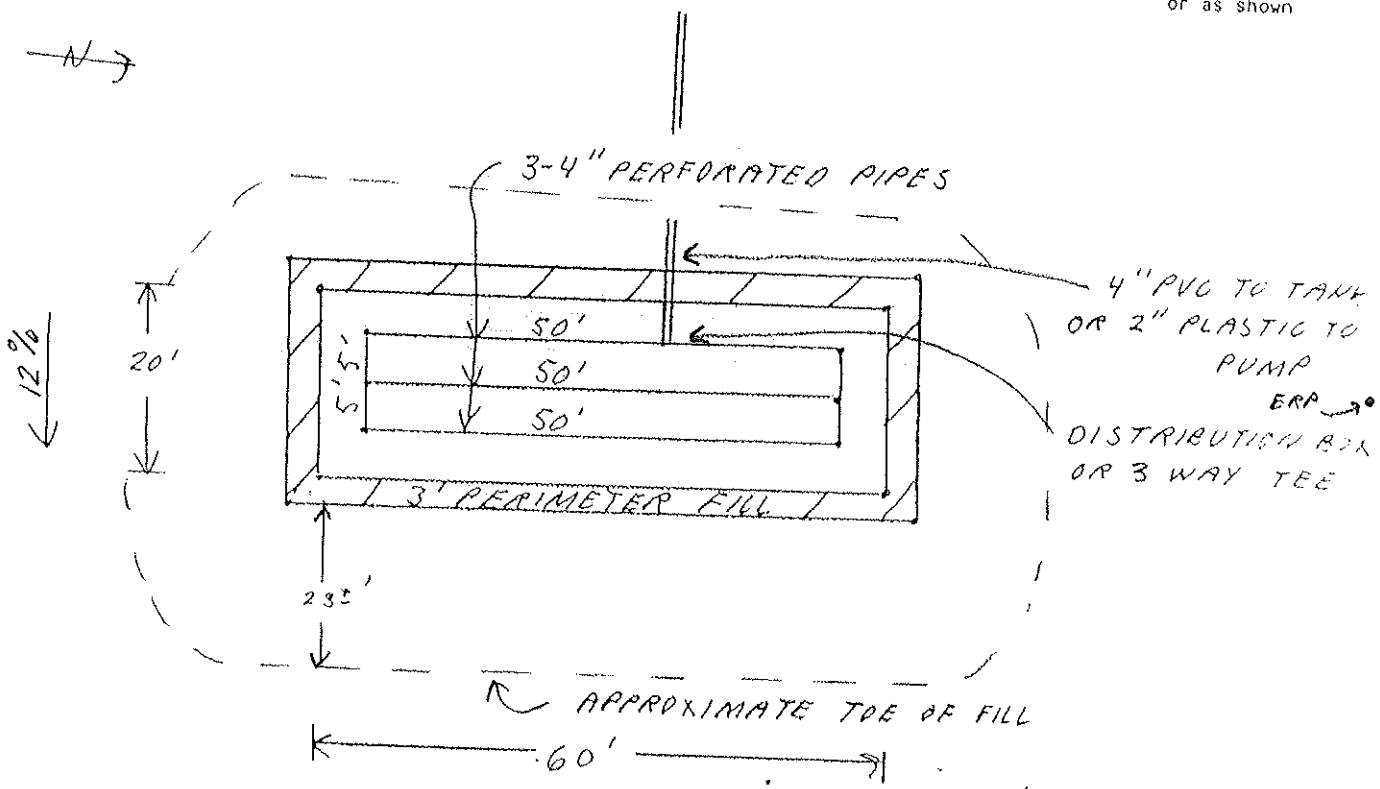

20'x60' BED
FLAGS MARK CORNERS

FILL REQUIREMENTS
Depth of Fill (Upslope)
Depth of Fill (Downslope)

CONSTRUCTION ELEVATION
16" Reference Elevation is
50" Bottom of Disposal Area
Top of Distribution Lines or Chambers

ELEVATION REFERENCE POINT
0"
-60" ERP IS IN 3" MAPLE, 63' NORTH OF SYSTEM, 67" ABOVE GROUND
-49"

DISPOSAL AREA CROSS SECTION

Scale:
Vertical: 1 inch = 5 ft.
Horizontal: 1 inch = 10 ft.

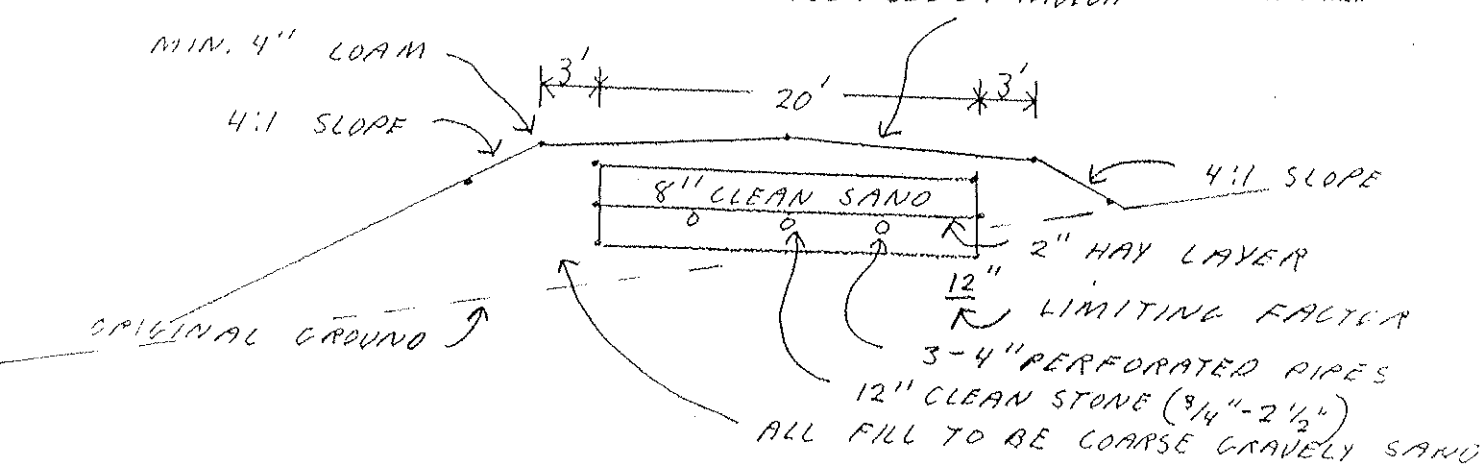

Site Evaluator Signature

256
SE#

9/29/12
Date

Approved for use as HHE 200 by Division of Health Engineering 9/87