M8 L29

SUBSURFACE WASTEWATER DISPOSAL SYSTEM APPLICATION

Department of Human Services
Division of Health Engineering
(207) 287-5672 FAX (207) 287-4172

AUGUSTA 3471 TOWN COPY

Date Permit Issued: 6/23/96 $ 60.00 FEE ☐ If Double Fee Charged

Local Plumbing Inspector Signature: Mary R. Miller L.P.I. # 850

PROPERTY LOCATION

Town or Plantation: AUGUSTA

Street Subdivision Lot #: Rt 105 So. Belfast Ave

PROPERTY OWNERS NAME

Last: TRASK First: JEFFERY

Mailing Address of Owner: RR7 Box 265 AUGUSTA ME 04330

Daytime Tel. #: 622-0807

Municipal Tax Map # 8 LOT ~~Page #~~ 29F

Owner Statement

state that the information submitted is correct to the best of my knowledge and understand that any falsification is reason for the Department and/or Local Plumbing Inspector to deny a Permit

Jeff Trask — Signature of Owner/Applicant — Date 5/18/96

Caution: Inspection Required

I have inspected the installation authorized above and found it to be in compliance with the Subsurface Wastewater Disposal Rules Application.

Mary R. Miller — Local Plumbing Inspector Signature — Date Approved 8/12/96

PERMIT INFORMATION

THIS APPLICATION IS FOR:
1. ☒ First Time System
2. ☐ Multi-User System
3. ☐ Replacement System
4. ☐ Expanded System
   a. ☐ One-time exempted
   b. ☐ Non-exempted
5. ☐ Experimental System
6. ☐ Seasonal Conversion

THIS APPLICATION REQUIRES:
1. ☒ No Rule Variance
2. ☐ First Time System Variance (Municipal)
3. ☐ First Time System Variance (State)
4. ☐ Replacement System Variance
   a. ☐ Local Plumbing Inspector approval
   b. ☐ State & Local Plumbing Inspector approval
5. ☐ Minimum Lot Size Variance
6. ☐ Seasonal Conversion Variance

DISPOSAL SYSTEM COMPONENT(S)
1. ☒ Non-Engineered System
2. ☐ Primitive System
3. ☐ Alternative Toilet
   Specify _____
4. ☐ Non-Engineered Treatment Tank
5. ☐ Holding Tank _____ Gallons
6. ☐ Non-Engineered Disposal Area (only)
7. ☐ Separated Laundry System
8. ☐ Engineered System (+2000 gpd)
9. ☐ Engineered Treatment Tank (only)
10. ☐ Engineered Disposal Area (only)

SIZE OF PROPERTY: 3.9 ± AC

SHORELAND ZONING: ☐ Yes ☒ No

DISPOSAL SYSTEM TO SERVE:
1. ☒ Single Family Dwelling Unit
2. ☐ Multiple Family Dwelling Unit
   Number of Units _____
3. ☐ Other _____ SPECIFY

TYPE OF WATER SUPPLY: PROPOSED DRILLED WELL

DESIGN DETAILS (SYSTEM LAYOUT SHOWN ON PAGE 3)

TREATMENT TANK
1. ☒ Concrete
   ☐ Regular
   ☐ Low Profile
2. ☐ Plastic

SIZE 1000 Gallons
W ZABEL A-1800

DISPOSAL AREA TYPE/SIZE
1. ☒ Stone Bed 900 Sq.Ft.
2. ☐ Proprietary Device _____ Sq.Ft.
   ☐ Clustered ☐ Linear
   ☐ Regular ☐ H-20
3. ☐ Trench _____ Lin. Ft.
4. ☐ Other _____

GARBAGE DISPOSAL UNIT
1. ☒ No
2. ☐ Yes
   ☐ Multi-compartment tank
   ☐ Tank in series
   ☐ Increase in tank capacity
   ☐ Filter on tank outlet

CRITERIA USED FOR DESIGN FLOW (Show Calculations)

2 BEDROOMS
180 / 5' = 900 sq ft
20' x 45' BED

DESIGN FLOW: 180 (Gallons/Day)

PROFILE & DESIGN CLASS

PROFILE 9 | DESIGN D

DEPTH TO MOST LIMITING FACTOR 12"

DISPOSAL AREA SIZING
1. ☐ Small 2.0
2. ☐ Medium 2.60
3. ☐ Medium-Large 3.30
4. ☐ Large 4.10
5. ☒ Extra-Large 5.00

PUMPING
1. ☐ Not Required
2. ☒ May Be Required
3. ☐ Required

DOSE _____ Gallons

SITE EVALUATOR'S STATEMENT

On 5, 18, 96 (date) I completed a site evaluation on this property and state that the data reported is accurate and that the proposed system is in compliance with the Subsurface Wastewater Disposal Rules.

David L Studer — Site Evaluator Signature
DAVID L STUDER — Print Name
275 — SE #
845-2352 — Telephone
5-18-96 — Date

SUBSURFACE WASTEWATER DISPOSAL SYSTEM APPLICATION

Town, City or Plantation: AUGUSTA

Street, Road or Subdivision: RE 105

Name of Owner: JEFFERY TRASK

SITE PLAN

Scale: 1" = 100 Ft. or as shown

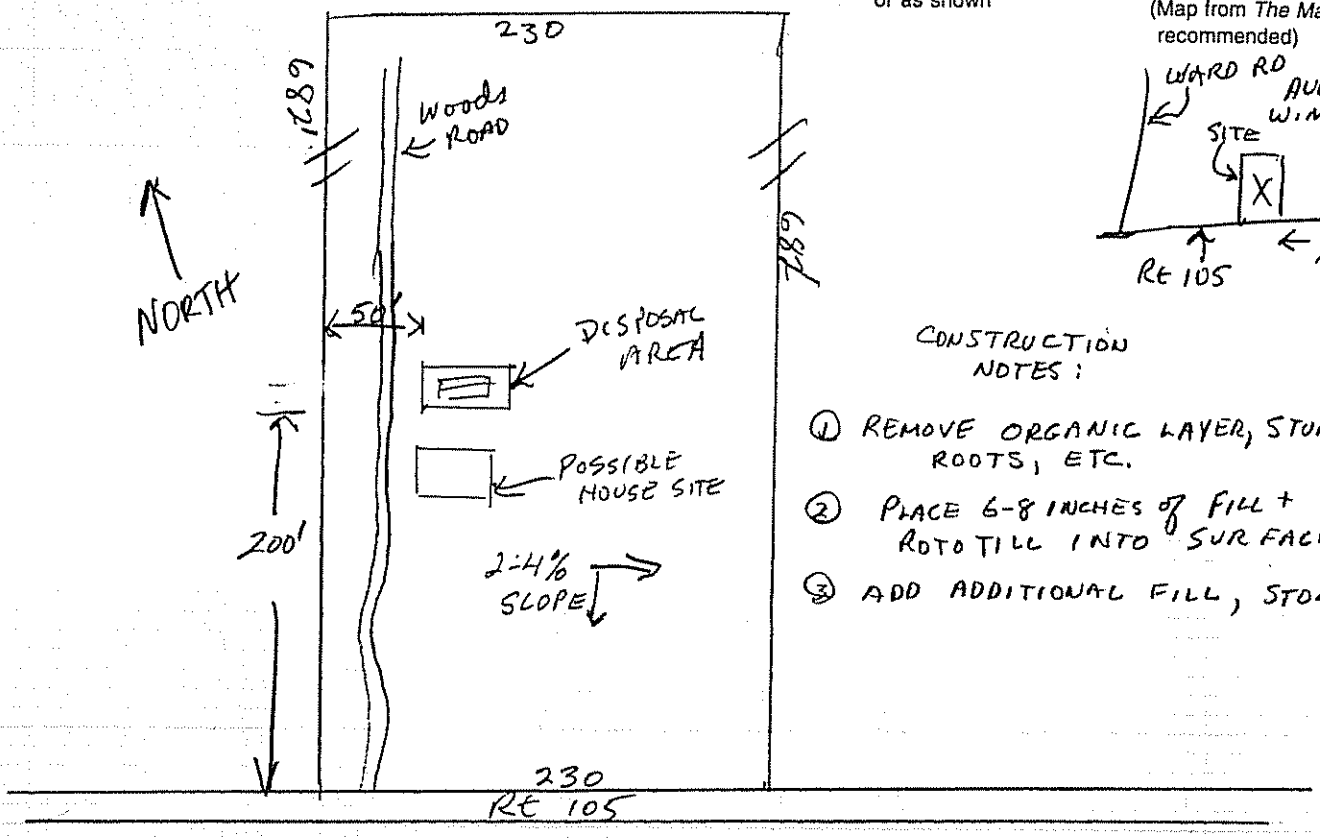

SITE LOCATION PLAN

(Map from *The Maine Atlas* recommended)

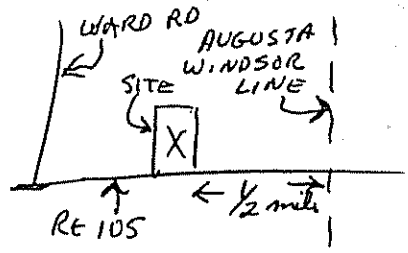

CONSTRUCTION NOTES:

1. REMOVE ORGANIC LAYER, STUMPS ROOTS, ETC.
2. PLACE 6-8 INCHES OF FILL + ROTOTILL INTO SURFACE
3. ADD ADDITIONAL FILL, STONE, ETC.

SOIL DESCRIPTION AND CLASSIFICATION

(Location of Observation Holes Shown Above)

Observation Hole TP-1 ☒ Test Pit ☐ Boring

_____" Depth of Organic Horizon Above Mineral Soil

Depth below mineral soil surface (inches)	Texture	Consistency	Color	Mottling
0–6	LOAM	FRIABLE	DK BROWN YELLOW BROWN	
6–10				
10–15	SILT LOAM	FIRM	GRAY	COMMON DISTINCT (FREE WATER)
15–20				
20–30				
30–40				
40–50				

Soil Profile	Class	Slope	Limiting Factor	
9	D	2-4 %	12.	☒ Ground Water ☒ Restrictive Layer ☐ Bedrock

Observation Hole TP-2 ☒ Test Pit ☐ Boring

_____" Depth of Organic Horizon Above Mineral Soil

Depth below mineral soil surface (inches)	Texture	Consistency	Color	Mottling
0–6	LOAM		DK BROWN YELLOW BN	
6–10				
10–15	SILT LOAM	FIRM	GRAY	COMMON DISTINCT
15–20				
20–30				
30–40				
40–50				

Soil Profile	Class	Slope	Limiting Factor	
9	D	2-4 %	13.	☒ Ground Water ☒ Restrictive Layer ☐ Bedrock

David J Studer
Site Evaluator Signature

275
SE #

5-18-96
Date

SUBSURFACE WASTEWATER DISPOSAL SYSTEM APPLICATION

Town, City or Plantation: AUGUSTA

Street, Road or Subdivision: Rt 105

Name of Owner: JEFFERY TRASK

SUBSURFACE WASTEWATER DISPOSAL PLAN

Scale: 1" = 20 Ft.

ED = 29'
EC = 21'
EB = 67'

TB = 56'
TE = 51.6'
TC = 43'
TD = 62'

ORIGINAL ELEVATIONS
A = 32" C = 44"
B = 30" D = 45"

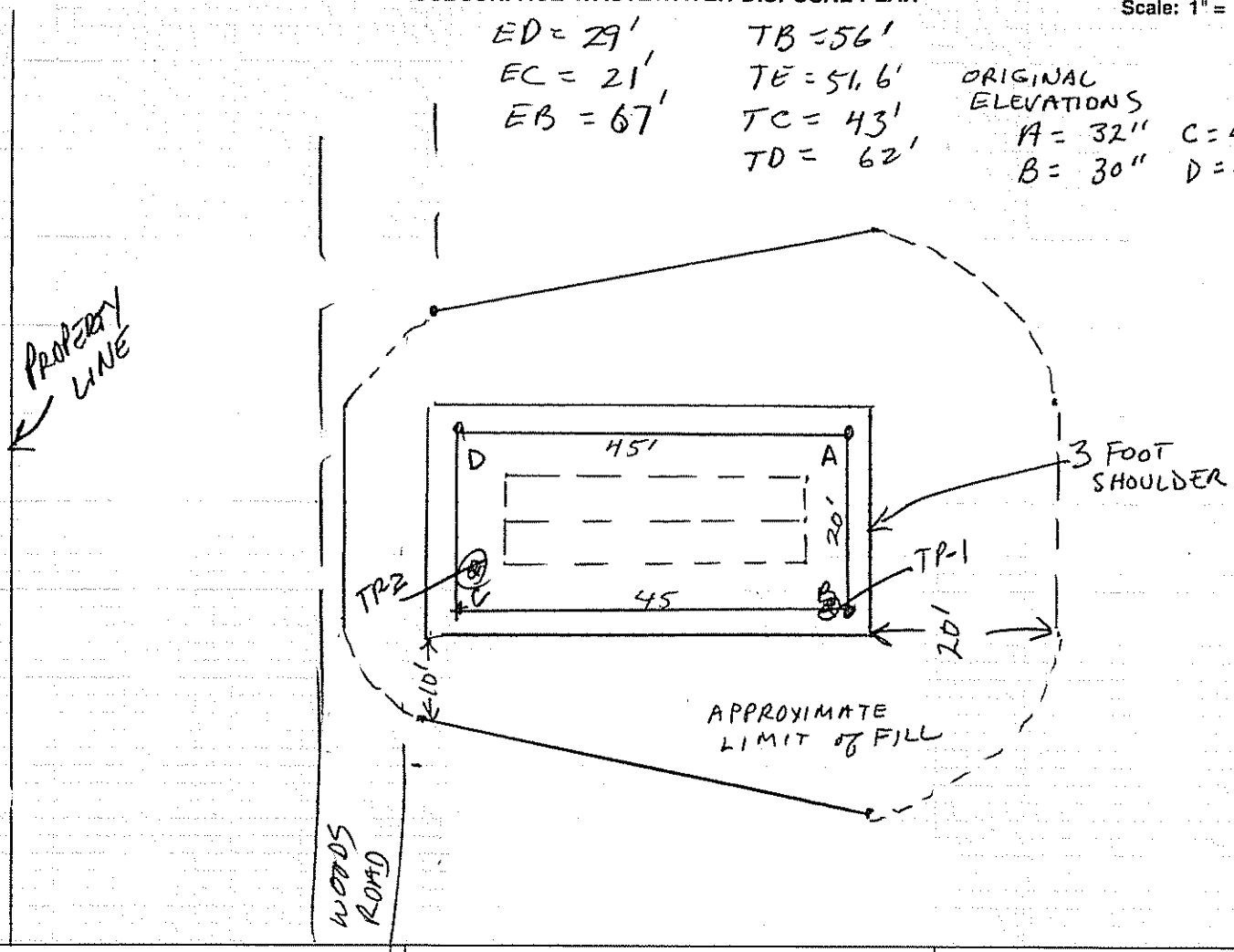

FILL REQUIREMENTS	CONSTRUCTION ELEVATIONS	ELEVATION REFERENCE POINT
Depth of Fill (Upslope) 30"	Finished Grade Elevation 10-12" ABOVE PIPE	Location & Description NAIL IN TREE ABOUT 5' ABOVE GRADE
Depth of Fill (Downslope) 42"	Top of Distribution Pipe or Proprietary Device -13	Reference & Elevation "0"
	Bottom of Disposal Area -24	

DISPOSAL AREA CROSS SECTION

SCALE V: 5' = 1"
H: 20' = 1"

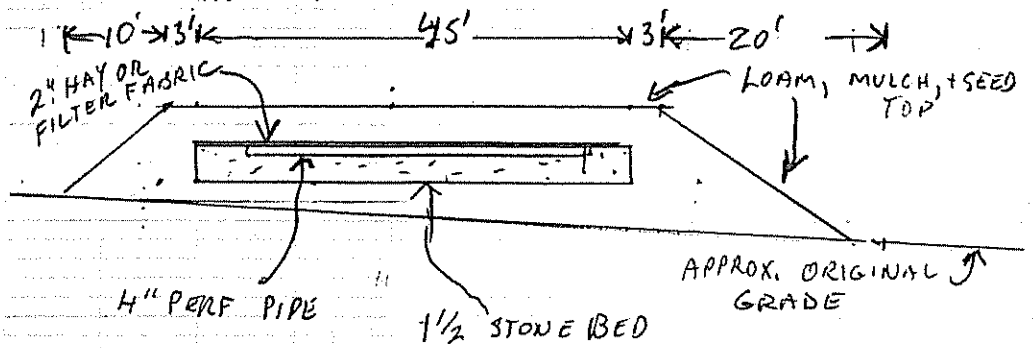

Scale:
Vertical: 1" = 5 Ft.
~~Scale:~~ H: 1" = 20 Ft.

THRU AB

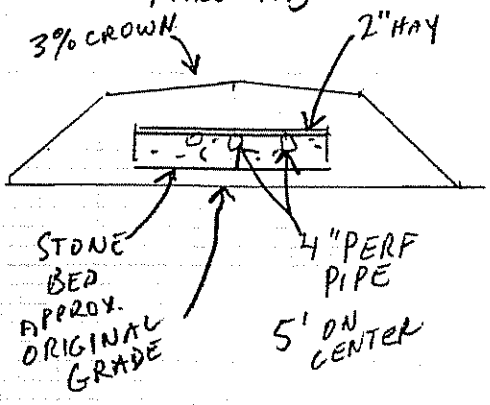

David Studer
Site Evaluator Signature

275
SE #

5-18-96
Date