M8L12

SUBSURFACE WASTEWATER DISPOSAL SYSTEM APPLICATION

09303338

PROPERTY ADDRESS

Town Or Plantation: AUGUSTA

Street Address Or Subdivision Lot #: 223 WEEKS MILLS RD.

PROPERTY OWNER'S NAME

Last: CYR First: CHRISTIAN

Applicant Name: SAME

Mailing Address of Owner/Applicant (If Different): P.O. BOX 4636 AUGUSTA, ME. 04330

CAUTION: PERMIT REQUIRED

AUGUSTA 2835 TOWN COPY

Date Permit Issued: 10/12/93 $ 100.00 FEE ☐ If Double Fee Charged

Local Plumbing Inspector Signature L.P.I. # 008

OWNER/APPLICANT STATEMENT

I certify that the information submitted is correct to the best of my knowledge and understand that any falsification is reason for the Local Plumbing Inspector to deny a Permit.

Bradford McClement 10/12/93

Signature of Owner/Applicant Date

CAUTION: INSPECTION REQUIRED

I have inspected the installation authorized above and found it to be in compliance with the Subsurface Wastewater Disposal Rules.

Mark R. Fuller 11/8/93

Local Plumbing Inspector Signature Date Approved

PERMIT INFORMATION

THIS APPLICATION IS FOR:

1. ☑ NEW SYSTEM
2. ☐ REPLACEMENT SYSTEM
3. ☐ EXPANDED SYSTEM
4. ☐ EXPERIMENTAL SYSTEM

SEASONAL CONVERSION

to be completed by the LPI

5. ☐ SYSTEM COMPLIES WITH RULES
6. ☐ CONNECTED TO SANITARY SEWER
7. ☐ SYSTEM INSTALLED - P# _____
8. ☐ SYSTEM DESIGN RECORDED AND ATTACHED

IF REPLACEMENT SYSTEM:

YEAR FAILING SYSTEM INSTALLED _____

THE FAILING SYSTEM IS

1. ☐ BED 3. ☐ TRENCH
2. ☐ CHAMBER 4. ☐ OTHER _____

SIZE OF PROPERTY: 40± AC. ZONING: RURAL

THIS APPLICATION REQUIRES:

1. ☑ NO RULE VARIANCE
2. ☐ NEW SYSTEM VARIANCE Attach New System Variance Form
3. ☐ REPLACEMENT SYSTEM VARIANCE Attach Replacement System Variance Form
   a. ☐ Requires Local Plumbing Inspector Approval
   b. ☐ Requires State and Local Plumbing Inspector Approval
4. ☐ MINIMUM LOT SIZE VARIANCE

DISPOSAL SYSTEM TO SERVE:

1. ☐ SINGLE FAMILY DWELLING
2. ☑ MODULAR OR MOBILE HOME
3. ☐ MULTIPLE FAMILY DWELLING
4. ☐ OTHER _____ SPECIFY

INSTALLATION IS:

COMPLETE SYSTEM

1. ☑ NON-ENGINEERED SYSTEM
2. ☐ PRIMITIVE SYSTEM (Includes Alternative Toilet)
3. ☐ ENGINEERED (+ 2000 gpd)

INDIVIDUALLY INSTALLED COMPONENTS

4. ☐ TREATMENT TANK (ONLY)
5. ☐ HOLDING TANK _____ GAL.
6. ☐ ALTERNATIVE TOILET (ONLY)
7. ☐ NON-ENGINEERED DISPOSAL AREA (ONLY)
8. ☐ ENGINEERED DISPOSAL AREA (ONLY)
9. ☐ SEPARATED LAUNDRY SYSTEM

TYPE OF WATER SUPPLY

PRIVATE

DESIGN DETAILS (SYSTEM LAYOUT SHOWN ON PAGE 3)

TREATMENT TANK

1. ☑ SEPTIC: ☑ Regular ☐ Low Profile
2. ☐ AEROBIC

SIZE 1000 GALS.

WATER CONSERVATION

1. ☑ NONE
2. ☐ LOW VOLUME TOILET
3. ☐ SEPARATED LAUNDRY SYSTEM
4. ☐ ALTERNATIVE TOILET SPECIFY _____

PUMPING

1. ☑ NOT REQUIRED
2. ☐ MAY BE REQUIRED (DEPENDING ON TREATMENT TANK LOCATION & ELEVATION)
3. ☐ REQUIRED

DOSE: _____ GALS.

CRITERIA USED FOR DESIGN FLOW (BEDROOMS, SEATING) EMPLOYEES, WATER RECORDS, ETC.)

2 BEDROOM

SOIL CONDITIONS USED FOR DESIGN PURPOSES

PROFILE	CONDITION
3	C

DEPTH TO LIMITING FACTOR: 20"

SIZE RATINGS USED FOR DESIGN PURPOSES

1. ☐ SMALL
2. ☐ MEDIUM
3. ☑ MEDIUM-LARGE
4. ☐ LARGE
5. ☐ EXTRA-LARGE

DISPOSAL AREA TYPE/SIZE

1. ☑ BED 600 Sq. Ft.
2. ☐ CHAMBER _____ Sq. Ft. ☐ REGULAR ☐ H-20
3. ☐ TRENCH _____ Linear Ft.
4. ☐ OTHER: _____

DESIGN FLOW: 180 G.P.D. (GALLONS/DAY)

SITE EVALUATOR STATEMENT

On 10/1/93 (date) I conducted a site evaluation for this project and certify that the data reported is accurate. The system I propose is in accordance with the Subsurface Wastewater Disposal Rules.

John A. Philbrick, Licensed Site Evaluator

256 SE#

10/4/93 Date

Approved for use as HHE 200 by Division of Health Engineering 9/87

SUBSURFACE WASTEWATER DISPOSAL SYSTEM APPLICATION

09303338

Town, City, Plantation	Street, Road, Subdivision	Owner's Name
AUGUSTA	WEEKS MILLS RD.	CHRISTAN CYR

SITE PLAN

Scale: 1" = 50 Ft. or as shown

SITE LOCATION PLAN
(Attach Map from Maine Atlas for New System Variance)

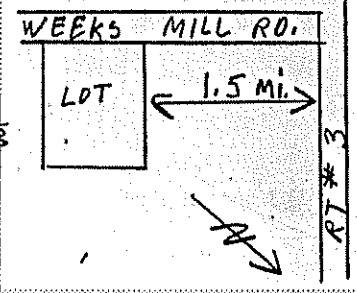

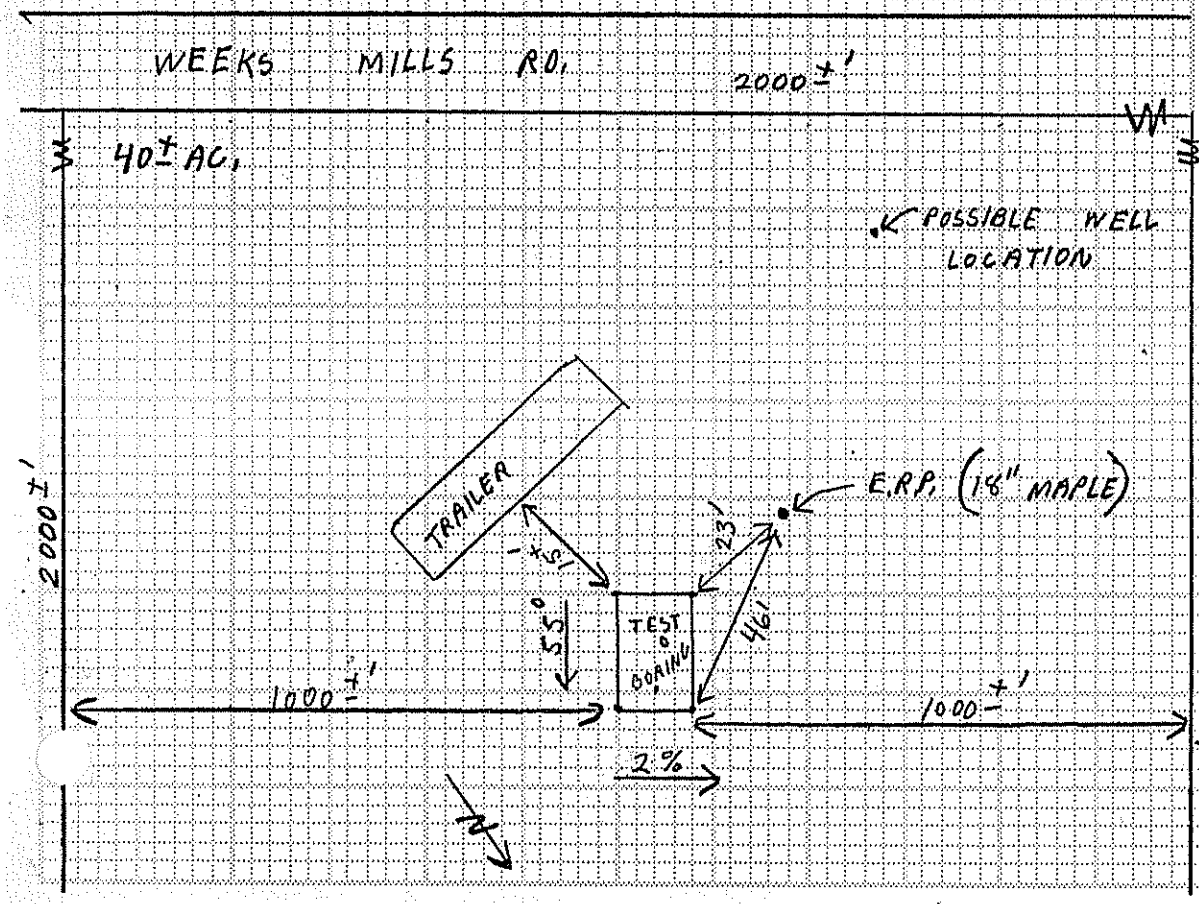

SOIL DESCRIPTION AND CLASSIFICATION

(Location of Observation Holes Shown Above)

Observation Hole 1 ☑ Test Pit ☐ Boring

2-+" Depth of Organic Horizon Above Mineral Soil

Inches	Texture	Consistency	Color	Mottling
0–6	SANDY LOAM	FRIABLY	DARK BR.	NONE
6–10	LOAMY		REDISH BR.	
10–15			YELLOW	
15–20	SAND		BR.	
20–30		FIRM	GRAY	COMMON DISTINCT

Depth Below Mineral Surface

Soil Profile	Classification Condition	Slope	Limiting Factor	
3	C	2 %	20	☑ Ground Water ☐ Restr. Layer ☐ Bedrock

Observation Hole 2 ☐ Test Pit ☑ Boring

_____" Depth of Organic Horizon Above Mineral Soil

Inches	Texture	Consistency	Color	Mottling
0–20		SAME	AS #1	

Depth Below Mineral Surface

Soil Profile	Classification Condition	Slope	Limiting Factor	
		%		☐ Ground Water ☐ Restr. Layer ☐ Bedrock

Site Evaluator Signature

256
SE#

10/4/93
Date

Approved for use as HHE 200 by Division of Health Engineering 9/87

SUBSURFACE WASTEWATER DISPOSAL SYSTEM APPLICATION

09303338

Town, City, Plantation	Street, Road, Subdivision	Owner's Name
AUGUSTA	WEEK MILLS RD.	CHRISTAN CYR

SUBSURFACE WASTEWATER DISPOSAL PLAN

Scale: 1" = 20 Ft. or as shown

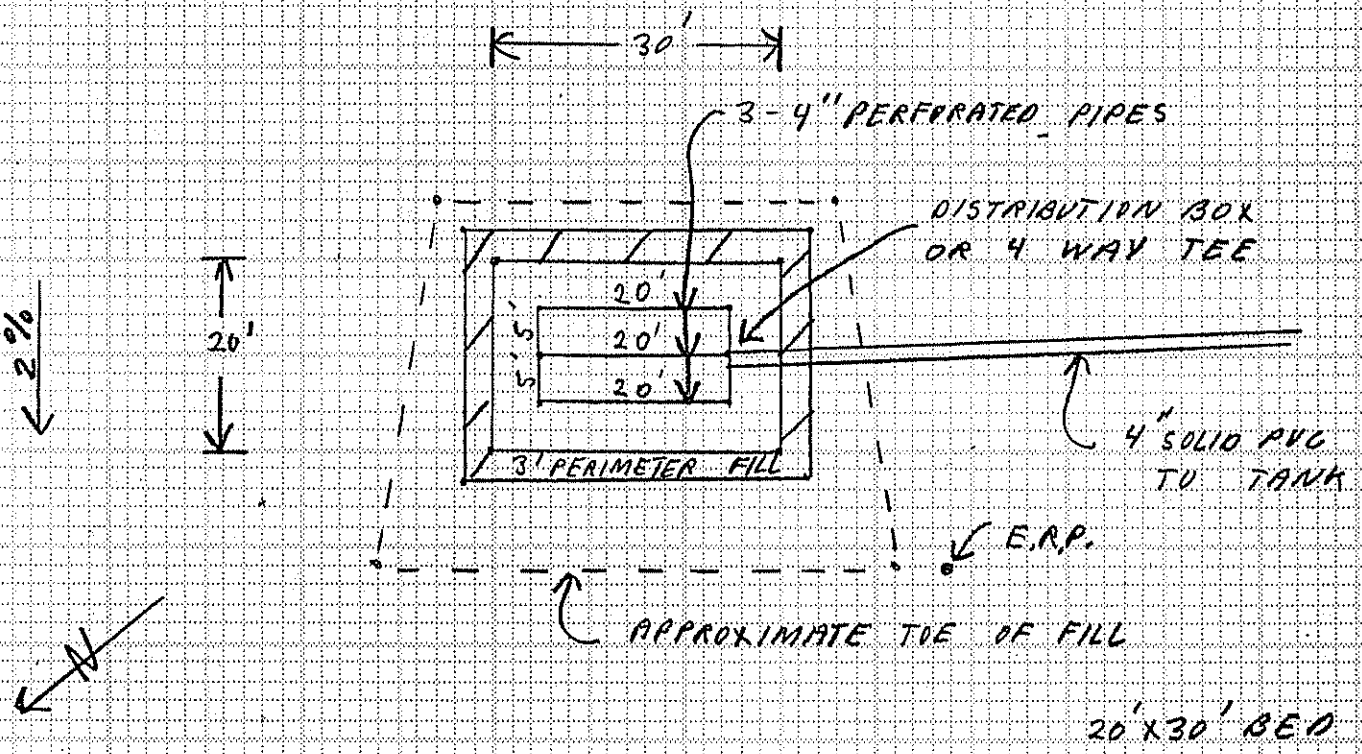

FILL REQUIREMENTS	CONSTRUCTION ELEVATION	ELEVATION REFERENCE POINT
Depth of Fill (Upslope)	16" Reference Elevation is	0"
Depth of Fill (Downslope)	21" Bottom of Disposal Area	-48" E.R.P. IN 18" MAPLE, 23' WEST OF SYS., 40" ABOVE GROUND
	Top of Distribution Lines or Chambers	-37"

DISPOSAL AREA CROSS SECTION

Scale:
Vertical: 1 inch = 5 Ft.
Horizontal: 1 inch = 10 Ft.

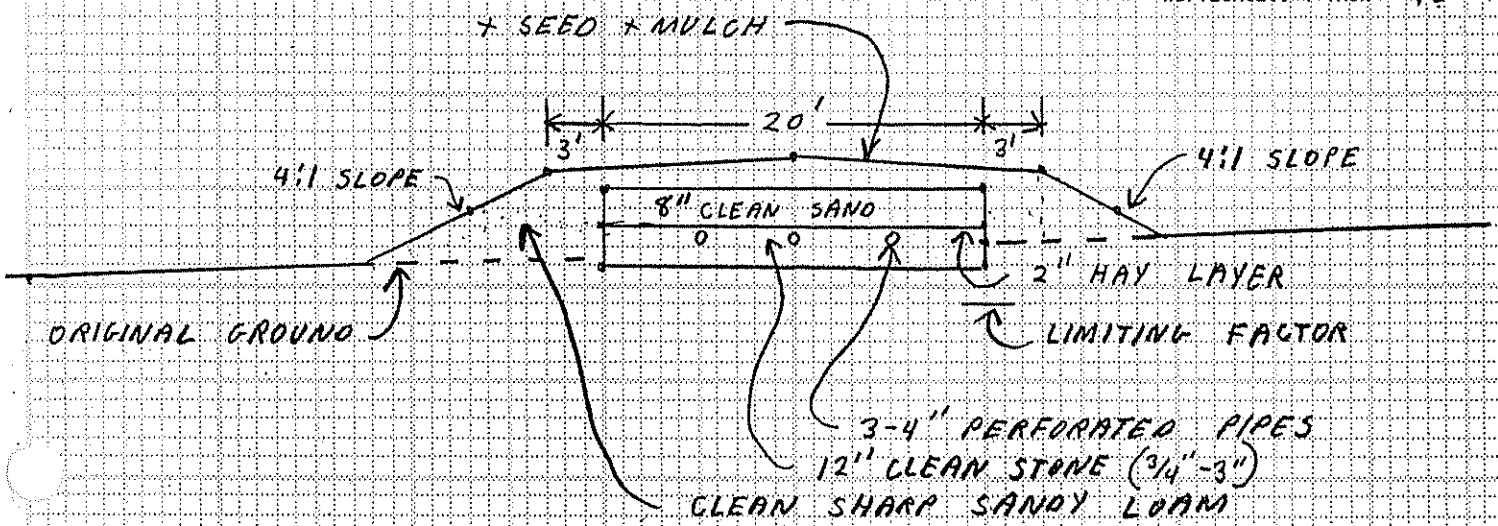

Site Evaluator Signature

256
SE#

10/4/93
Date

Approved for use as HHE 200 by Division of Health Engineering 9/87