SUBSURFACE WASTEWATER DISPOSAL SYSTEM APPLICATION

Department of Human Services
Division of Health Engineering
(207) 289-3826

PROPERTY ADDRESS

Town Or Plantation	Augusta
Street Subdivision Lot #	Blair Road Blair Estates lot # 8

PROPERTY OWNERS NAME

phone 623-1742

Last: Tapley First: Stephen

Applicant Name:	same
Mailing Address of Owner/Applicant (If Different)	Riverside Mobile Home Park Augusta, Maine 04330

0119 AUGUSTA *** 11020 ***

Date Permit Issued 10 20 83 $ 40.00 FEE ☐ If Double Charged

Robert B St Pierre L.P.I. # 1617

Local Plumbing Inspector Signature

Owner/Applicant Statement

I certify that the information submitted is correct to the best of my knowledge and understand that any falsification is reason for the Local Plumbing Inspector to deny a Permit.

Signature of Owner/Applicant — Date 10/20/83

Caution: Inspection Required

I have inspected the installation authorized above and found it to be in compliance with the Subsurface Wastewater Disposal Rules.

Robert B St Pierre — Local Plumbing Inspector Signature

Date Approved 10/28/83

PERMIT INFORMATION

THIS APPLICATION IS FOR:

1. ☒ NEW SYSTEM
2. ☐ REPLACEMENT SYSTEM
3. ☐ EXPANDED SYSTEM
4. ☐ SEASONAL CONVERSION
5. ☐ EXPERIMENTAL SYSTEM

THIS APPLICATION REQUIRES:

1. ☒ NO RULE VARIANCE REQUIRED
2. ☐ NEW SYSTEM VARIANCE
   Attach New System Variance Form
   ☐ REPLACEMENT SYSTEM VARIANCE
   Attach Replacement System Variance Form
   3. ☐ Requires only Local Plumbing Inspector Approval
   4. ☐ Requires both State and Local Plumbing Inspector Approval

INSTALLATION IS

COMPLETE SYSTEM

1. ☒ NON-ENGINEERED SYSTEM
2. ☐ PRIMITIVE SYSTEM (Includes Alternative Toilet)
3. ☐ ENGINEERED (+2000 gpd)

INDIVIDUALLY INSTALLED COMPONENTS:

4. ☐ TREATMENT TANK (ONLY)
5. ☐ HOLDING TANK
6. ☐ ALTERNATIVE TOILET (ONLY)
7. ☐ NON-ENGINEERED DISPOSAL AREA (ONLY)
8. ☐ ENGINEERED DISPOSAL AREA (ONLY)
9. ☐ SEPARATED LAUNDRY SYSTEM

IF REPLACEMENT SYSTEM:

YEAR FAILING SYSTEM INSTALLED _____

THE FAILING SYSTEM IS:

1. ☐ BED 3. ☐ TRENCH
2. ☐ CHAMBER 4. ☐ OTHER: _____

DISPOSAL SYSTEM TO SERVE:

1. ☒ SINGLE FAMILY DWELLING
2. ☐ MODULAR OR MOBILE HOME
3. ☐ MULTIPLE FAMILY DWELLING
4. ☐ OTHER _____ SPECIFY

SIZE OF PROPERTY	ZONING
1.05 Ac.	none

TYPE OF WATER SUPPLY

well planned

DESIGN DETAILS (SYSTEM LAYOUT SHOWN ON PAGE 3)

TREATMENT TANK

1. ☒ SEPTIC: ☐ Regular ☐ Low Profile
2. ☐ AEROBIC

SIZE: 1000 GALS.

WATER CONSERVATION

1. ☒ NONE
2. ☐ LOW VOLUME TOILET
3. ☐ SEPARATED LAUNDRY SYSTEM
4. ☐ ALTERNATIVE TOILET

SPECIFY: _____

PUMPING

1. ☒ NOT REQUIRED
2. ☐ MAY BE REQUIRED (DEPENDING ON TREATMENT TANK LOCATION AND ELEVATION)
3. ☐ REQUIRED

DOSE: _____ GALS.

CRITERIA USED FOR DESIGN FLOW (BEDROOMS, SEATING, EMPLOYEES, WATER RECORDS, ETC.)

3 bedroom home

SOIL CONDITIONS USED FOR DESIGN PURPOSES

PROFILE	CONDITION
2	C

DEPTH TO LIMITING FACTOR: 34"

SIZE RATINGS USED FOR DESIGN PURPOSES

1. ☐ SMALL
2. ☐ MEDIUM
3. ☒ MEDIUM-LARGE
4. ☐ LARGE
5. ☐ EXTRA LARGE

DISPOSAL AREA TYPE/SIZE

1. ☒ BED 900 Sq. Ft.
2. ☐ CHAMBER _____ Sq. Ft.
   ☐ REGULAR ☐ H-20
3. ☐ TRENCH _____ Linear Ft.
4. ☐ OTHER: _____

DESIGN FLOW: 270 (GALLONS DAY)

SITE EVALUATOR STATEMENT

(☐ SITE EVALUATION WAIVED BY LOCAL OPTION)

On May 24, 1978 (date) I conducted a site evaluation for this project and certify that the data reported is accurate. The system I propose is in accordance with the Subsurface Wastewater Disposal Rules.

Lloyd C. Howe — Site Evaluator or Professional Engineer's Signature

42 — SE# PE#

September 14, 1983 — Date

* Local Plumbing Inspectors Signature if a Local Site Evaluation Waiver under a Local Option

City

SUBSURFACE WASTEWATER DISPOSAL SYSTEM APPLICATION

Department of Human Services
Division of Health Engineering

Town, City, Plantation: Augusta

Street, Road, Subdivision: Blair Road

Owners Name: Stephen Tapley

SITE PLAN

Scale 1" = 50 ft.

SITE LOCATION PLAN (Attach Map from Maine Atlas for New System Variance)

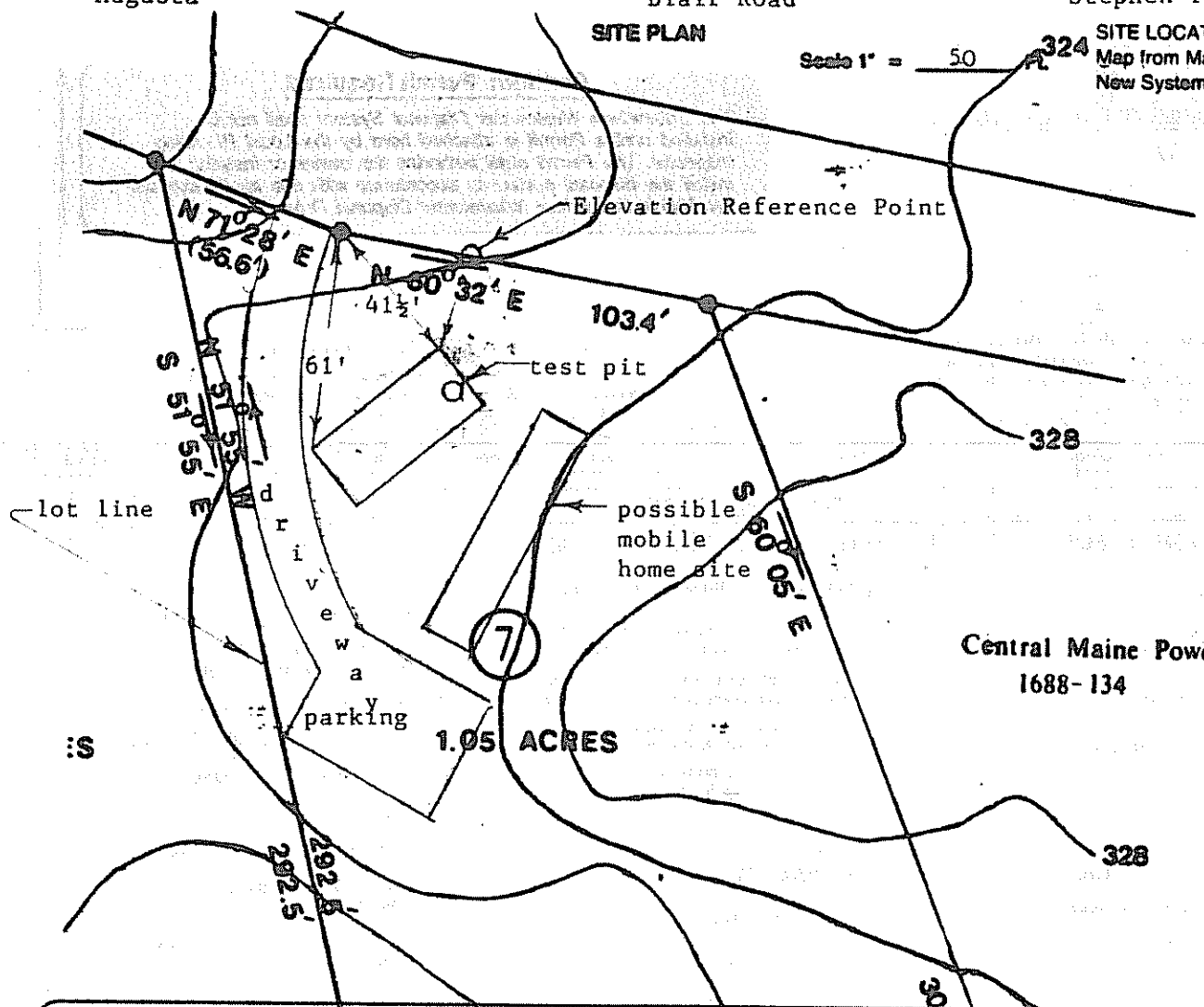

SOIL DESCRIPTION AND CLASSIFICATION (Location of Observation Holes Shown Above)

Observation Hole #1 ☒ Test Pit ☐ Boring

½" Depth of Organic Horizon Above Mineral Soil

Depth below mineral soil surface (inches)	Texture	Consistency	Color	Mottling
0–49"	sandy loam	friable	3" dark brown; 11" light brown; 35" olive brown	34" none; 15" few?

Soil	Classification	Slope	Limiting Factor
2 (Profile)	C (Condition)	7 %	34" ☒ Ground Water ☐ Restrictive Layer ☐ Bedrock

Observation Hole _____ ☐ Test Pit ☐ Boring

_____" Depth of Organic Horizon Above Mineral Soil

Depth below mineral soil surface (inches)	Texture	Consistency	Color	Mottling
0–50				

Soil	Classification	Slope	Limiting Factor
(Profile)	(Condition)	%	☐ Ground Water ☐ Restrictive Layer ☐ Bedrock

Lloyd C Rowe

SUBSURFACE WASTEWATER DISPOSAL SYSTEM APPLICATION

Department of Human Services
Division of Health Engineering

Town, City, Plantation	Street, Road, Subdivision	Owners Name
Augusta	Blair Road	Stephen Tapley

SUBSURFACE WASTEWATER DISPOSAL PLAN

Scale 1" = 20 Ft.

NOTE: Septic tank may be relocated but must be at least 5' from the crushed stone, 8' from the mobile home & 100' from any domestic water supply.

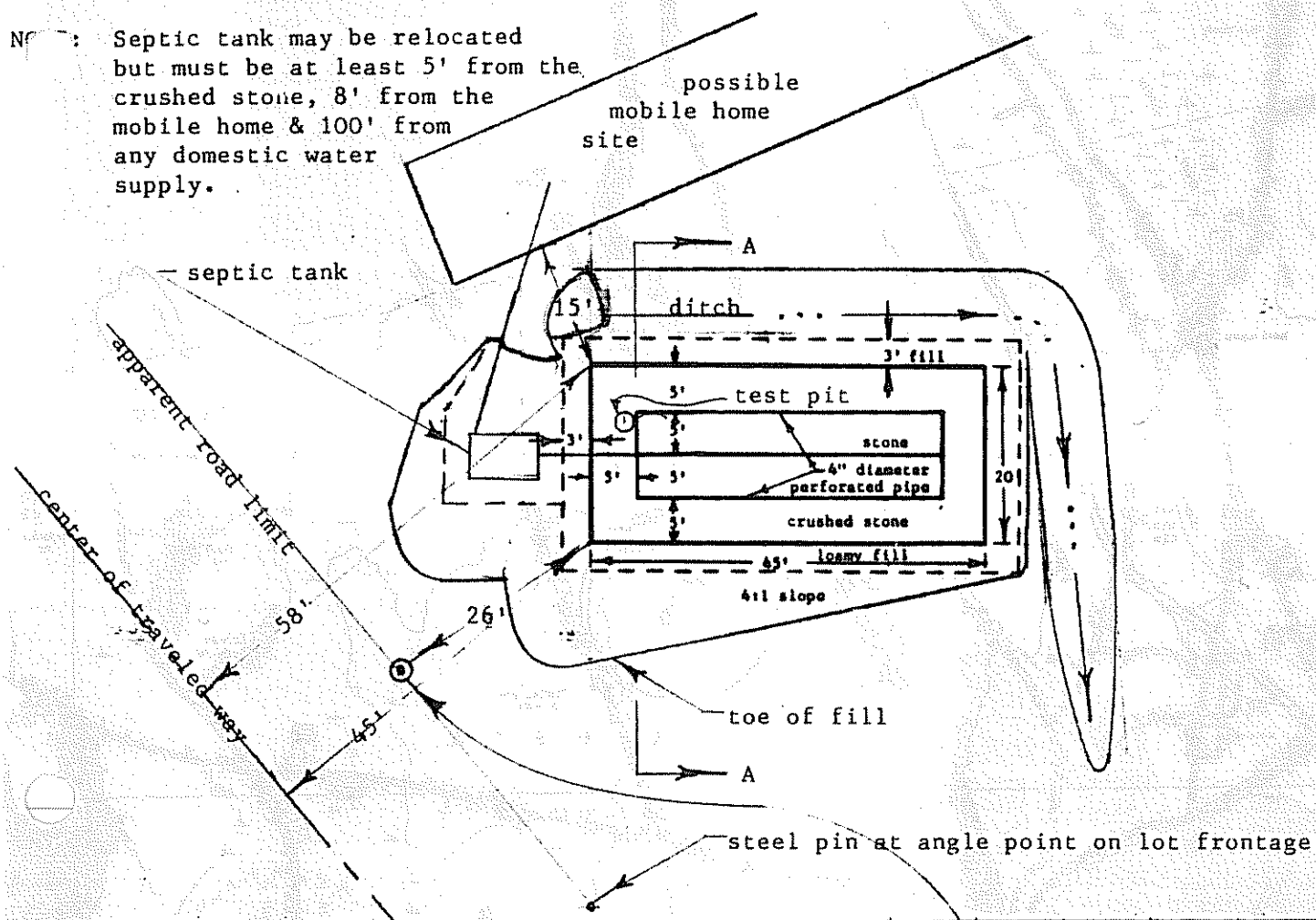

FILL REQUIREMENTS		CONSTRUCTION ELEVATIONS		ELEVATION REFERENCE POINT LOCATION & DESCRIPTION
Depth of Fill (Upslope)	2"	Reference Elevation is	50' 00"	top of 12d nail in top of high pine stump
Depth of Fill (Downslope)	18"	Bottom of Disposal Area	47' 00"	
		Top of Distribution Lines or Chambers	47' 11"	

DISPOSAL AREA CROSS SECTION

Scale:
Vertical: 1 inch = 5 Ft.
Horizontal: 1 inch = 20 Ft.

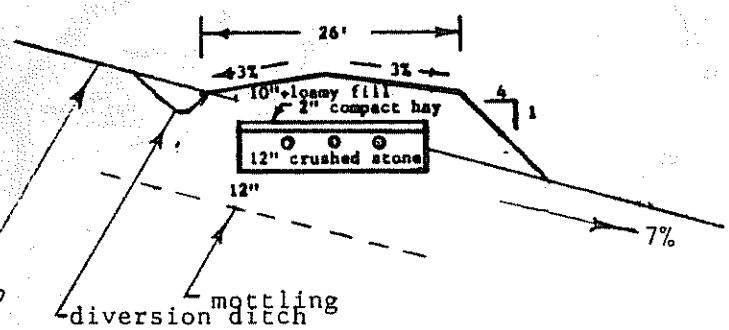

SECTION A - A

Lloyd C. Rowe
Site Evaluator or Professional Engineer's Signature

42
SE # / PE #

Sept. 13, 1983
Date

HHE-200 Rev. 4/83

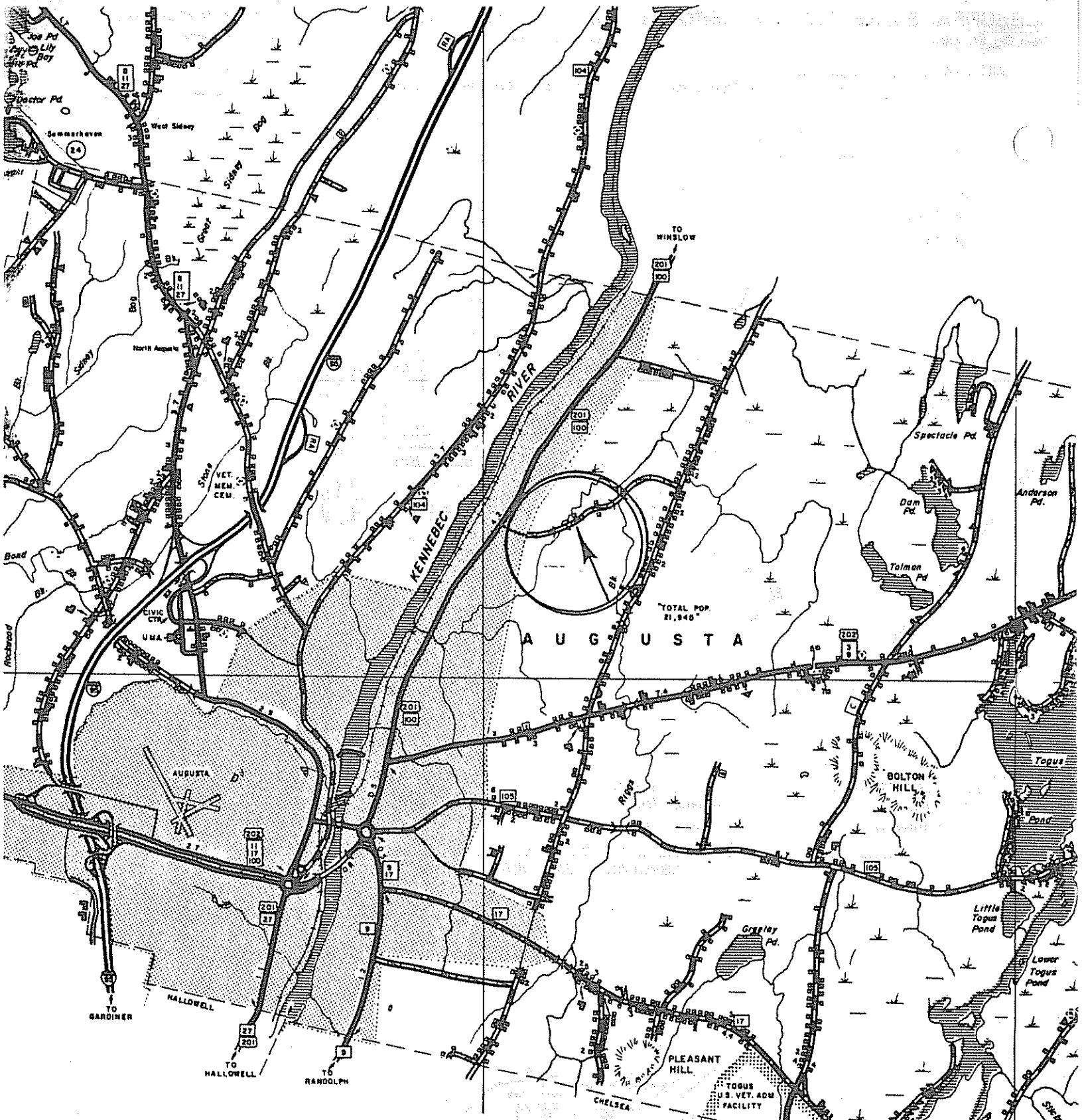

SCALE 1" = 5000' ±

MAP

20 G