623-8690

87011

Department of Human Services
Division of Health Engineering
(207)289-3826

SUBSURFACE WASTEWATER DISPOSAL SYSTEM APPLICATION

M6 L30A

AUGUSTA PERMIT # 1,085 TOWN COPY

Date Permit Issued: 9/1/87 $ 140.19 FEE ☐ If Double Fee Charged

Local Plumbing Inspector Signature L.P.I. # 6[illegible]

PROPERTY ADDRESS

Town Or Plantation	Augusta
Street Subdivision Lot #	Birch View Drive

PROPERTY OWNERS NAME

Last: Veilleux First: Joseph A.

Applicant Name:	Joseph A. Veilleux
Mailing Address of Owner/Applicant (If Different)	RFD 3, Box 12 Augusta, Maine 04330

Owner/Applicant Statement

I certify that the Information submitted is correct to the best of my knowledge and understand that any falsification is reason for the Local Plumbing Inspector to deny a Permit.

Joseph A. Veilleux — Signature of Owner/Applicant — Date

Caution: Inspection Required

I have inspected the installation authorized above and found it to be in compliance with the Subsurface Wastewater Disposal Rules.

Gary R. Tuttle — Local Plumbing Inspector Signature — 9-8-87 Date Approved

PERMIT INFORMATION

THIS APPLICATION IS FOR:

1. ☒ NEW SYSTEM
2. ☐ REPLACEMENT SYSTEM
3. ☐ EXPANDED SYSTEM
4. ☐ EXPERIMENTAL SYSTEM

SEASONAL CONVERSION

to be completed by the LPI

5. ☐ SYSTEM COMPLIES WITH RULES
6. ☐ CONNECTED TO SANITARY SEWER
7. ☐ SYSTEM INSTALLED – P# _____
8. ☐ SYSTEM DESIGN RECORDED AND ATTACHED

IF REPLACEMENT SYSTEM: n/a

YEAR FAILING SYSTEM INSTALLED _____

THE FAILING SYSTEM IS:

1. ☐ BED 3. ☐ TRENCH
2. ☐ CHAMBER 4. ☐ OTHER: _____

SIZE OF PROPERTY	ZONING
100± acres	residential

THIS APPLICATION REQUIRES:

1. ☒ NO RULE VARIANCE
2. ☐ NEW SYSTEM VARIANCE Attach New System Variance Form
3. ☐ REPLACEMENT SYSTEM VARIANCE Attach Replacement System Variance Form
   a. ☐ Requiring Local Plumbing Inspector Approval
   b. ☐ Requires State and Local Plumbing Inspector Approval
4. ☐ MINIMUM LOT SIZE VARIANCE

DISPOSAL SYSTEM TO SERVE:

1. ☐ SINGLE FAMILY DWELLING
2. ☒ MODULAR OR MOBILE HOME
3. ☐ MULTIPLE FAMILY DWELLING
4. ☐ OTHER _____ SPECIFY

INSTALLATION IS:

COMPLETE SYSTEM

1. ☒ NON-ENGINEERED SYSTEM
2. ☐ PRIMITIVE SYSTEM (Includes Alternative Toilet)
3. ☐ ENGINEERED (+2000 gpd)

INDIVIDUALLY INSTALLED COMPONENTS:

4. ☐ TREATMENT TANK (ONLY)
5. ☐ HOLDING TANK _____ GAL
6. ☐ ALTERNATIVE TOILET (ONLY)
7. ☐ NON-ENGINEERED DISPOSAL AREA (ONLY)
8. ☐ ENGINEERED DISPOSAL AREA (ONLY)
9. ☐ SEPARATED LAUNDRY SYSTEM

TYPE OF WATER SUPPLY

public water supply

DESIGN DETAILS (SYSTEM LAYOUT SHOWN ON PAGE 3)

TREATMENT TANK

1. ☒ SEPTIC: ☒ Regular ☐ Low Profile
2. ☐ AEROBIC

SIZE: 1000 GALS.

WATER CONSERVATION

1. ☒ NONE
2. ☐ LOW VOLUME TOILET
3. ☐ SEPARATED LAUNDRY SYSTEM
4. ☐ ALTERNATIVE TOILET

SPECIFY: _____

PUMPING

1. ☒ NOT REQUIRED
2. ☐ MAY BE REQUIRED (DEPENDING ON TREATMENT TANK LOCATION AND ELEVATION)
3. ☐ REQUIRED

DOSE: _____ GALS.

CRITERIA USED FOR DESIGN FLOW (BEDROOMS, SEATING, EMPLOYEES, WATER RECORDS, ETC.)

2-bedroom, single family dwelling

sized per Table 7-1 of the SSWD Rules (10-144A CMR 241)

(minimum design flow)

DESIGN FLOW: 180 gpd (GALLONS/DAY)

SOIL CONDITIONS USED FOR DESIGN PURPOSES

PROFILE	CONDITION
3	C

(original soil)

DEPTH TO LIMITING FACTOR: 29 from top of old fill

SIZE RATINGS USED FOR DESIGN PURPOSES

1. ☐ SMALL
2. ☐ MEDIUM
3. ☒ MEDIUM-LARGE
4. ☐ LARGE
5. ☐ EXTRA LARGE

DISPOSAL AREA TYPE/SIZE

1. ☒ BED 600 Sq. Ft.
2. ☐ CHAMBER _____ Sq. Ft. ☐ REGULAR ☐ H-20
3. ☐ TRENCH _____ Linear Ft.
4. ☐ OTHER: _____

SITE EVALUATOR STATEMENT

On 6-6-87 (date) I conducted a site evaluation for this project and certify that the data reported is accurate. The system I propose is in accordance with the Subsurface Wastewater Disposal Rules.

William T. Noble — Site Evaluator Signature — 75 SE — 6-15-87 Date

(Local Plumbing Inspector's Signature if permit is for Seasonal Conversion.)

RECEIVED JUN 25 1987

STATE OF MAINE WILLIAM T. NOBLE #75 LICENSED SITE EVALUATOR

87011

SUBSURFACE WASTEWATER DISPOSAL SYSTEM APPLICATION

Department of Human Services
Division of Health Engineering

Town, City, Plantation	Street, Road, Subdivision	Owners Name
AUGUSTA	BIRCH VIEW DRIVE	JOSEPH A. VEILLEUX

SITE PLAN

Scale 1" = 40 Ft.

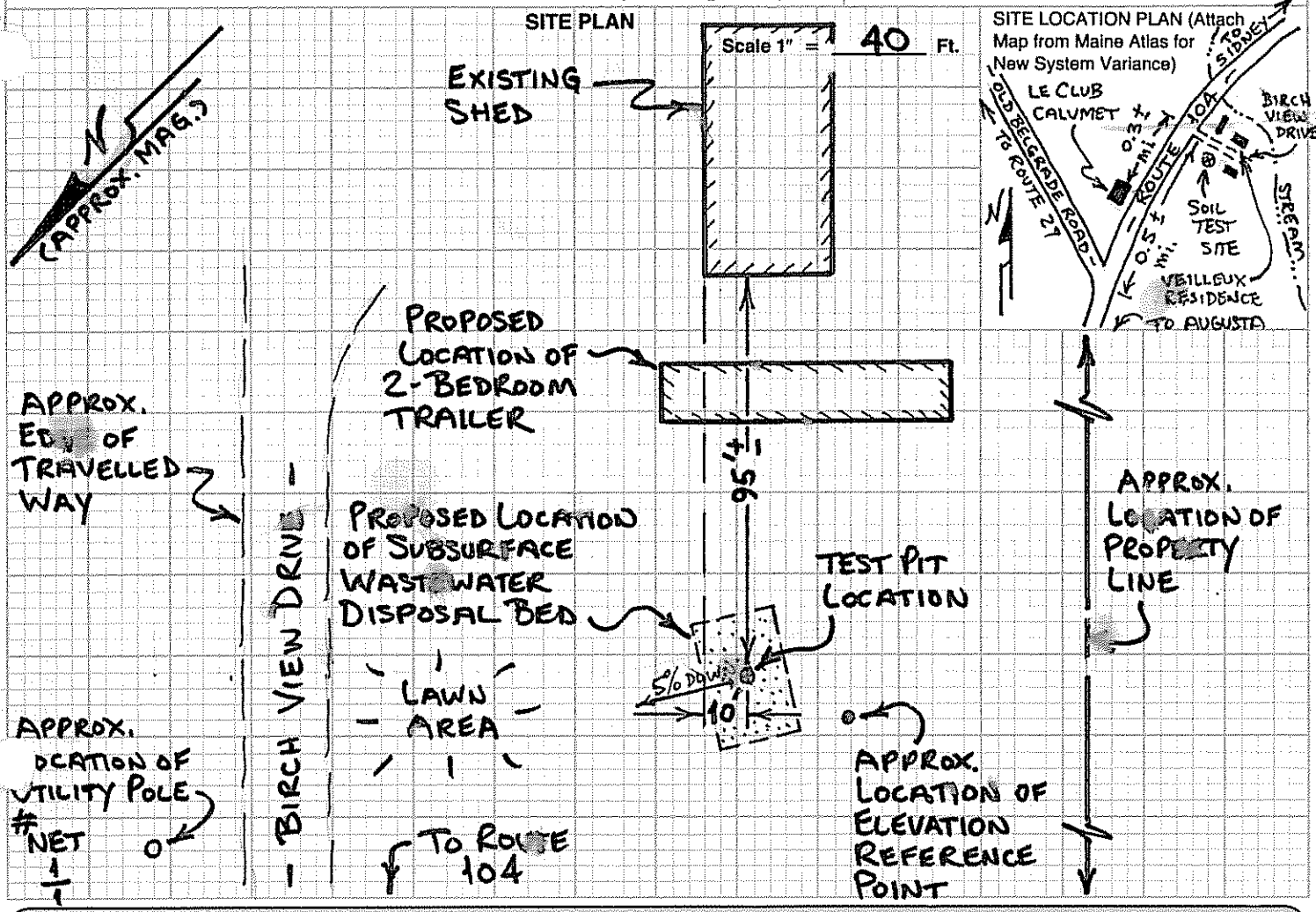

SITE LOCATION PLAN (Attach Map from Maine Atlas for New System Variance)

SOIL DESCRIPTION AND CLASSIFICATION (Location of Observation Holes Shown Above)

Observation Hole 1 ☒ Test Pit ☐ Boring

1/2 " Depth of Organic Horizon Above Mineral Soil

DEPTH BELOW MINERAL SOIL SURFACE (Inches)

Depth	Texture	Consistency	Color	Mottling
0–6	SANDY LOAM	VERY FRIABLE	DARK BROWN	OLD FILL APPROX. 20+ YEARS OLD
6–15				
15–20	VERY FINE SANDY LOAM	FRIABLE	DARK OLIVE	
20–30			OLIVE	
30–40	FINE SANDY LOAM		GRAYISH WHITE STRONG BROWN	
40–50	GRAVELLY FINE SANDY LOAM	FIRM	YELLOWISH BROWN / OLIVE GRAY	FEW FAINT

Soil Profile	Classification Condition	Slope %	Limiting Factor	
3	C	5	29	☐ Ground Water ☒ Restrictive Layer ☐ Bedrock
(ORIGINAL SOIL)			(FROM TOP OF FILL)	

Observation Hole _____ ☐ Test Pit ☐ Boring

_____ " Depth of Organic Horizon Above Mineral Soil

DEPTH BELOW MINERAL SOIL SURFACE (Inches)

Depth	Texture	Consistency	Color	Mottling
0–6				
6–15				
15–20				
20–30				
30–40				
40–50				

Soil Profile	Classification Condition	Slope %	Limiting Factor	
				☐ Ground Water ☐ Restrictive Layer ☐ Bedrock

William J. Noble
Site Evaluator Signature

75
SE#

6-15-87
Date

HHE-200 Rev. 1/84

Department of Human Services 87011
Division of Health Engineering

SUBSURFACE WASTEWATER DISPOSAL SYSTEM APPLICATION

Town, City, Plantation	Street, Road, Subdivision	Owners Name
AUGUSTA	BIRCH VIEW DRIVE	JOSEPH A. VEILLEX

SUBSURFACE WASTEWATER DISPOSAL PLAN

Scale 1" = 20 Ft.

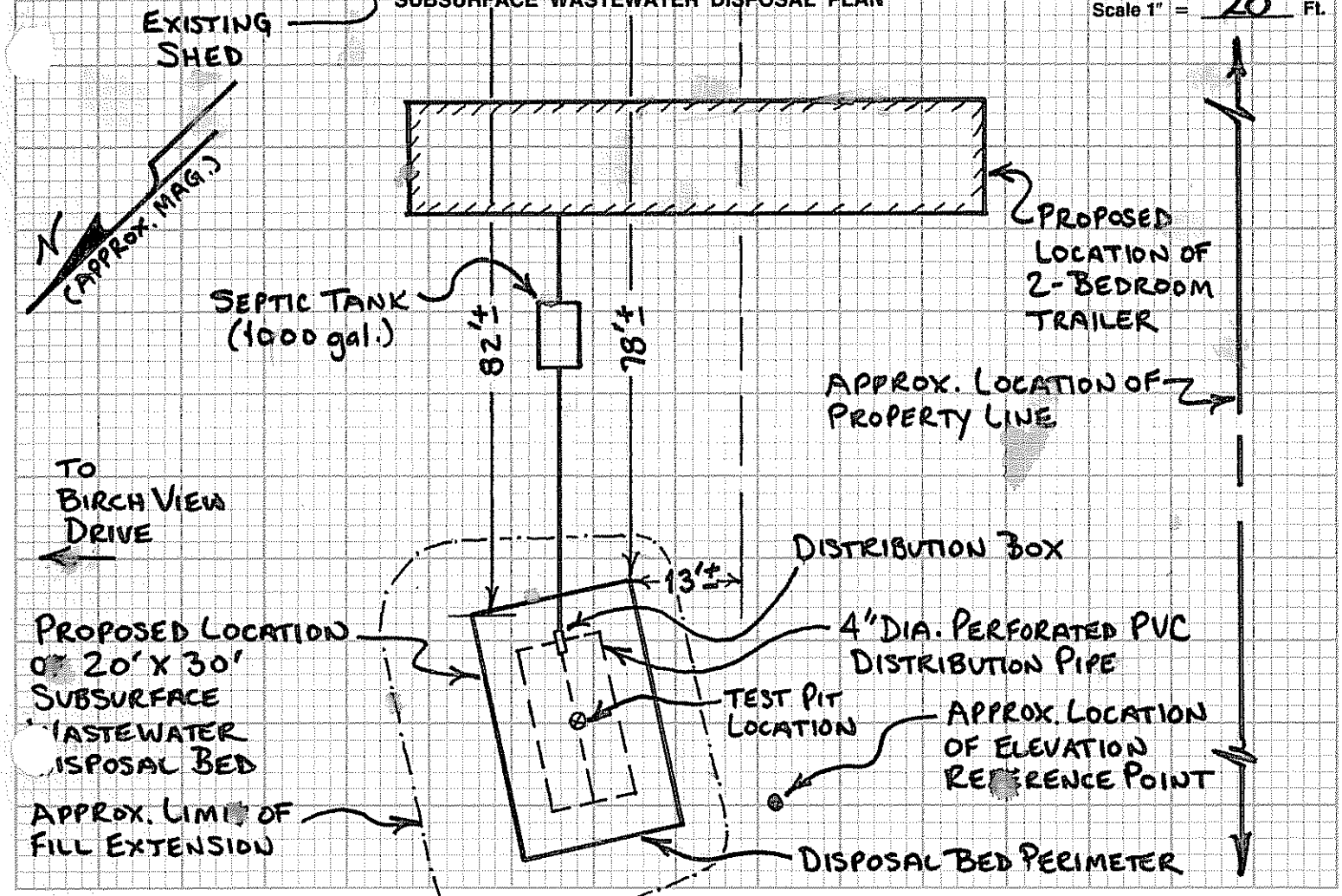

FILL REQUIREMENTS

Depth of Fill (Upslope)	7"
Depth of Fill (Downslope)	19±"

CONSTRUCTION ELEVATIONS

Reference Elevation is	0.0"
Bottom of Disposal Area	-74.0"
Top of Distribution Lines or Chambers	-63.0"

ELEVATION REFERENCE POINT LOCATION & DESCRIPTION

NAIL WITH ORANGE FLAGGING IN WHITE PINE TREE, 40" ABOVE GROUND LEVEL AT TREE BASE.

NOTES:

1. BACKFILL & PERIMETER FILL TO BE SANDY LOAM OR COARSER.
2. GRADE LAND AROUND DISPOSAL BED TO DIVERT ANY WATER FROM AREA.
3. REMOVE ANY ORGANIC LAYER & SCARIFY THE SOIL SURFACE BEFORE INSTALLING FILL.
4. REQUIRED FILL DEPTHS MAY VARY FROM THOSE SHOWN DUE TO IRREGULARITIES IN SOIL SURFACE.
5. LOCATE TEST PIT ON THE LOT & POSITION CENTERLINE OF BED OVER PIT AS SHOWN IN ABOVE PLAN.
6. REFER TO SECTIONS 11 & 12 IN SSWD RULES FOR FURTHER BED INSTALLATION DETAILS.

DISPOSAL AREA CROSS SECTION

Scale:
Vertical: 1 inch = 10 Ft.
Horizontal: 1 inch = 10 Ft.

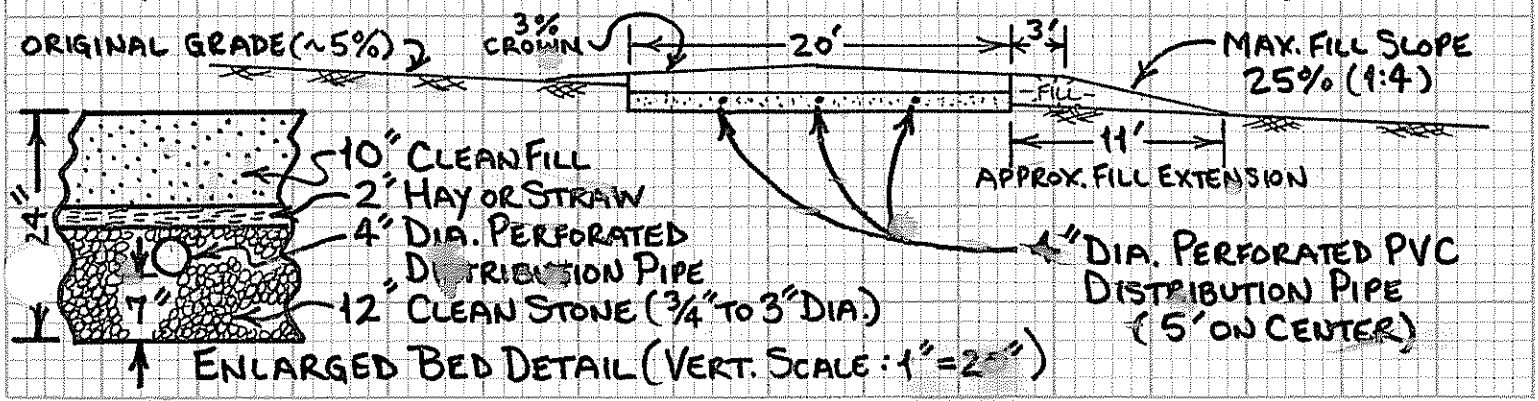

William J. Noble
Site Evaluator Signature

75
SE#

5-15-87
Date