86054

Department of Human Services
Division of Health Engineering
(207) 289-3826

SUBSURFACE WASTEWATER DISPOSAL SYSTEM APPLICATION

M6 L30A

AUGUSTA PERMIT # 899 TOWN COPY

Date Permit Issued: 11-3-86 $ 150.00 FEE ☐ If Double Fee Charged

Local Plumbing Inspector Signature L.P.I. # 1012

PROPERTY ADDRESS

Town Or Plantation	Augusta
Street xdivision Lot #	Birch View Drive

PROPERTY OWNERS NAME

Last: Veilleux First: Joseph A.

Applicant Name:	Joseph A. Veilleux
Mailing Address of Owner/Applicant (If Different)	RFD 3, Box 12 Augusta, Maine 04330

Owner/Applicant Statement

I certify that the Information submitted is correct to the best of my knowledge and understand that any falsification is reason for the Local Plumbing Inspector to deny a Permit.

Signature of Owner/Applicant — Date

Caution: Inspection Required

I have inspected the installation authorized above and found it to be in compliance with the Subsurface Wastewater Disposal Rules.

Local Plumbing Inspector Signature — Date Approved 11-3-86

PERMIT INFORMATION

THIS APPLICATION IS FOR:

1. ☒ NEW SYSTEM
2. ☐ REPLACEMENT SYSTEM
3. ☐ EXPANDED SYSTEM
4. ☐ SEASONAL CONVERSION
5. ☐ EXPERIMENTAL SYSTEM

THIS APPLICATION REQUIRES:

1. ☒ NO RULE VARIANCE REQUIRED
2. ☐ NEW SYSTEM VARIANCE Attach New System Variance Form
   ☐ REPLACEMENT SYSTEM VARIANCE Attach Replacement System Variance Form
3. ☐ Requiring Local Plumbing Inspector Approval
4. ☐ Requires State and Local Plumbing Inspector Approval

INSTALLATION IS:

COMPLETE SYSTEM

1. ☒ NON-ENGINEERED SYSTEM
2. ☐ PRIMITIVE SYSTEM (Includes Alternative Toilet)
3. ☐ ENGINEERED (+2000 gpd)

INDIVIDUALLY INSTALLED COMPONENTS:

4. ☐ TREATMENT TANK (ONLY)
5. ☐ HOLDING TANK
6. ☐ ALTERNATIVE TOILET (ONLY)
7. ☐ NON-ENGINEERED DISPOSAL AREA (ONLY)
8. ☐ ENGINEERED DISPOSAL AREA (ONLY)
9. ☐ SEPARATED LAUNDRY SYSTEM

IF REPLACEMENT SYSTEM:

YEAR FAILING SYSTEM INSTALLED n/a

THE FAILING SYSTEM IS:

1. ☐ BED 3. ☐ TRENCH
2. ☐ CHAMBER 4. ☐ OTHER: _____

DISPOSAL SYSTEM TO SERVE:

1. ☐ SINGLE FAMILY DWELLING
2. ☒ MODULAR OR MOBILE HOME
3. ☐ MULTIPLE FAMILY DWELLING
4. ☐ OTHER _____ SPECIFY

SIZE OF PROPERTY

100 ± acres

ZONING

TYPE OF WATER SUPPLY

public water supply

DESIGN DETAILS (SYSTEM LAYOUT SHOWN ON PAGE 3)

TREATMENT TANK

1. ☒ SEPTIC: ☒ Regular ☐ Low Profile
2. ☐ AEROBIC

SIZE: 1000 GALS.

WATER CONSERVATION

1. ☒ NONE
2. ☐ LOW VOLUME TOILET
3. ☐ SEPARATED LAUNDRY SYSTEM
4. ☐ ALTERNATIVE TOILET

SPECIFY: _____

PUMPING

1. ☒ NOT REQUIRED
2. ☐ MAY BE REQUIRED (DEPENDING ON TREATMENT TANK LOCATION AND ELEVATION)
3. ☐ REQUIRED

DOSE: _____ GALS.

CRITERIA USED FOR DESIGN FLOW (BEDROOMS, SEATING, EMPLOYEES, WATER RECORDS, ETC.)

1-bedroom, single family dwelling

sized per Table 7-1 of the SSWD Rules (10-144A CMR 241)

(minimum design flow)

DESIGN FLOW: 180 gpd (GALLONS/DAY)

SOIL CONDITIONS USED FOR DESIGN PURPOSES

PROFILE	CONDITION
3	C

DEPTH TO LIMITING FACTOR: 18"

SIZE RATINGS USED FOR DESIGN PURPOSES

1. ☐ SMALL
2. ☐ MEDIUM
3. ☒ MEDIUM-LARGE
4. ☐ LARGE
5. ☐ EXTRA LARGE

DISPOSAL AREA TYPE/SIZE

1. ☒ BED 600 Sq. Ft.
2. ☐ CHAMBER _____ Sq. Ft.
   ☐ REGULAR ☐ H-20
3. ☐ TRENCH _____ Linear Ft.
4. ☐ OTHER: _____

SITE EVALUATOR STATEMENT

☐ SITE EVALUATION WAIVED BY LOCAL OPTION

On 10-25-86 (date) I conducted a site evaluation for this project and certify that the data reported is accurate. The system I propose is in accordance with the Subsurface Wastewater Disposal Rules.

Site Evaluator Signature — SE# 75 — Date 10-27-86

STATE OF MAINE WILLIAM T NOBLE #75 LICENSED SITE EVALUATOR

* Local Plumbing Inspectors Signature if a Local Site Evaluation Waiver under a Local Option

86054

SUBSURFACE WASTEWATER DISPOSAL SYSTEM APPLICATION

Department of Human Services
Division of Health Engineering

Town, City, Plantation	Street, Road, Subdivision	Owners Name
AUGUSTA	BIRCH VIEW DRIVE	JOSEPH A. VEILLEUX

SITE PLAN

Scale 1" = 40 Ft.

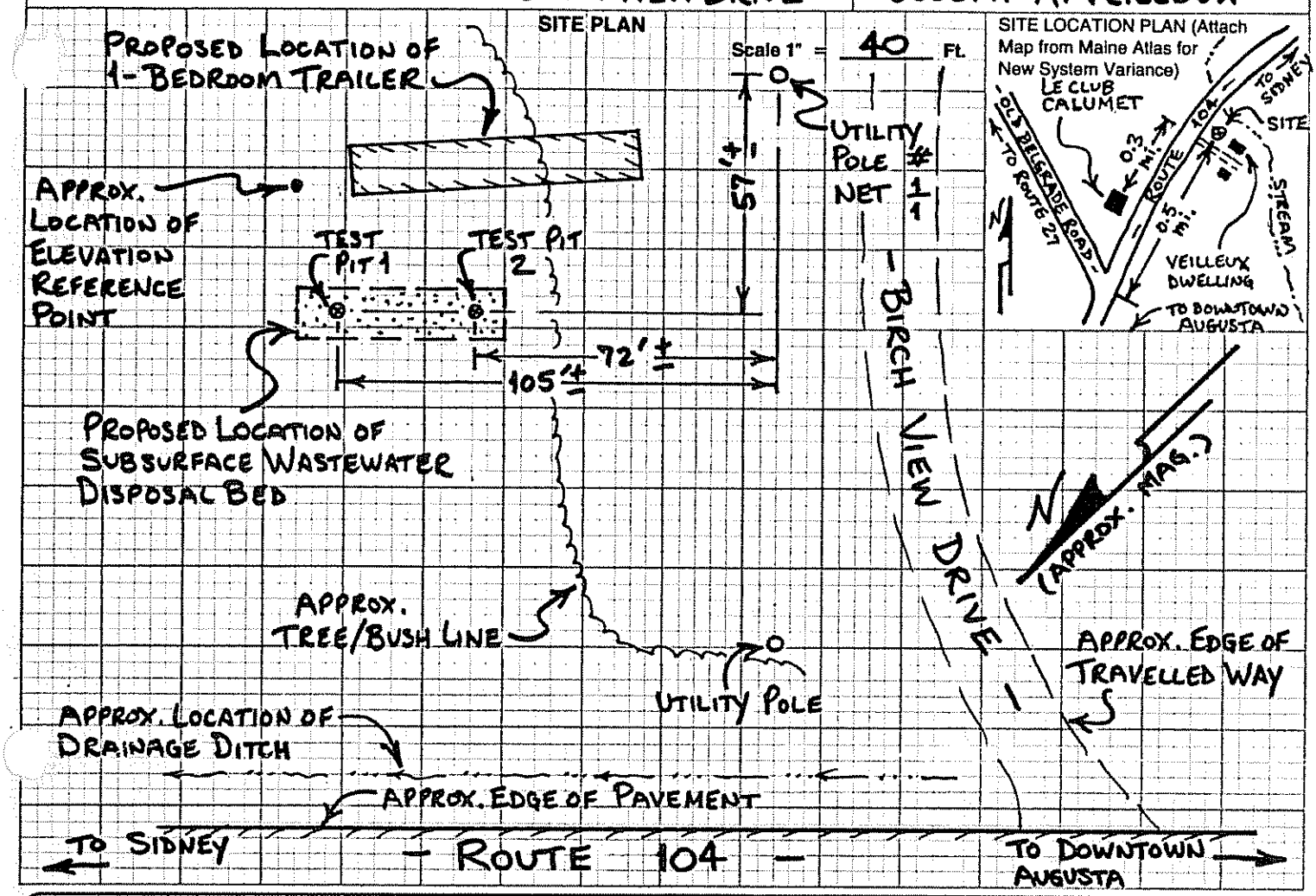

SITE LOCATION PLAN (Attach Map from Maine Atlas for New System Variance)

SOIL DESCRIPTION AND CLASSIFICATION (Location of Observation Holes Shown Above)

Observation Hole 1 ☒ Test Pit ☐ Boring

1/2 " Depth of Organic Horizon Above Mineral Soil

DEPTH BELOW MINERAL SOIL SURFACE (Inches): 0, 6, 10, 15, 20, 30, 40, 50

Texture	Consistency	Color	Mottling
FINE SANDY LOAM	FRIABLE	DARK BROWN; REDDISH BROWN; YELLOWISH BROWN	
GRAVELLY SANDY LOAM	FIRM, BRITTLE	LIGHT OLIVE BROWN; OLIVE GRAY	COMMON DISTINCT

Soil Profile	Classification Condition	Slope %	Limiting Factor	
3	C	10	18"	☒ Ground Water ☐ Restrictive Layer ☐ Bedrock

Observation Hole 2 ☒ Test Pit ☐ Boring

1/2 " Depth of Organic Horizon Above Mineral Soil

DEPTH BELOW MINERAL SOIL SURFACE (Inches): 0, 6, 10, 15, 20, 30, 40, 50

Texture	Consistency	Color	Mottling
FINE SANDY LOAM	FRIABLE	REDDISH BROWN; DARK YELLOWISH BROWN; YELLOWISH BROWN	
	FIRM, BRITTLE	PALE OLIVE	FEW FAINT

NOTE: SOIL AT TP2 IS OVERLAIN BY APPROX. 8" OF DARK OLIVE GRAY FINE SANDY LOAM FILL.

Soil Profile	Classification Condition	Slope %	Limiting Factor	
3	C	12	23"	☒ Ground Water ☒ Restrictive Layer ☐ Bedrock

William S. Noble
Site Evaluator Signature

75
SE#

10-27-86
Date

HHE-200 Rev. 1/84

86054

Department of Human Services
Division of Health Engineering

SUBSURFACE WASTEWATER DISPOSAL SYSTEM APPLICATION

Town, City, Plantation	Street, Road, Subdivision	Owners Name
AUGUSTA	BIRCH VIEW DRIVE	JOSEPH A. VEILLEUX

SUBSURFACE WASTEWATER DISPOSAL PLAN

Scale 1" = 20 FL

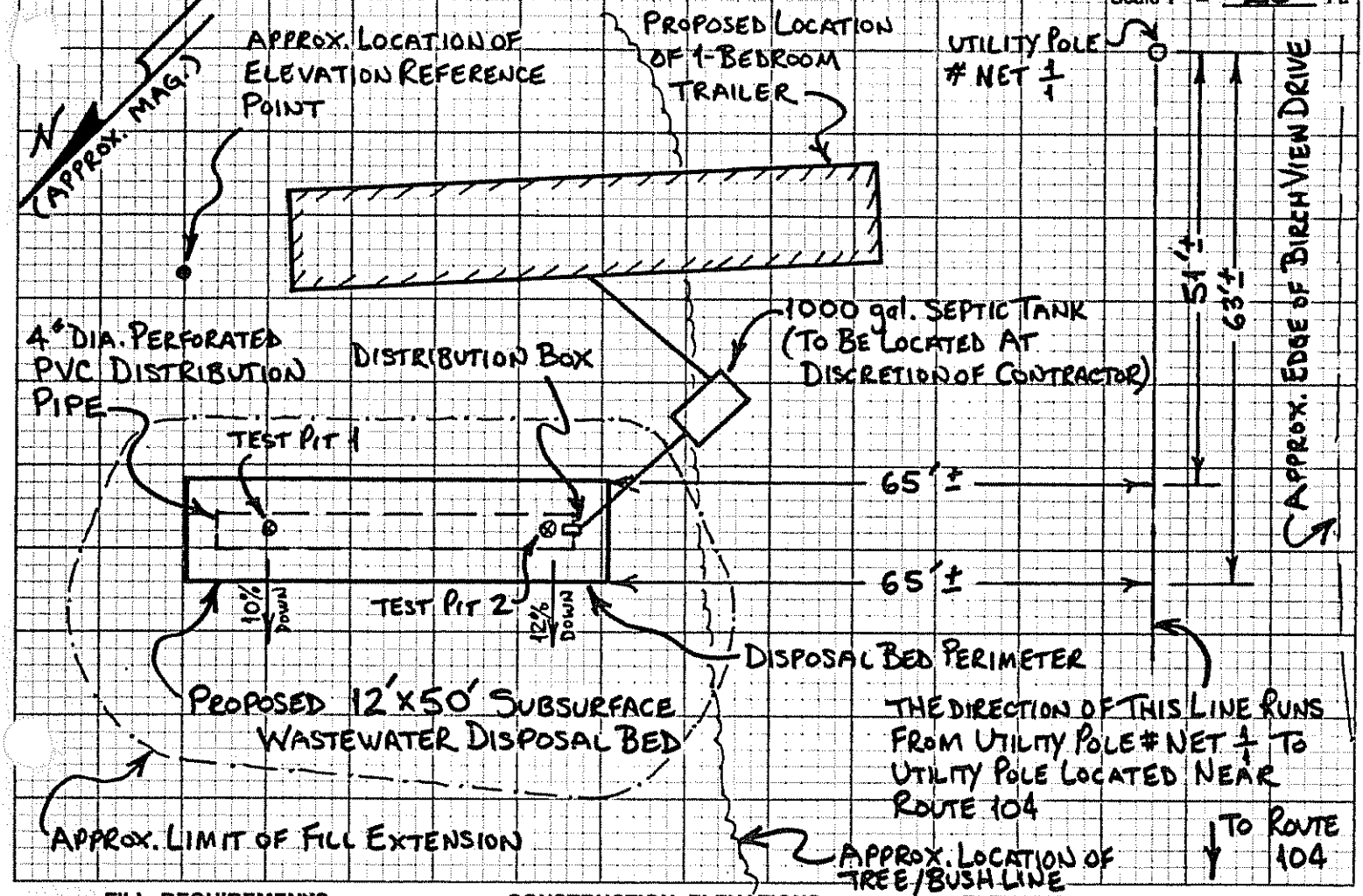

FILL REQUIREMENTS

Depth of Fill (Upslope) 18"

Depth of Fill (Downslope) (AT TEST PIT 1 AREA) 32±"

CONSTRUCTION ELEVATIONS

Reference Elevation is 0.0"

Bottom of Disposal Area -62.0"

Top of Distribution Lines -51.0"

ELEVATION REFERENCE POINT LOCATION & DESCRIPTION

NAIL WITH YELLOW FLAGGING IN WHITE PINE TREE, 25" ABOVE GROUND LEVEL AT TREE BASE.

NOTES:

1. CROSS-SECTION SHOWN IS THROUGH TP1 AREA.
2. BACKFILL & PERIMETER FILL TO BE SANDY LOAM OR COARSER.
3. GRADE LAND AROUND DISPOSAL BED TO DIVERT ANY WATER FROM AREA.
4. REMOVE ANY ORGANIC LAYER & SCARIFY THE SOIL SURFACE BEFORE INSTALLING FILL.
5. REQUIRED FILL DEPTHS MAY VARY FROM THOSE SHOWN DUE TO IRREGULARITIES IN SOIL SURFACE
6. REFER TO SECTIONS 11 & 12 IN SSWD RULES FOR FURTHER BED INSTALLATION DETAILS.

DISPOSAL AREA CROSS SECTION

Scale:

Vertical: 1 inch = 10 Ft.

Horizontal: 1 inch = 10 Ft.

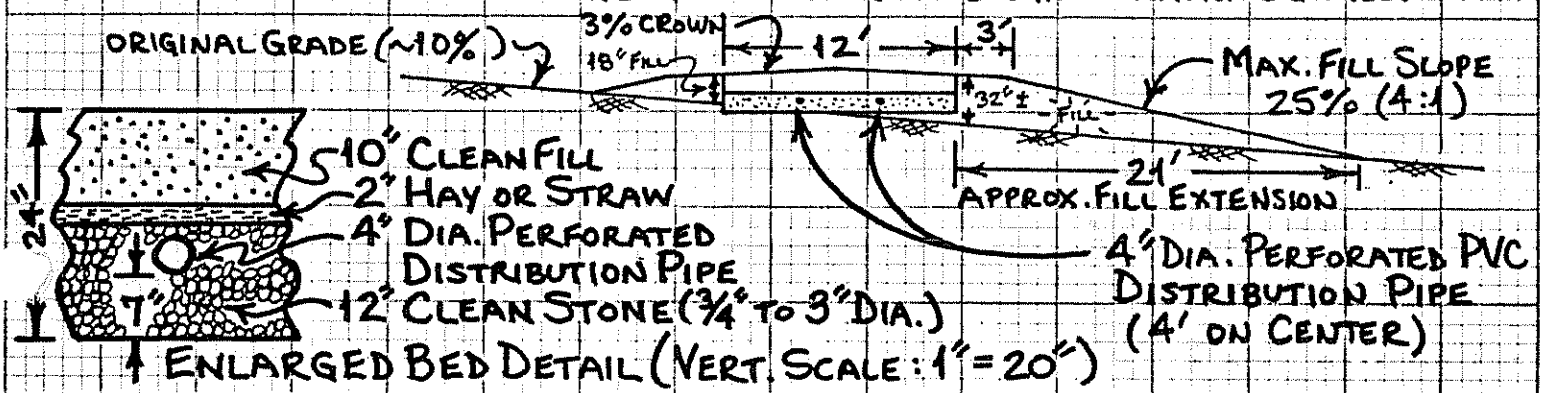

William J. Noble — Site Evaluator Signature

75 — SE#

10-27-86 — Date

HHE-200 Rev. 1/84