SUBSURFACE WASTEWATER DISPOSAL SYSTEM APPLICATION

Maine Department of Human Services
Division of Health Engineering, 10 SHS
(207) 287-5672 Fax (207) 287-3165

PROPERTY LOCATION

>> CAUTION: PERMIT REQUIRED - ATTACH IN SPACE BELOW <<

City, Town or Plantation: AUGUSTA

Street Road: 32 S+V LANE

Subdivision Lot #:

AUGUSTA 4977 TOWN COPY

Date Permit Issued: 10/30/02

Local Plumbing Inspector Signature

$ 100.00 FEE ☐ If Double Fee Charged

L.P.I. # 850

OWNER/APPLICANT INFORMATION

Name (last, first, MI): LALIGERTE, NOEL ☑ Owner ☐ Applicant

Mailing Address of Owner Applicant: 8 ROD RD. AUGUSTA, ME. 04330

Daytime Tel #: N

VOID See attached

Municipal Tax Map # 6 Lot # 247

OWNER OR APPLICANT STATEMENT

I state and acknowledge that the information submitted is correct to the best of my knowledge and understand that any falsification is reason for the Department or Local Plumbing Inspector to deny a Permit

Signature of Owner or Applicant Date

CAUTION: INSPECTION REQUIRED

I have inspected the installation authorized above and found it to be in compliance with the Subsurface Wastewater Disposal Rules Application

(1st) date approved

Local Plumbing Inspector Signature (2nd) date approved

PERMIT INFORMATION

TYPE OF APPLICATION

✓ 1. First Time System
2. Replacement System
Type replaced
Year installed
3. Expanded System
a. Minor Expansion
b. Major Expansion
4. Experimental System
5. Seasonal Conversion

THIS APPLICATION REQUIRES

✓ 1. No Rule Variance
2. First Time System Variance
a. Local Plumbing Inspector Approval
b. State & Local Plumbing Inspector Approval
3. Replacement System Variance
a. Local Plumbing Inspector Approval
b. State & Local Plumbing Inspector Approval
4. Minimum Lot Size Variance
5. Seasonal Conversion Permit

DISPOSAL SYSTEM COMPONENTS

✓ 1. Complete Non-engineered System
2. Primitive System (graywater & alt. toilet)
3. Alternative Toilet, specify
4. Non-engineered Disposal Area
5. Holding Tank, gallons
6. Non-engineered Disposal Field (only)
7. Separated Laundry System
8. Complete Engineered System (2000 gpd or more)
9. Engineered Treatment Tank (only)
10. Engineered Disposal Field (only)
11. Pre-treatment, specify:
12. Miscellaneous Components

SIZE OF PROPERTY

1 ± SQ FT ✓ ACRES

SHORELAND ZONING

Yes ✓ No

DISPOSAL SYSTEM TO SERVE

✓ 1. Single Family Dwelling Unit, No. of Bedrooms: 3
2. Multiple Family Dwelling, No. of Units:
3. Other (specify)

Current Use: Seasonal ✓ Year Round Undeveloped

TYPE OF WATER SUPPLY

✓ 1. Drilled Well 2. Dug Well 3. Private
4. Public 5. Other

DESIGN DETAILS (SYSTEM LAYOUT SHOWN ON PAGE 3)

TREATMENT TANK

✓ Concrete
✓ a. Regular
b. Low Profile
c. Plastic
d. Other
CAPACITY 4000 GAL

DISPOSAL FIELD TYPE & SIZE

✓ 1. Stone Bed 2. Stone Trench
3. Proprietary Device
a. cluster array c. Linear
b. regular load d. H-20 load
4. Other
SIZE: 900 ✓ sq. ft. lin. ft.

GARBAGE DISPOSAL UNIT

✓ 1. No 2. Yes 3. Maybe
If Yes or Maybe, specify one below:
a. multi-compartment tank
b. ___ tanks in series
c. increase in tank capacity
d. Filter on Tank Outlet

DESIGN FLOW

270 gallons per day
BASED ON
✓ 1. Table 501.1 (dwelling units)
2. Table 501.2 (other facilities)
SHOW CALCULATIONS
---- for other facilities ---
3. Section 503.0 (meter readings)
ATTACH WATER METER DATA

SOIL DATA & DESIGN CLASS

PROFILE CONDITION DESIGN
7 C 1
Test Observation Hole # 1
Depth 16"
Most Limiting Soil Factor

DISPOSAL FIELD SIZING

1. Small---2.0 sq. ft. / gpd
2. Medium---2.6 sq. ft. / gpd
✓ 3. Medium---Large 3.3 sq. ft. / gpd
4. Large---4.1 sq. ft. / gpd
5. Extra Large---5.0 sq. ft. / gpd

EFFLUENT/EJECTOR PUMP

✓ 1. Not Required
2. May Be Required
3. Required
Specify only for engineered systems:
DOSE: gallons

SITE EVALUATOR STATEMENT

I certify that on 10/25/02 (date) I completed a site evaluation on this property and state that the data reported are accurate and that the proposed system is in compliance with the State of Maine Subsurface Wastewater Disposal Rules (10-144A CMR 241)

Site Evaluator Signature — SE # 256 — Date 10/26/02

JOHN PHILBRICK
Site Evaluator Name Printed

Note: Changes to or deviations from the design should be confirmed with the Site Evaluator.

SUBSURFACE WASTEWATER DISPOSAL SYSTEM APPLICATION

Department of Human Services
Division of Health Engineering
(207) 287-5672 FAX (207) 287-4172

Town, City, Plantation: AUGUSTA

Street, Road, Subdivision: S+V LANE

Owner's Name: NOEL LALIBERTY

SITE PLAN

Scale 1" = 50 Ft. or as shown

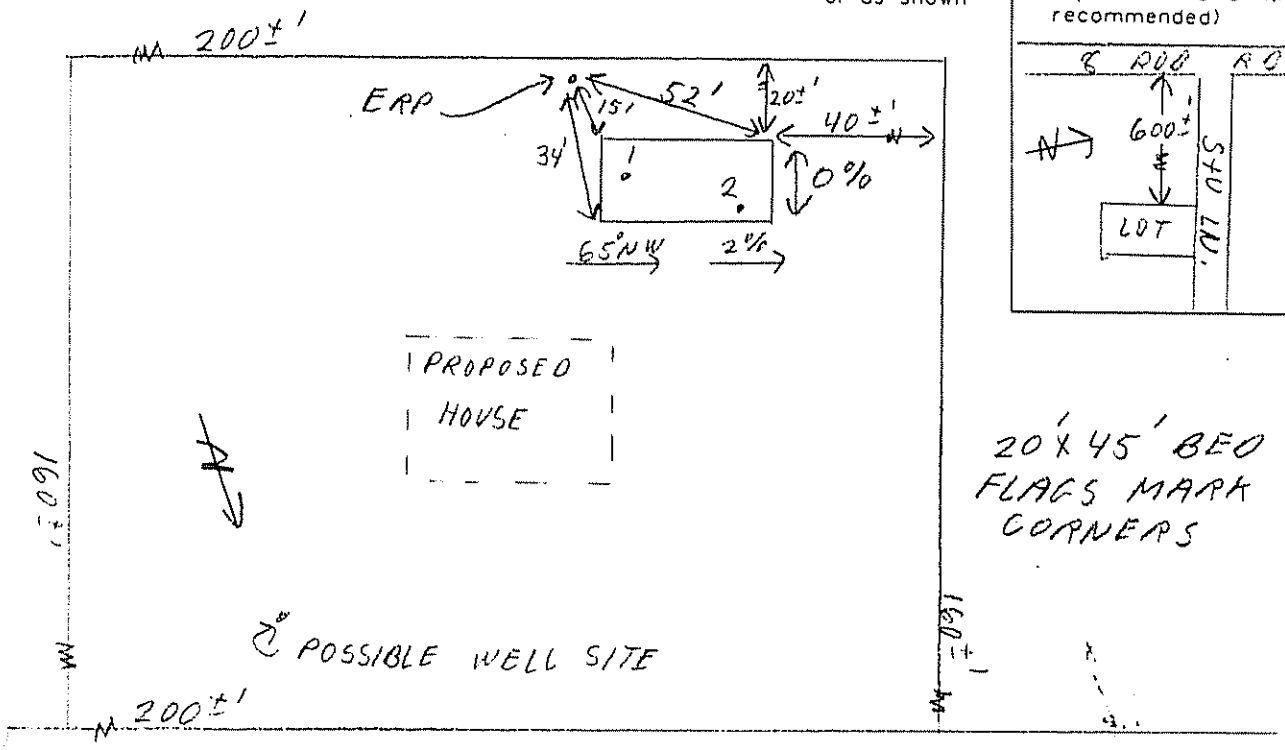

SITE LOCATION PLAN (Map from Maine Atlas recommended)

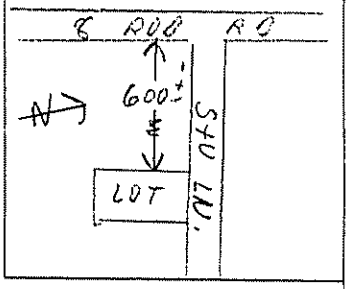

SOIL DESCRIPTION AND CLASSIFICATION (Location of Observation Holes Shown Above)

Observation Hole 1 ☑ Test Pit ☐ Boring

2± Depth of Organic Horizon Above Mineral Soil

Depth Below Mineral Soil Surface (inches)	Texture	Consistency	Color	Mottling
0	SANDY LOAM	FRIABLE	DARK BR.	NONE
10	↓	↓	YELLOW BR.	↓
20	SILTY CLAY	FIRM	GRAY	COMMON DISTINCT
30	↓	↓	↓	↓
40				
50				

Soil Classification		Slope	Limiting Factor	
7 Profile	C Condition	2 %	16"	☑ Ground Water ☑ Restrictive Layer ☐ Bedrock ☐ Pit Depth

Observation Hole 2 ☑ Test Pit ☐ Boring

2± " Depth of Organic Horizon Above Mineral Soil

Depth Below Mineral Soil Surface (inches)	Texture	Consistency	Color	Mottling
0				
10				
20		SAME	AS # 1	
30				
40				
50				

Soil Classification		Slope	Limiting Factor	
7 Profile	C Condition	2 %	16"	☑ Ground Water ☑ Restrictive Layer ☐ Bedrock ☐ Pit Depth

Site Evaluator Signature: [signature] SE # 256 Date 10/26/02

SUBSURFACE WASTEWATER DISPOSAL SYSTEM APPLICATION

08246445

Town, City, Plantation: AUGUSTA
Street, Road, Subdivision: S+V LANE
Owner's Name: NOEL LALIBERTE

SUBSURFACE WASTEWATER DISPOSAL PLAN

Scale: 1" = 20 ft or as shown

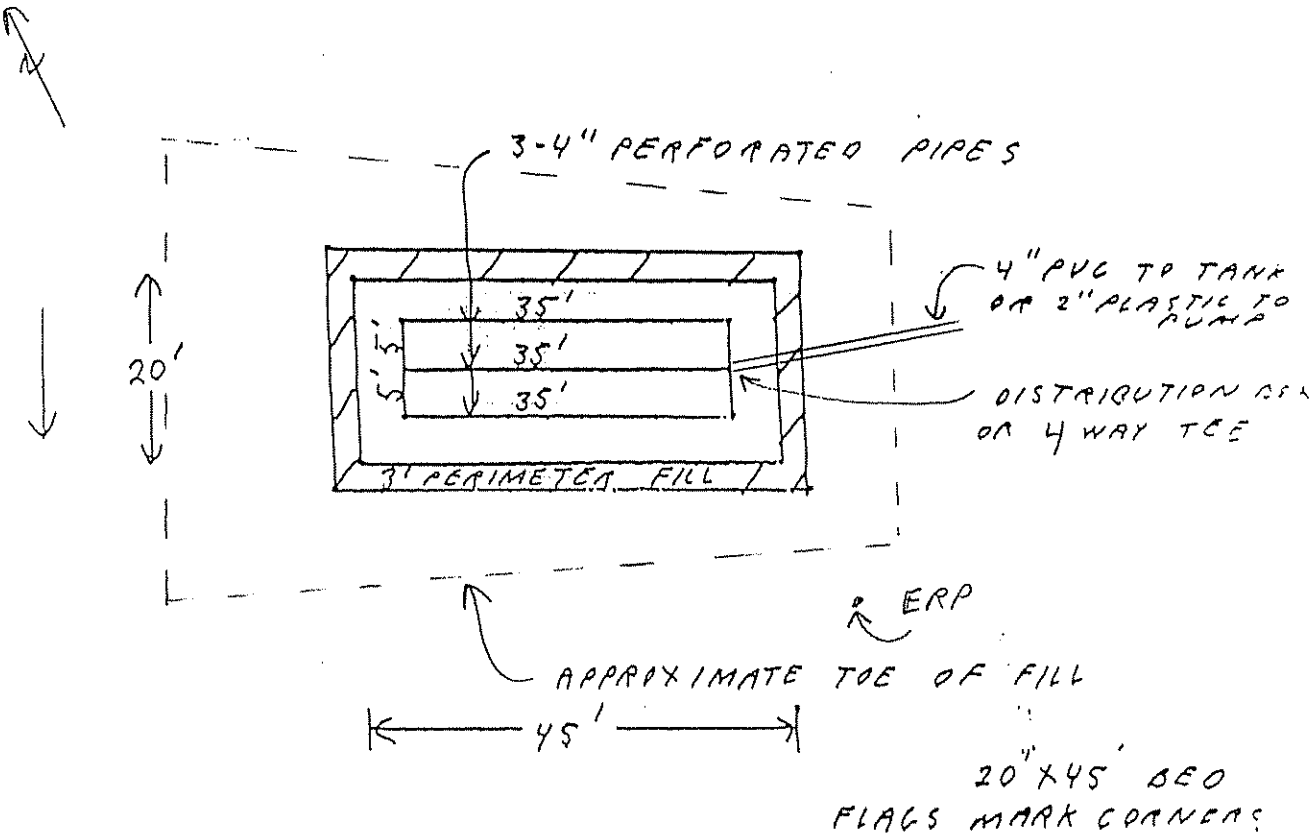

20' X 45' BED
FLAGS MARK CORNERS

FILL REQUIREMENTS
Depth of Fill (Upslope)
Depth of Fill (Downslope)

CONSTRUCTION ELEVATION
20" Reference Elevation is
31" Bottom of Disposal Area
Top of Distribution Lines or Chambers

ELEVATION REFERENCE POINT
0" ERP IS IN 4" SPRUCE, 15'
-54" SOUTH OF SYSTEM, 60"
-43" ABOVE GROUND

DISPOSAL AREA CROSS SECTION

Scale:
Vertical: 1 inch = 5 ft
Horizontal: 1 inch = 10 ft

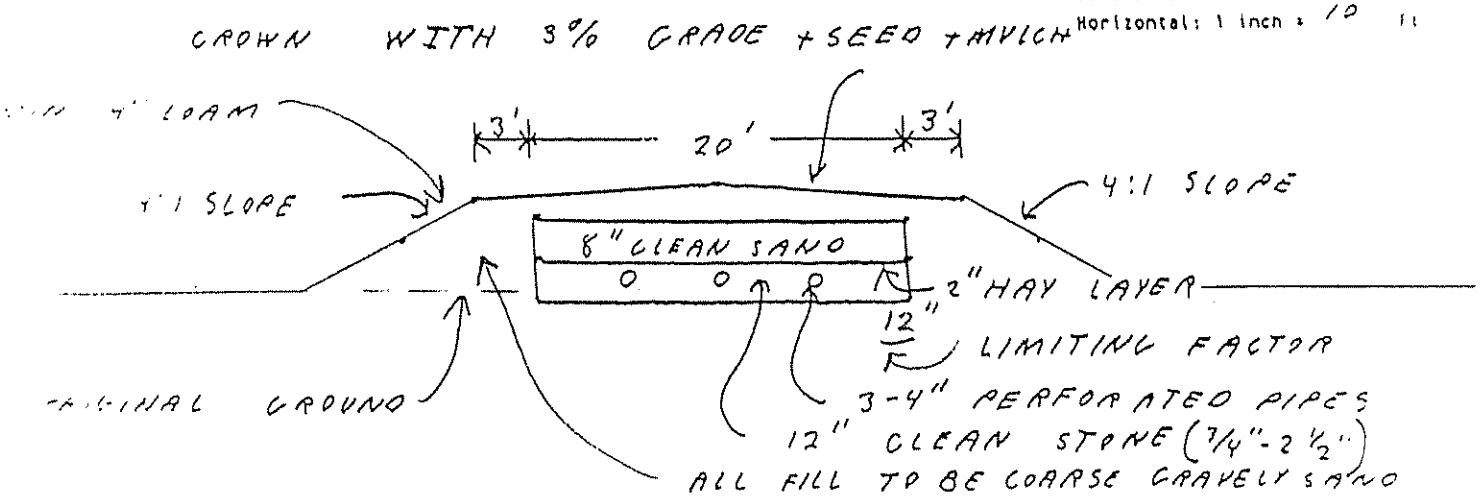

Site Evaluator Signature

256
SEN

10/26/02
Date

Approved for use as HHE 200 by Division of Health Engineering

SUBSURFACE WASTEWATER DISPOSAL SYSTEM APPLICATION

Maine Department of Human Services
Division of Health Engineering, 10 SHS
(207) 287-5672 Fax (207) 287-3165

PROPERTY LOCATION

>> CAUTION: PERMIT REQUIRED - ATTACH IN SPACE BELOW <<

City, Town or Plantation: AUGUSTA

Street Road: S+V LANE

Subdivision, Lot #:

The Subsurface Wastewater Disposal System *shall not* be installed until a Permit is attached HERE by the Local Plumbing Inspector. The Permit shall authorize the owner or installer to install the disposal system in accordance with this application and the Maine Subsurface Wastewater Disposal Rules.

OWNER/APPLICANT INFORMATION

Name (last, first, MI): LALIBERTE, NOEL ☑ Owner ☐ Applicant

Mailing Address of Owner/Applicant: 8 ROD RD.
AUGUSTA, ME. 04330

Daytime Tel #:

Municipal Tax Map # _____ Lot # _____

OWNER OR APPLICANT STATEMENT

I state and acknowledge that the information submitted is correct to the best of my knowledge and understand that any falsification is reason for the Department and/or Local Plumbing Inspector to deny a Permit.

Signature of Owner or Applicant _____ Date _____

CAUTION: INSPECTION REQUIRED

I have inspected the installation authorized above and found it to be in compliance with the Subsurface Wastewater Disposal Rules. Application 2/19/03 (1st) date approved

Local Plumbing Inspector Signature [signature] 2/20/03 (2nd) date approved

PERMIT INFORMATION

TYPE OF APPLICATION

- ☑ 1. First Time System
- ☐ 2. Replacement System
  - Type replaced _____
  - Year installed _____
- ☐ 3. Expanded System
  - a. Minor Expansion
  - b. Major Expansion
- ☐ 4. Experimental System
- ☐ 5. Seasonal Conversion

THIS APPLICATION REQUIRES

- ☑ 1. No Rule Variance
- ☐ 2. First Time System Variance
  - a. Local Plumbing Inspector Approval
  - b. State & Local Plumbing Inspector Approval
- ☐ 3. Replacement System Variance
  - a. Local Plumbing Inspector Approval
  - b. State & Local Plumbing Inspector Approval
- ☐ 4. Minimum Lot Size Variance
- ☐ 5. Seasonal Conversion Permit

DISPOSAL SYSTEM COMPONENTS

- ☑ 1. Complete Non-engineered System
- ☐ 2. Primitive System (graywater & alt. toilet)
- ☐ 3. Alternative Toilet, specify: _____
- ☐ 4. Non-engineered Disposal Area
- ☐ 5. Holding Tank, _____ gallons
- ☐ 6. Non-engineered Disposal Field (only)
- ☐ 7. Separated Laundry System
- ☐ 8. Complete Engineered System (2000 gpd or more)
- ☐ 9. Engineered Treatment Tank (only)
- ☐ 10. Engineered Disposal Field (only)
- ☐ 11. Pre-treatment, specify: _____
- ☐ 12. Miscellaneous Components

SIZE OF PROPERTY

1 ± SQ. FT. ☑ ACRES

SHORELAND ZONING

Yes ☑ No

DISPOSAL SYSTEM TO SERVE

- ~~1. Single Family Dwelling Unit~~, No. of Bedrooms: 5
- ☑ 2. Multiple Family Dwelling, No. of Units: 2
- ☐ 3. Other: _____ (specify)

Current Use: ☐ Seasonal ☑ Year Round ☐ Undeveloped

TYPE OF WATER SUPPLY

☑ 1. Drilled Well ☐ 2. Dug Well ☐ 3. Private
☐ 4. Public ☐ 5. Other

DESIGN DETAILS (SYSTEM LAYOUT SHOWN ON PAGE 3)

TREATMENT TANK

- ☑ 1. Concrete
  - ☑ a. Regular
  - ☐ b. Low Profile
- ☐ 2. Plastic
- ☐ 3. Other _____

CAPACITY: 1,250 GAL

DISPOSAL FIELD TYPE & SIZE

- ☑ 1. Stone Bed ☐ 2. Stone Trench
- ☐ 3. Proprietary Device
  - a. cluster array ☐ c. Linear
  - ☐ b. regular load d. H-20 load
- ☐ 4. Other _____

SIZE: 1,500 ☑ sq. ft. ☐ lin. ft.

GARBAGE DISPOSAL UNIT

☑ 1. No ☐ 2. Yes ☐ 3. Maybe

If Yes or Maybe, specify one below:

- ☐ a. multi-compartment tank
- ☐ b. ___ tanks in series
- ☐ c. increase in tank capacity
- ☐ d. Filter on Tank Outlet

DESIGN FLOW

450 gallons per day

BASED ON

- ☑ 1. Table 501.1 (dwelling unit(s))
- ☐ 2. Table 501.2 (other facilities)

SHOW CALCULATIONS

---- for other facilities ---

☐ 3. Section 503.0 (meter readings)

ATTACH WATER METER DATA

SOIL DATA & DESIGN CLASS

PROFILE	CONDITION	DESIGN
7	C	1

at Observation Hole # 1

Depth 16"

of Most Limiting Soil Factor

DISPOSAL FIELD SIZING

- 1. Small---2.0 sq. ft. / gpd
- 2. Medium---2.6 sq. ft. / gpd
- ☑ 3. Medium---Large 3.3 sq. ft. / gpd
- 4. Large---4.1 sq. ft. / gpd
- 5. Extra Large---5.0 sq. ft. / gpd

~~EFFLUENT/EJECTOR PUMP~~

- 1. Not Required
- ☑ 2. May Be Required
- ☐ 3. Required

Specify only for engineered systems:

DOSE: _____ gallons

SITE EVALUATOR STATEMENT

I certify that on 10/25/02 (date) I completed a site evaluation on this property and state that the data reported are accurate and that the proposed system is in compliance with the State of Maine Subsurface Wastewater Disposal Rules (10-144A CMR 241).

Site Evaluator Signature [signature] — SE # 256 — Date 10/26/02

Site Evaluator Name Printed: JOHN PHILBRICK

Note: Changes to or deviations from the design should be confirmed with the Site Evaluator.

SUBSURFACE WASTEWATER DISPOSAL SYSTEM APPLICATION

Department of Human Services
Division of Health Engineering
(207) 287-5672 FAX (207) 287-4172

Town, City, Plantation: AUGUSTA

Street, Road, Subdivision: S+V LANE

Owner's Name: NOEL LALIBERTY

SITE PLAN

Scale 1" = 50 Ft. or as shown

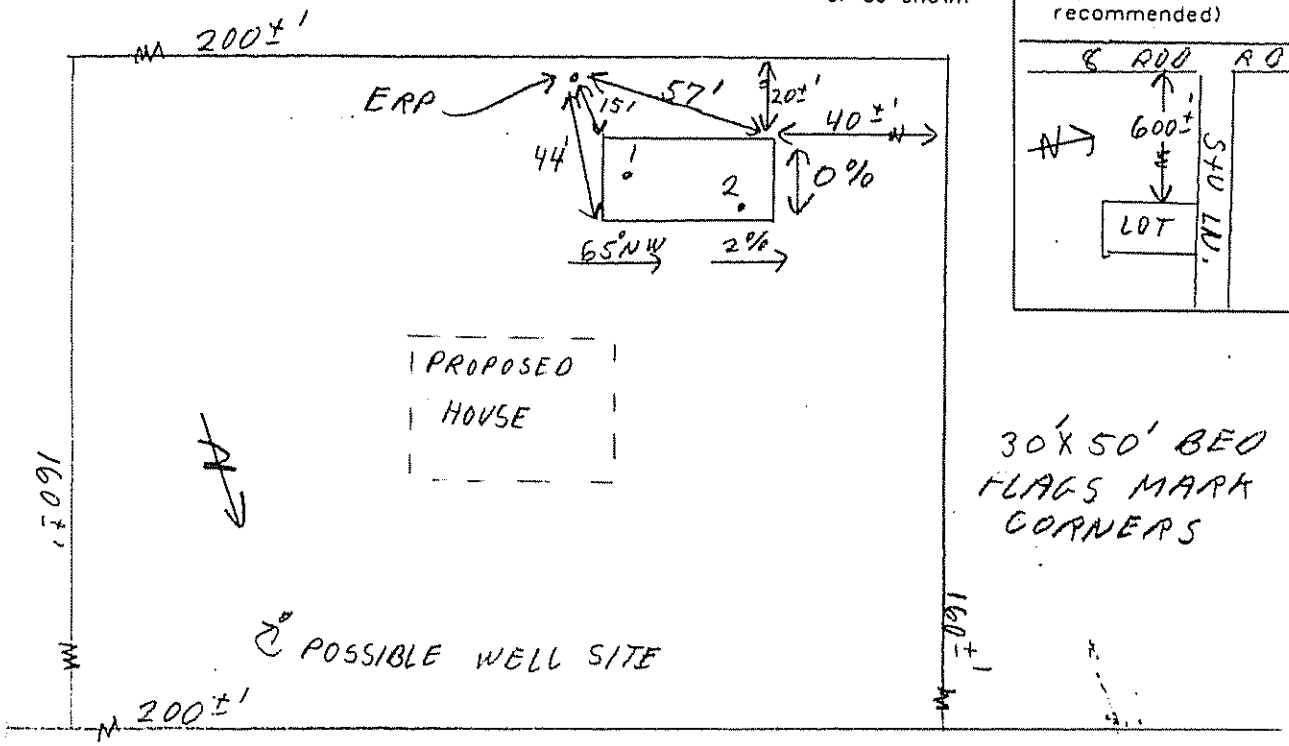

SITE LOCATION PLAN (Map from Maine Atlas recommended)

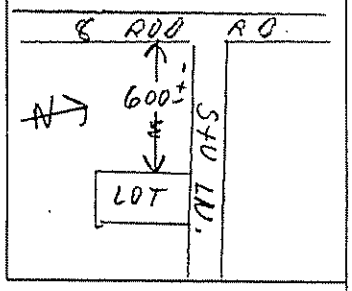

SOIL DESCRIPTION AND CLASSIFICATION (Location of Observation Holes Shown Above)

Observation Hole 1 ☑ Test Pit ☐ Boring

2± " Depth of Organic Horizon Above Mineral Soil

Depth below mineral soil surface (inches)	Texture	Consistency	Color	Mottling
0	SANDY LOAM	FRIABLE	DARK BR.	NONE
10	↓	↓	YELLOW BR.	↓
20	SILTY CLAY	FIRM	GRAY	COMMON DISTINCT
30	↓	↓	↓	↓
40				
50				

Soil Classification		Slope	Limiting Factor	
7 Profile	C Condition	2 %	16"	☑ Ground Water ☑ Restrictive Layer ☐ Bedrock ☐ Pit Depth

Observation Hole 2 ☑ Test Pit ☐ Boring

2± " Depth of Organic Horizon Above Mineral Soil

Depth below mineral soil surface (inches)	Texture	Consistency	Color	Mottling
0				
10				
20		SAME	AS #1	
30				
40				
50				

Soil Classification		Slope	Limiting Factor	
7 Profile	C Condition	2 %	16"	☑ Ground Water ☑ Restrictive Layer ☐ Bedrock ☐ Pit Depth

Site Evaluator Signature: [signature] SE # 256 Date: 10/26/02

SUBSURFACE WASTEWATER DISPOSAL SYSTEM APPLICATION

Maine Department of Human Services
Division of Health Engineering, Station 10
(207) 287-5672 FAX (207) 287-4172

Town, City, Plantation	Street, Road, Subdivision	Owner or Applicant Name
AUGUSTA	S+V LANE	NOEL LALIBERTE

SUBSURFACE WASTEWATER DISPOSAL PLAN

Scale: 1" = 20 ft.

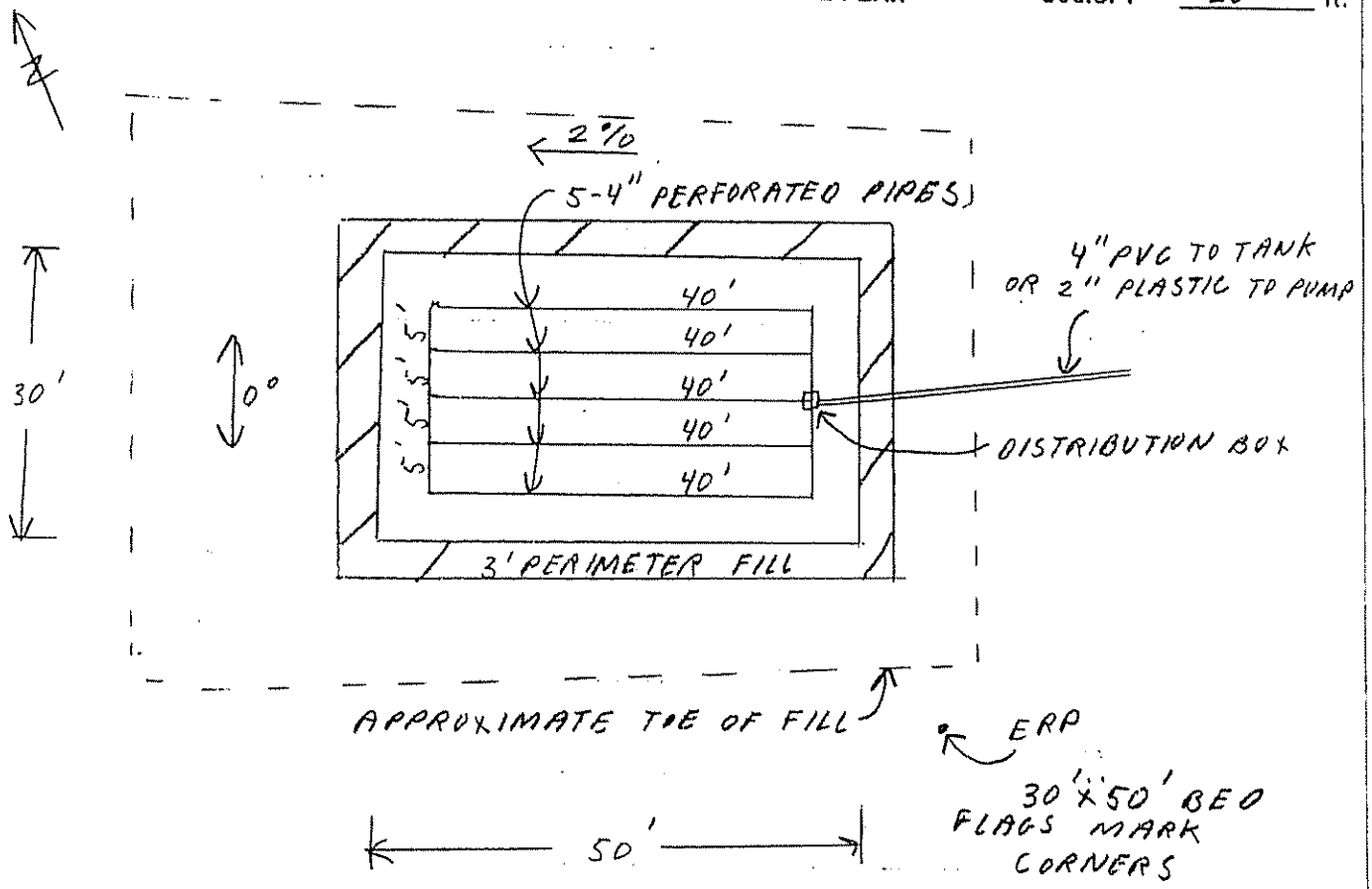

BACKFILL REQUIREMENTS		CONSTRUCTION ELEVATIONS		ELEVATION REFERENCE POINT
Depth of Backfill (upslope)	20"	Finished Grade Elevation	-35"	Location & Description: ERP IS IN 4"
Depth of Backfill (downslope)	34"	Top of Distribution Pipe or Proprietary Device	-43"	SPRUCE, 15' SOUTH OF SYS., 60"
DEPTHS AT CROSS-SECTION (shown below)		Bottom of Disposal Field	-54"	Reference Elevation is: 0.0" or: ABOVE GROUND

DISPOSAL FIELD CROSS-SECTION

Scales:
Vertical: 1" = 5 ft.
Horizontal: 1" = 10 ft.

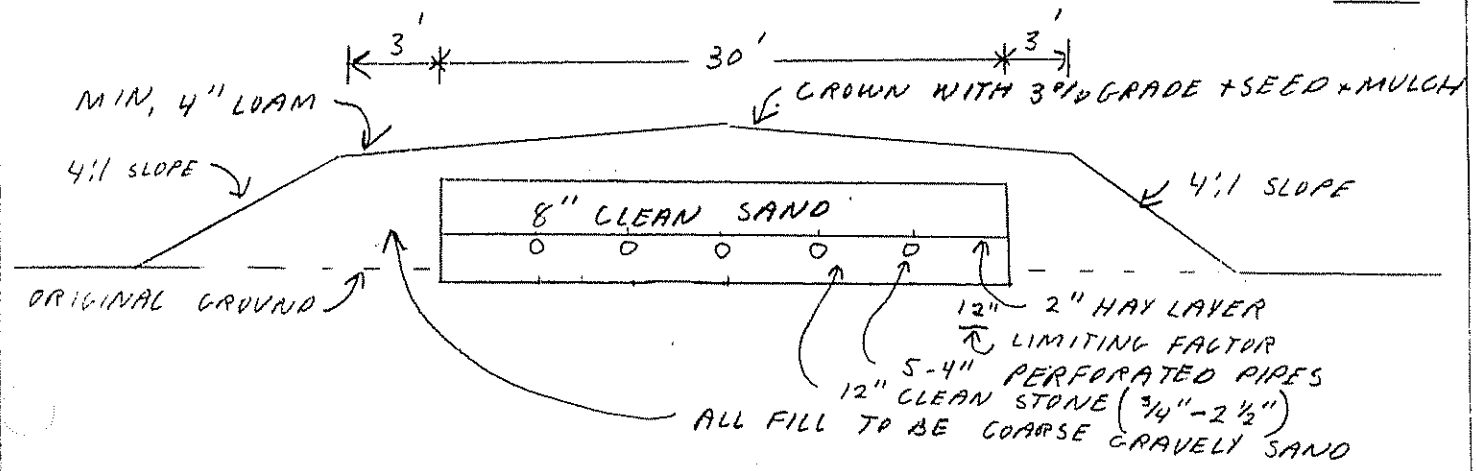

Site Evaluator Signature | SE # 256 | Date 10/26/02