SUBSURFACE WASTEWATER DISPOSAL SYSTEM APPLICATION

Maine Dept. Health & Human Services
Division of Health Engineering, 10 SHS
(207) 287-5672 Fax: (207) 287-3165

PROPERTY LOCATION

City, Town, or Plantation	AUGUSTA
Street or Road	NADEAU RD. (WRY)
Subdivision, Lot #	

OWNER/APPLICANT INFORMATION

Name (last, first, MI): NADEAU, LEO ☑ Owner ☑ Applicant

Mailing Address of Owner/Applicant: 265 MT. VERNON RD. AUGUSTA, ME. 04330

Daytime Tel. #: Z

OWNER OR APPLICANT STATEMENT

I state and acknowledge that the information submitted is correct to the best of my knowledge and understand that any falsification is reason for the Department and/or Local Plumbing Inspector to deny a Permit.

Signature of Owner or Applicant _____ Date _____

>> CAUTION: PERMIT REQUIRED - ATTACH IN SPACE BELOW <<

The Subsurface Wastewater Disposal System *shall not* be installed until a Permit is attached HERE by the Local Plumbing Inspector. The Permit shall authorize the owner or installer to install the disposal system in accordance with this application and the Maine Subsurface Wastewater Disposal Rules.

Municipal Tax Map # _____ Lot # _____

CAUTION: INSPECTION REQUIRED

I have inspected the installation authoirzed above and found it to be in compliance with the Subsurface Wastewater Disposal Rules Application.

(1st) date approved _____

Local Plumbing Inspector Signature _____ (2nd) date approved _____

PERMIT INFORMATION

TYPE OF APPLICATION

- ☑ 1. First Time System
- ☐ 2. Replacement System
  - Type replaced: _____
  - Year installed: _____
- ☐ 3. Expanded System
  - ☐ a. Minor Expansion
  - ☐ b. Major Expansion
- ☐ 4. Experimental System
- ☐ 5. Seasonal Conversion

THIS APPLICATION REQUIRES

- ☑ 1. No Rule Variance
- ☐ 2. First Time System Variance
  - ☐ a. Local Plumbing Inspector Approval
  - ☐ b. State & Local Plumbing Inspector Approval
- ☐ 3. Replacement System Variance
  - ☐ a. Local Plumbing Inspector Approval
  - ☐ b. State & Local Plumbing Inspector Approval
- ☐ 4. Minimum Lot Size Variance
- ☐ 5. Seasonal Conversion Permit

DISPOSAL SYSTEM COMPONENTS

- ☑ 1. Complete Non-engineered System
- ☐ 2. Primitive System (graywater & alt. toilet)
- ☐ 3. Alternative Toilet, specify: _____
- ☐ 4. Non-engineered Treatment Tank (only)
- ☐ 5. Holding Tank, _____ gallons
- ☐ 6. Non-engineered Disposal Field (only)
- ☐ 7. Separated Laundry System
- ☐ 8. Complete Engineered System (2000 gpd or more)
- ☐ 9. Engineered Treatment Tank (only)
- ☐ 10. Engineered Disposal Field (only)
- ☐ 11. Pre-treatment, specify: _____
- ☐ 12. Miscellaneous Components

SIZE OF PROPERTY

1.5± ☐ SQ. FT. ☑ ACRES

SHORELAND ZONING

☐ Yes ☑ No

DISPOSAL SYSTEM TO SERVE

- ☑ 1. Single Family Dwelling Unit, No. of Bedrooms: 3
- ☐ 2. Multiple Family Dwelling, No. of Units: _____
- ☐ 3. Other: _____ (specify)

Current Use ☐ Seasonal ☑ Year Round ☐ Undeveloped

TYPE OF WATER SUPPLY

☑ 1. Drilled Well ☐ 2. Dug Well ☐ 3. Private ☐ 4. Public ☐ 5. Other

DESIGN DETAILS (SYSTEM LAYOUT SHOWN ON PAGE 3)

TREATMENT TANK

- ☑ 1. Concrete
  - ☑ a. Regular
  - ☐ b. Low Profile
- ☐ 2. Plastic
- ☐ 3. Other: _____

CAPACITY: 1,000 GAL.

DISPOSAL FIELD TYPE & SIZE

- ☑ 1. Stone Bed ☐ 2. Stone Trench
- ☐ 3. Proprietary Device
  - ☐ a. cluster array ☐ c. Linear
  - ☐ b. regular load ☐ d. H-20 load
- ☐ 4. Other: _____

SIZE: 900 ☑ sq. ft. ☐ lin. ft.

GARBAGE DISPOSAL UNIT

☑ 1. No ☐ 2. Yes ☐ 3. Maybe

If Yes or Maybe, specify one below:

- ☐ a. multi-compartment tank
- ☐ b. ___ tanks in series
- ☐ c. increase in tank capacity
- ☐ d. Filter on Tank Outlet

DESIGN FLOW

270 gallons per day

BASED ON:

- ☑ 1. Table 501.1 (dwelling unit(s))
- ☐ 2. Table 501.2 (other facilities)

SHOW CALCULATIONS for other facilites

☐ 3. Section 503.0 (meter readings)

ATTACH WATER METER DATA

SOIL DATA & DESIGN CLASS

PROFILE	CONDITION	DESIGN
7	C	1

at Observation Hole # 1

Depth 16"

of Most Limiting Soil Factor

DISPOSAL FIELD SIZING

- ☐ 1. Small—2.0 sq. ft. / gpd
- ☐ 2. Medium—2.6 sq. ft. / gpd
- ☑ 3. Medium—Large 3.3 sq. f.t / gpd
- ☐ 4. Large—4.1 sq. ft. / gpd
- ☐ 5. Extra Large—5.0 sq. ft. / gpd

EFFLUENT/EJECTOR PUMP

- ☐ 1. Not Required
- ☑ 2. May Be Required
- ☐ 3. Required

Specify only for engineered systems:

DOSE: _____ gallons

LATITUDE AND LONGITUDE

at center of disposal area

Lat. 44 d 21 m 605 s

Lon. 69 d 49 m 074 s

if g.p.s, state margin of error: 19

SITE EVALUATOR STATEMENT

I certify that on 10/29/07 (date) I completed a site evaluation on this property and state that the data reported are accurate and that the proposed system is in compliance with the State of Maine Subsurface Wastewater Disposal Rules (10-144A CMR 241).

Site Evaluator Signature _____ SE # 256 Date 11/1/07

Site Evaluator Name Printed: JOHN PHILBRICK

Telephone Number: 547-3732

E-mail Address: _____

Note: Changes to or deviations from the design should be confirmed with the Site Evaluator.

SUBSURFACE WASTEWATER DISPOSAL SYSTEM APPLICATION

01040604

Town, City, Plantation: AUGUSTA

Street, Road, Subdivision: NADEAU RD.

Owner's Name: LEO NADEAU

SITE PLAN

Scale: 1" = _____ Ft. or as shown

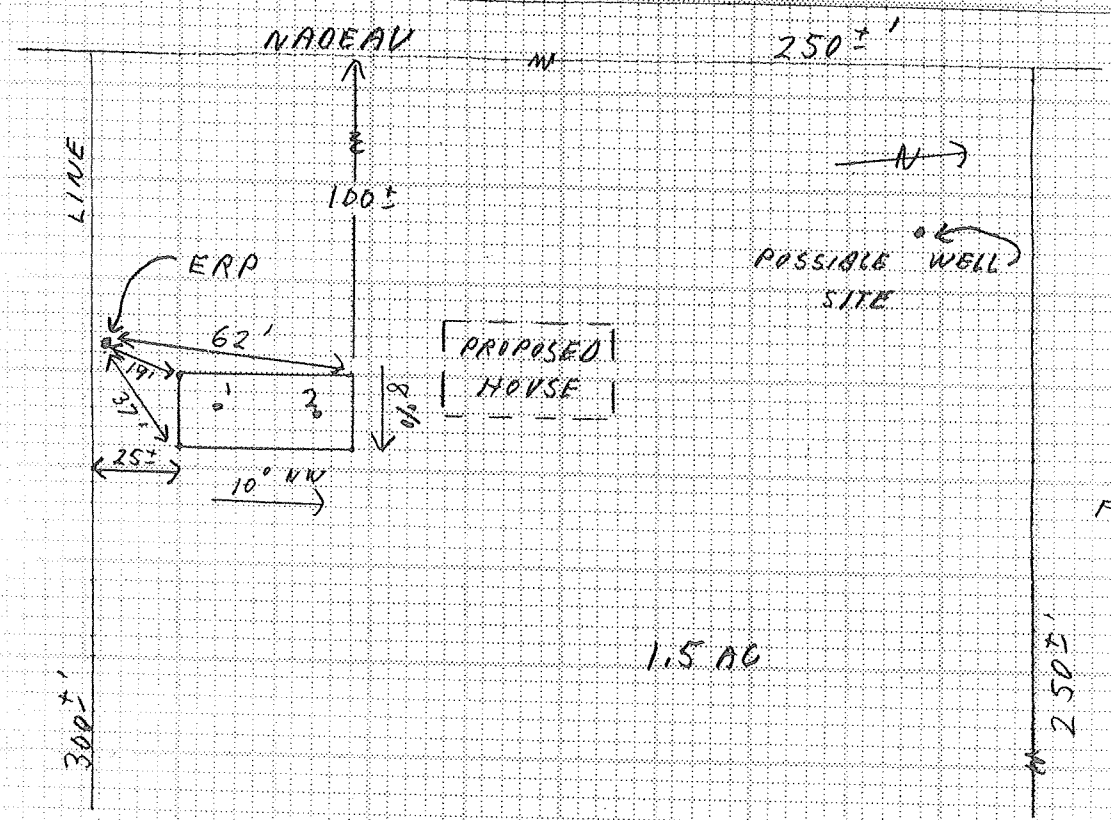

SITE LOCATION PLAN
(Attach Map from Maine Atlas for New System Variance)

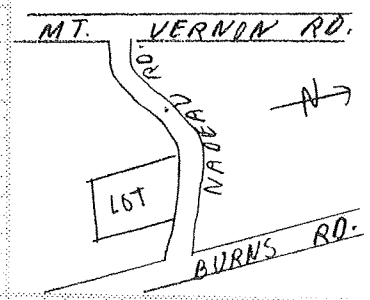

20'X45' BED
FLAGS MARK CORNERS

SOIL DESCRIPTION AND CLASSIFICATION

(Location of Observation Holes Shown Above)

Observation Hole 1 — ☑ Test Pit ☐ Boring

0" Depth of Organic Horizon Above Mineral Soil

Inches	Texture	Consistency	Color	Mottling
0–6	SANDY LOAM	FRIABLE	D-BR.	NONE
6–10	LOAMY		YELLOW	
10–15	SAND			
15–20	FINE SILTY	FIRM	GRAY	COMMON
20–50	CLAY			DISTINCT

Soil Profile: 7 — Classification Condition: 6 — Slope: 8 % — Limiting Factor: 16" — ☑ Ground Water ☑ Restr. Layer ☐ Bedrock

Observation Hole 2 — ☑ Test Pit ☐ Boring

0" Depth of Organic Horizon Above Mineral Soil

Inches	Texture	Consistency	Color	Mottling
0–50	SAME AS #1			

Soil Profile: 7 — Classification Condition: 6 — Slope: 8 % — Limiting Factor: 16" — ☑ Ground Water ☑ Restr. Layer ☐ Bedrock

Site Evaluator Signature

256
SE#

11/1/07
Date

Approved for use as HHE 200 by Division of Health Engineering 9/87

SUBSURFACE WASTEWATER DISPOSAL SYSTEM APPLICATION

08246445

Town, City, Plantation	Street, Road, Subdivision	Owner's Name
AUGUSTA	NADEAU RD.	LEO NADEAU

SUBSURFACE WASTEWATER DISPOSAL PLAN

Scale: 1" = 20 ft. or as shown

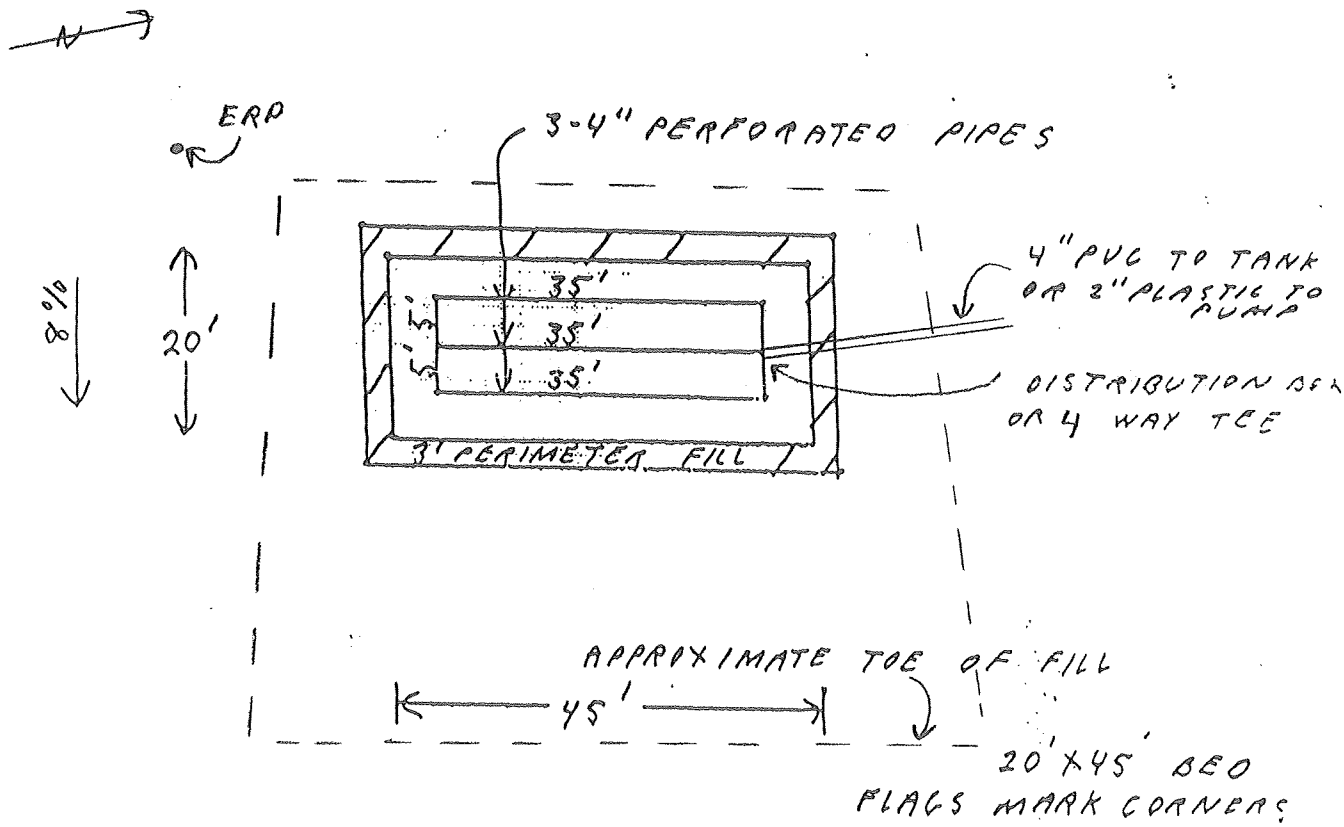

FILL REQUIREMENTS

Depth of Fill (Upslope) 20"

Depth of Fill (Downslope) 39"

CONSTRUCTION ELEVATION

Reference Elevation is 0"

Bottom of Disposal Area -60"

Top of Distribution Lines or Chambers -49"

ELEVATION REFERENCE POINT

ERP IS TOP OF SET POST 19' S/W OF SYSTEM, 40" ABOVE GROUND

DISPOSAL AREA CROSS SECTION

Scale:

Vertical: 1 inch = 5 ft.

Horizontal: 1 inch = 10 ft.

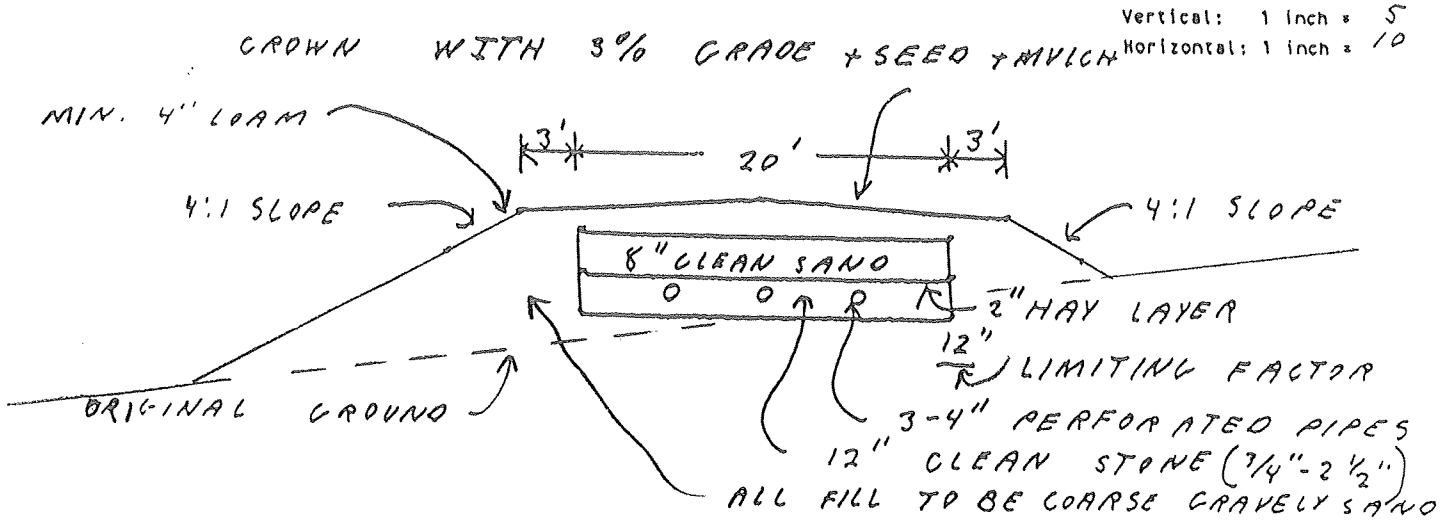

Site Evaluator Signature

256
SE#

11/1/07
Date

Approved for use as HHE 200 by Division of Health Engineering 9/87

280'
156'
1
2
3
4
Home 2 Yrs
NADEAU STREET
ake to abutter

Homestead
3
4
5
MT VERNON ROAD

652-0966

SYNOPSIS OF LOTTING

LOT	AREA	REMARKS
1	20,431 sf	Sale to relative
2	23,726	Sale to relative
3	49,598	Sale to relative
4	11,731	Sale to abutter
5	87,787	Sale to Public
6	67,999	Sale to relative - 3800 = 64,199
7	57,944	Sale to relative
8	34,295	Sale to relative
9	32,419	Reserved (currently)
10	7,477	Add to Residence
11	54,157	Reserved (current)y)

WARNING:
Well on Lot 4 requires easement to service Lot 3.

CURVE TABLE

CURVE	ARC LENGTH	DELTA	RADIUS	TANGENT	CHORD
C1	150.8	69°-07'	125.0	86.1	141.8
C2	216.4	70°-52'	175.0	124.5	202.9
C3	154.5	70°-52'	125.0	88.9	144.9
C4	211.1	69°-07'	175.0	120.5	198.5

REFERENCES
See plan by this surveyor which shows the conveyance of Parcel 1 (Book 3662-p.303) and Parcel 2 (Book 3662-p.306), dated 11/06/89. Other conveyances to this owner are found in Books 1729-p.234 (between Dubord & Veilleux), and 2916-p.99 (Lots 1, 3, 4, and David Nadeau). It should be noted that Lot 1 contains a small portion of Parcel 2.

LEGEND
- VEGETATION
- TEST PIT
- DECIDUOUS TREE
- UTILITY POLE
- TRAVERSE POINT
- IRON PIN SET
- IRON PIN FND.

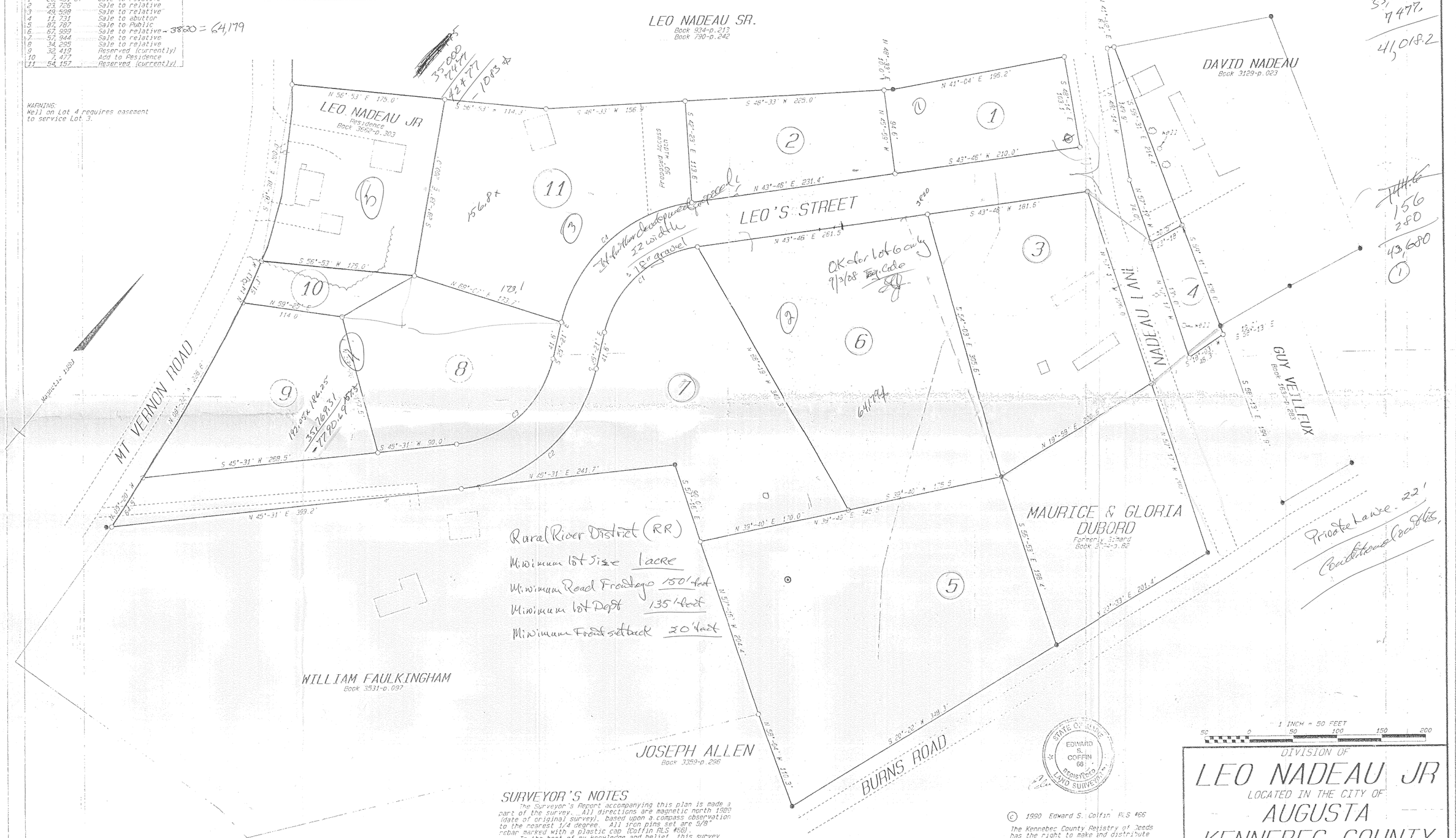

SURVEYOR'S NOTES

The Surveyor's Report accompanying this plan is made a part of the survey. All directions are magnetic north 1989 (date of original survey), based upon a compass observation to the nearest 1/4 degree. All iron pins set are 5/8" rebar marked with a plastic cap (Coffin PLS #66).

To the best of my knowledge and belief, this survey conforms to the Maine Board of Registration for Surveyor Standards, with the exception that deed descriptions were not furnished for the lots--Standard Boundary Survey (Category I)--Condition II.

The owner of this division reserves the right to modify boundaries, or rights of way, on any remaining property held by the owner within the division.

NOT A SUBDIVISION
(Only one lot offered to public)

STATE OF MAINE
EDWARD S. COFFIN
66
REGISTERED
LAND SURVEYOR

© 1990 Edward S. Coffin PLS #66

The Kennebec County Registry of Deeds has the right to make and distribute copies of this plan, if recorded.

No warranty is made to other parties using this plan for deed descriptions, further divisions, etc.

DIVISION OF
LEO NADEAU JR
LOCATED IN THE CITY OF
AUGUSTA
KENNEBEC COUNTY

COFFIN ENGINEERING & SURVEYING 623-9475
SHEET 1 OF 1 AUGUSTA, ME JUNE 25, 1990