SUBSURFACE WASTEWATER DISPOSAL SYSTEM APPLICATION

Department of Human Services
Division of Health Engineering
(207)287-5672 FAX (207)287-4172

AUGUSTA 3814 TOWN COPY

Date Permit Issued: 11/5/97 $ 45.00 FEE ☐ If Double Fee Charged

Local Plumbing Inspector Signature L.P.I. # 850

PROPERTY LOCATION

Town or Plantation	AUGUSTA
at Subdivision Lot #	MOUNT VERNON ROAD

PROPERTY OWNERS NAME

Last: FAULKINGHAM First: WILLIAM

Mailing Address of Owner	RR 5 BOX 1270
	AUGUSTA, ME 04330
Daytime Tel. #	626-5800

Municipal Tax Map # 5 Lot Page # 189

Owner Statement

I state that the information submitted is correct to the best of my knowledge and understand that any falsification is reason for the Department and/or Local Plumbing Inspector to deny a Permit.

Signature of Owner/Applicant Date

Caution: Inspection Required

I have inspected the installation authorized above and found it to be in compliance with the Subsurface Wastewater Disposal Rules Application.

Local Plumbing Inspector Signature Date Approved

PERMIT INFORMATION

THIS APPLICATION IS FOR:

1. ☐ First Time System
2. ☐ Multi-User System
3. ■ Replacement System
4. ☐ Expanded System
   a. ☐ One-time exempted
   b. ☐ Non-exempted
5. ☐ Experimental System
6. ☐ Seasonal Conversion

THIS APPLICATION REQUIRES:

1. ■ No Rule Variance
2. ☐ First Time System Variance (Municipal)
3. ☐ First Time System Variance (State)
4. ☐ Replacement System Variance
   a. ☐ Local Plumbing Inspector approval
   b. ☐ State & Local Plumbing Inspector approval
5. ☐ Minimum Lot Size Variance
6. ☐ Seasonal Conversion Variance

DISPOSAL SYSTEM COMPONENT(S):

1. ☐ Non-Engineered System
2. ☐ Primitive System
3. ☐ Alternative Toilet specify
4. ☐ Non-Engineered Treatment Tank
5. ☐ Holding Tank Gallons
6. ■ Non- Engineered Disposal Area
7. ☐ Separated Laundry System
8. ☐ Engineered System (+2000 gpd)
9. ☐ Engineered Treatment Tank (only)
10. ☐ Engineered Disposal Area (only)

SIZE OF PROPERTY

5.5 ACRES

SHORELAND ZONING

☐ Yes ■ No

DISPOSAL SYSTEM TO SERVE:

1. ■ Single Family Dwelling Unit
2. ☐ Multiple Family Dwelling Unit
   Number of Units
3. ☐ OTHER SPECIFY

TYPE OF WATER SUPPLY

EXISTING DRILLED WELL

DESIGN DETAILS (SYSTEM LAYOUT SHOWN ON PAGE 3)

TREATMENT TANK

1. ■ Concrete
   ■ Regular
   ☐ Low Profile
2. ☐ Plastic EXISTING

SIZE: 1000 Gallons

DISPOSAL AREA TYPE/SIZE

1. ■ Stone Bed 1400 Sq. Ft.
2. ☐ Proprietary Device Sq. Ft.
   ☐ Clustered ☐ Linear
   ☐ Regular ☐ H-20
3. ☐ Trench Lin. Ft.
4. ☐ Other

GARBAGE DISPOSAL UNIT

1. ■ No
2. ☐ Yes
   ☐ Multi-compartment Tank
   ☐ Tank in Series
   ☐ Increase in tank capacity
   ☐ Filter on Tank Outlet RECOMMENDED

CRITERIA USED FOR DESIGN FLOW (Show Calculations)

3 BEDROOM

PROFILE & DESIGN CLASS

PROFILE	DESIGN
9	D

DEPTH TO MOST LIMITING FACTOR 12 "

DISPOSAL AREA SIZING

1. ☐ Small 2.0
2. ☐ Medium 2.60
3. ☐ Medium-Large 3.30
4. ☐ Large 4.10
5. ■ Extra-Large 5.00

PUMPING

1. ■ Not Required
2. ☐ May Be Required
3. ☐ Required

DOSE Gallons

DESIGN FLOW: 270 (Gallons/Day)

SITE EVALUATOR'S STATEMENT

On 8 / 25 / 97 (date) I completed a site evaluation on this property and state that the data reported is accurate and that the proposed system is in compliance with the Subsurface Wastewater Disposal Rules.

Site Evaluator Signature	188 SE#	8/26/97 Date
WILLIAM P BROWN Print Name	293-2110 Telephone	

SUBSURFACE WASTEWATER DISPOSAL SYSTEM APPLICATION

Department of Human Services
Division of Health Engineering

Town, City, Plantation	Street, Road, Subdivision	Owners Name
AUGUSTA	MOUNT VERNON ROAD	WILLIAM FAULKINGHAM

SITE PLAN — Scale 1" = 100 Ft.

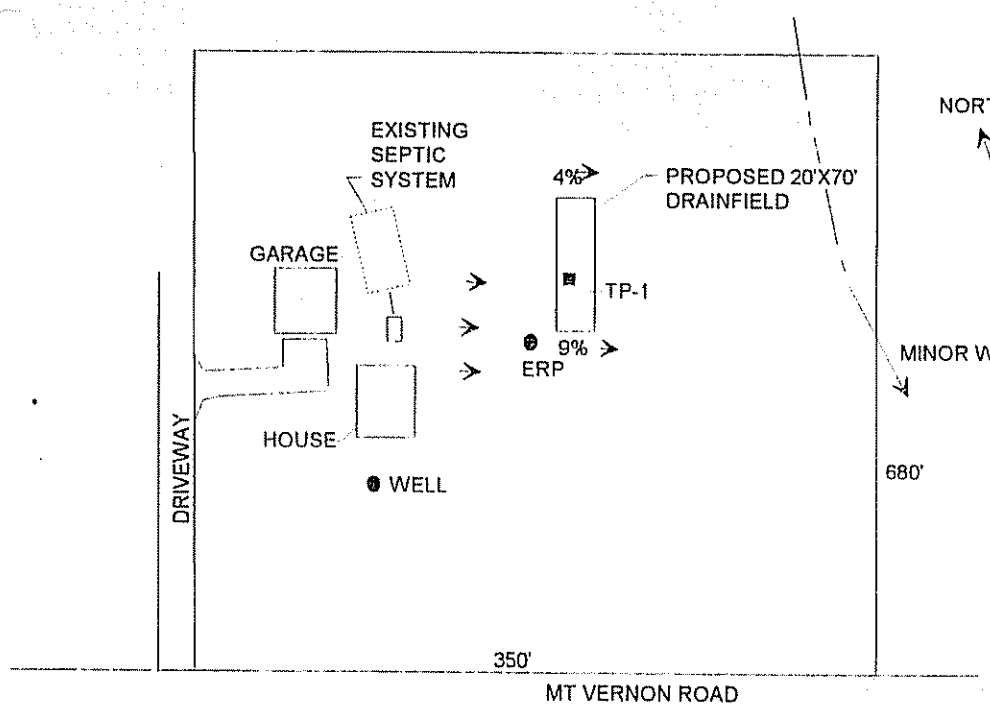

SITE LOCATION PLAN (Attach Map from Maine Atlas for New System Variance)

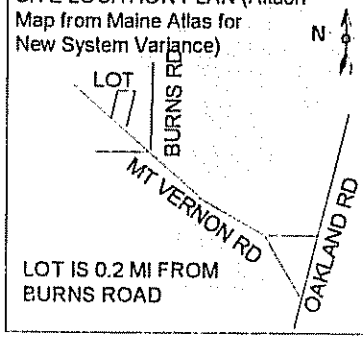

THE EXISTING SYSTEM APPEARS TO BE FUNCTIONING PROPERLY HOWEVER, SINCE THE GARAGE IS TO BE RE-LOCATED OVER A PORTION OF THE EXISTING SYSTEM, A NEW SYSTEM WILL BE NEEDED

THE EXISTING SEPTIC TANK WILL ALSO BE RE-LOCATED NEAR THE BACK OF THE HOUSE AT A LOWER ELEVATION, AT LEAST 75 FEET FROM THE EXISTING WELL, TO ALLOW FOR GRAVITY FLOW FROM THE BASEMENT FACILITIES

SOIL DESCRIPTION AND CLASSIFICATION (Location of Observation Holes Shown Above)

Observation Hole TP-1 ■ Test Pit ☐ Boring

0 " Depth of Organic Horizon Above Mineral Soil

DEPTH BELOW MINERAL SOIL SURFACE (Inches): 0, 6, 10, 15, 20, 30, 40, 50

Texture	Consistancy	Color	Mottling
SILT LOAM	FRIABLE	MEDIUM BROWN	NONE
SILT CLAY LOAM	FIRM	OLIVE BRN	COMMON

Soil Profile	Classification Condition	Slope	Limiting Factor	
9	D	4-9 %	12 "	■ Ground Water ☐ Restrictive Layer ☐ Bedrock

Observation Hole _____ ☐ Test Pit ☐ Boring

" Depth of Organic Horizon Above Mineral Soil

DEPTH BELOW MINERAL SOIL SURFACE (Inches): 0, 6, 10, 15, 20, 30, 40, 50

Texture	Consistancy	Color	Mottling

Soil Profile	Classification Condition	Slope	Limiting Factor	
		%	"	☐ Ground Water ☐ Restrictive Layer ☐ Bedrock

WILLIAM P BROWN — Site Evaluator Signature

188 — SE #

8/26/97 — Date

HHE-200 Rev. 1/84

SUBSURFACE WASTEWATER DISPOSAL SYSTEM APPLICATION

Department of Human Services
Division of Health Engineering

Town, City, Plantation	Street, Road, Subdivision	Owners Name
AUGUSTA	MOUNT VERNON ROAD	WILLIAM FAULKINGHAM

SUBSURFACE WASTEWATER DISPOSAL PLAN

Scale 1" 20' Ft.

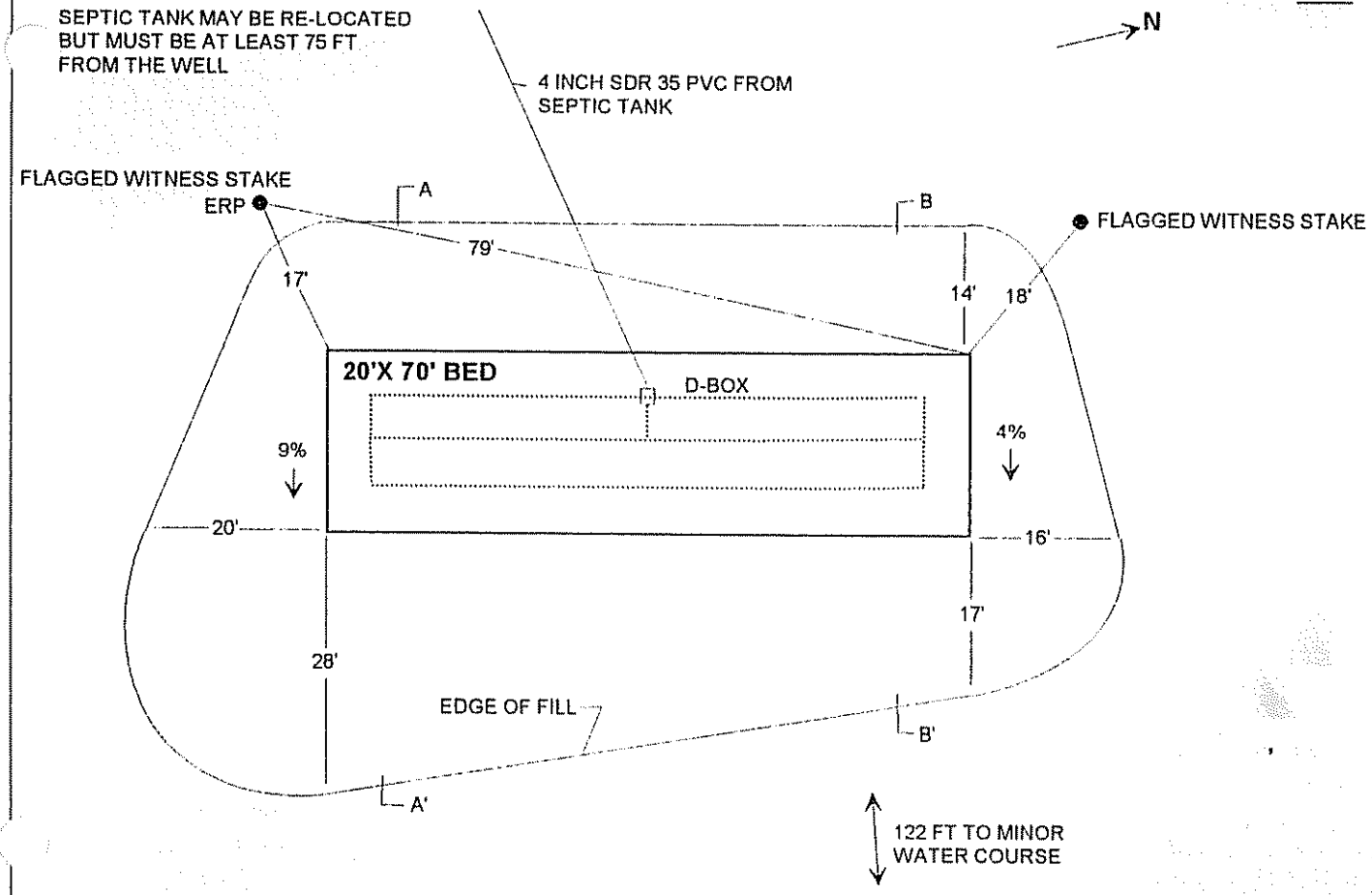

FILL REQUIREMENTS		CONSTRUCTION ELEVATIONS		ELEVATION REFERENCE POINT LOCATION & DESCRIPTION
Depth of Fill (Upslope)	30-32 "	Reference Elevation is	00"	TOP OF FLAGGED WITNESS STAKE,
Depth of Fill (Downslope)	41-51 "	Bottom of Disposal Area	-57"	3 FEET ABOVE GROUND
		Top of distribution Lines or Chambers	-46"	

DISPOSAL AREA CROSS SECTION

Scale:

Vertical: 1 inch = 5 Ft.
Horizontal: 1 inch = 10 Ft.

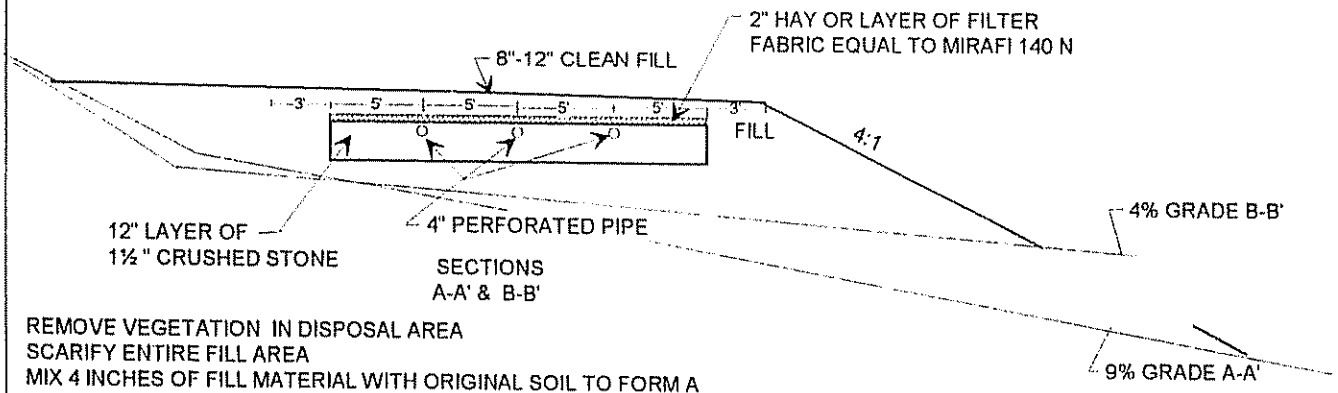

REMOVE VEGETATION IN DISPOSAL AREA
SCARIFY ENTIRE FILL AREA
MIX 4 INCHES OF FILL MATERIAL WITH ORIGINAL SOIL TO FORM A TRANSITION ZONE (ACCORDING TO CHAPTER 12, PLUMBING CODE)
ALL FILL SHALL BE GRAVELLY COARSE SAND
CROWN FINISH GRADE FROM CENTER AT 3%
OR SLOPE ALL ONE-WAY (AS SHOWN)
LOAM, SEED, MULCH DISTURBED AREAS

WILLIAM P BROWN	188	8/26/97
Site Evaluator Signature	SE #	Date