SUBSURFACE WASTEWATER DISPOSAL SYSTEM APPLICATION

Department of Human Services
Division of Health Engineering
(207) 289-3826

M 5 L 177

AUGUSTA PERMIT # 281 STATE COPY

Date Permit Issued: 8 2 84 $ 40 FEE ☐ If Double Fee Charged

Robert St Pierre
Local Plumbing Inspector Signature

L.P.I. # 1617

PROPERTY ADDRESS

Town Or Plantation	Augusta
Street Subdivision Lot #	Mt. Vernon Road

PROPERTY OWNERS NAME

Last: Bizzell First: Avon

Applicant Name:	R.F.D. 4
Mailing Address of Owner/Applicant (If Different)	Augusta, Maine 04330

Owner/Applicant Statement

I certify that the information submitted is correct to the best of my knowledge and understand that any falsification is reason for the Local Plumbing Inspector to deny a Permit.

Avon St. Bizzell Jr.
Signature of Owner/Applicant — Date

Caution: Inspection Required

I have inspected the installation authorized above and found it to be in compliance with the Subsurface Wastewater Disposal Rules.

Local Plumbing Inspector Signature — Date Approved

PERMIT INFORMATION

THIS APPLICATION IS FOR:

1. ☑ NEW SYSTEM
2. ☐ REPLACEMENT SYSTEM
3. ☐ EXPANDED SYSTEM
4. ☐ SEASONAL CONVERSION
5. ☐ EXPERIMENTAL SYSTEM

THIS APPLICATION REQUIRES:

1. ☑ NO RULE VARIANCE REQUIRED
2. ☐ NEW SYSTEM VARIANCE Attach New System Variance Form
   ☐ REPLACEMENT SYSTEM VARIANCE Attach Replacement System Variance Form
3. ☐ Requiring Local Plumbing Inspector Approval
4. ☐ Requires State and Local Plumbing Inspector Approval

INSTALLATION IS:

COMPLETE SYSTEM

1. ☑ NON-ENGINEERED SYSTEM
2. ☐ PRIMITIVE SYSTEM (Includes Alternative Toilet)
3. ☐ ENGINEERED (+2000 gpd)

INDIVIDUALLY INSTALLED COMPONENTS:

4. ☐ TREATMENT TANK (ONLY)
5. ☐ HOLDING TANK
6. ☐ ALTERNATIVE TOILET (ONLY)
7. ☐ NON-ENGINEERED DISPOSAL AREA (ONLY)
8. ☐ ENGINEERED DISPOSAL AREA (ONLY)
9. ☐ SEPARATED LAUNDRY SYSTEM

IF REPLACEMENT SYSTEM:

YEAR FAILING SYSTEM INSTALLED _____

THE FAILING SYSTEM IS: N/A

1. ☐ BED 3. ☐ TRENCH
2. ☐ CHAMBER 4. ☐ OTHER: _____

DISPOSAL SYSTEM TO SERVE:

1. ☐ SINGLE FAMILY DWELLING
2. ☑ MODULAR OR MOBILE HOME
3. ☐ MULTIPLE FAMILY DWELLING
4. ☐ OTHER _____ SPECIFY

SIZE OF PROPERTY: 3± Ac.

ZONING: Residential

TYPE OF WATER SUPPLY: Drilled well

DESIGN DETAILS (SYSTEM LAYOUT SHOWN ON PAGE 3)

TREATMENT TANK

1. ☒ SEPTIC: ☒ Regular ☐ Low Profile
2. ☐ AEROBIC

SIZE: 1000 GALS.

WATER CONSERVATION

1. ☒ NONE
2. ☐ LOW VOLUME TOILET
3. ☐ SEPARATED LAUNDRY SYSTEM
4. ☐ ALTERNATIVE TOILET

SPECIFY: _____

PUMPING

1. ☒ NOT REQUIRED
2. ☐ MAY BE REQUIRED (DEPENDING ON TREATMENT TANK LOCATION AND ELEVATION)
3. ☐ REQUIRED

DOSE: _____ GALS.

CRITERIA USED FOR DESIGN FLOW (BEDROOMS, SEATING, EMPLOYEES, WATER RECORDS, ETC.)

2- Bedroom

DESIGN FLOW: 240 (GALLONS/DAY)

SOIL CONDITIONS USED FOR DESIGN PURPOSES

PROFILE	CONDITION
8	C

DEPTH TO LIMITING FACTOR: 24

SIZE RATINGS USED FOR DESIGN PURPOSES

1. ☐ SMALL
2. ☐ MEDIUM
3. ☐ MEDIUM-LARGE
4. ☒ LARGE
5. ☐ EXTRA LARGE

DISPOSAL AREA TYPE/SIZE

1. ☒ BED 1000 Sq. Ft.
2. ☐ CHAMBER _____ Sq. Ft.
   ☐ REGULAR ☐ H-20
3. ☐ TRENCH _____ Linear Ft.
4. ☐ OTHER: _____

20 X 50

TE EVALUATOR STATEMENT

☐ SITE EVALUATION WAIVED BY LOCAL OPTION)

On July 18, 1984 (date) I conducted a site evaluation for this project and certify that the data reported is accurate. The system proposed is in accordance with the Subsurface Wastewater Disposal Rules.

Stephen E. Goodenow
Site Evaluator Signature

65
SE#

City

7/27/84
Date

* Local Plumbing Inspectors Signature if a Local Site Evaluation Waiver under a Local Option

SUBSURFACE WASTEWATER DISPOSAL SYSTEM APPLICATION

Department of Human Services
Division of Health Engineering

Town, City, Plantation: Augusta

Street, Road, Subdivision: Mt. Vernon Road

Owners Name: Buzzell

SITE PLAN

Scale 1" = 50 Ft.

SITE LOCATION PLAN (Attach Map from Maine Atlas for New System Variance)

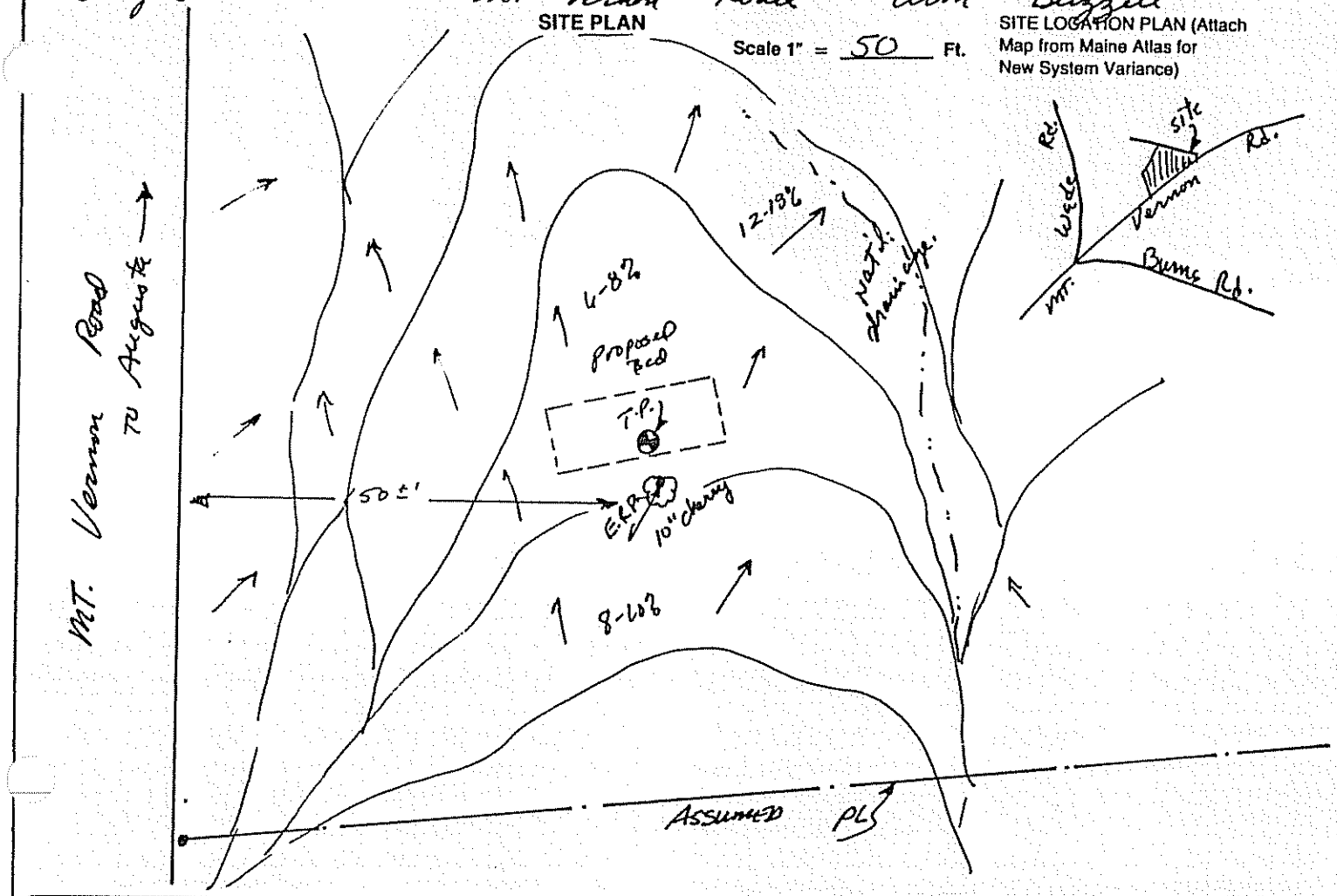

SOIL DESCRIPTION AND CLASSIFICATION (Location of Observation Holes Shown Above)

Observation Hole _____ ☒ Test Pit ☐ Boring

0 " Depth of Organic Horizon Above Mineral Soil

DEPTH BELOW MINERAL SOIL SURFACE (Inches)

Texture	Consistency	Color	Mottling
loam		Brown	
fine sand to	friable	Yellowish Brown	
silt loam	S.W. firm	olive gray	

Soil	Classification	Slope	Limiting Factor	
8 (Profile)	C (Condition)	6-8 %	24"	☒ Ground Water ☒ Restrictive Layer ☐ Bedrock

Observation Hole _____ ☐ Test Pit ☐ Boring

_____ " Depth of Organic Horizon Above Mineral Soil

DEPTH BELOW MINERAL SOIL SURFACE (Inches)

Texture	Consistency	Color	Mottling

Soil	Classification	Slope	Limiting Factor	
(Profile)	(Condition)	%	"	☐ Ground Water ☐ Restrictive Layer ☐ Bedrock

Stephen E. Goodwin
Site Evaluator Signature

65
SE#

7/27/84
Date

SUBSURFACE WASTEWATER DISPOSAL SYSTEM APPLICATION

Department of Human Services
Division of Health Engineering

Town, City, Plantation: Augusta

Street, Road, Subdivision: Mt. Vernon Road

Owners Name: Avon Buzzell

SUBSURFACE WASTEWATER DISPOSAL PLAN

Scale 1" = 30 Ft.

NOTE:
Well must be 100' from Bed
75' " Tank.

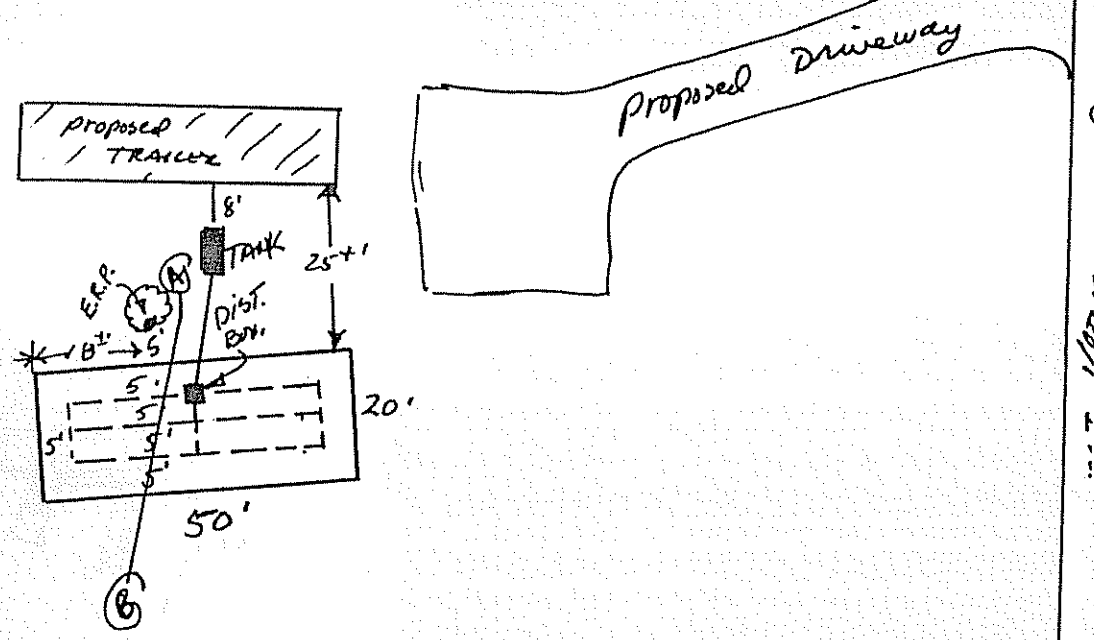

FILL REQUIREMENTS		CONSTRUCTION ELEVATIONS		ELEVATION REFERENCE POINT LOCATION & DESCRIPTION
Depth of Fill (Upslope)	12"	Reference Elevation is	ground @ Base	Ground @ Base of Cherry tree
Depth of Fill (Downslope)	36"	Bottom of Disposal Area	24" Below	finished grade level with gro
		Top of Distribution Lines or Chambers	12" "	

DISPOSAL AREA CROSS SECTION

Scale:

Vertical: 1 Inch = 5 Ft.

Horizontal: 1 Inch = 5 Ft.

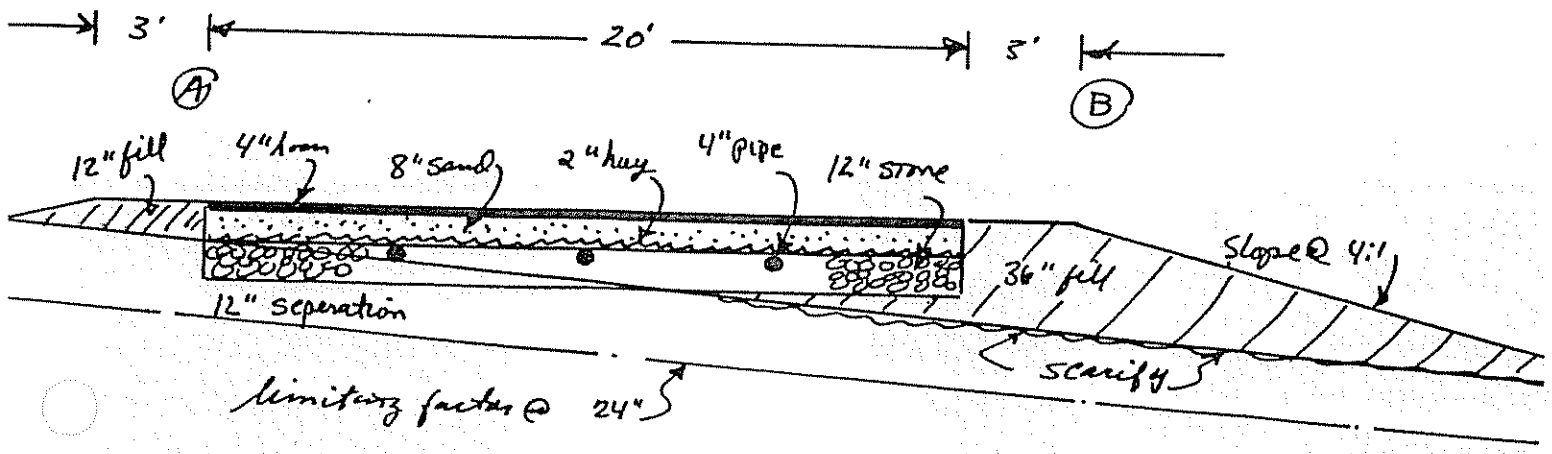

Stephen E. Goodwin
Site Evaluator Signature

65
SE#

7/27/84
Date

HHE-200 Rev.1/84