SUBSURFACE WASTEWATER DISPOSAL SYSTEM APPLICATION

Maine Dept. Health & Human Servi
Division of Health Engineering, 10 S
(207) 287-5672 Fax: (207) 287-31

PROPERTY LOCATION

>> CAUTION: PERMIT REQUIRED - ATTACH IN SPACE BELOW <<

City, Town, or Plantation	AUGUSTA
Street or Road	249 OLD BELGRADE RD
Subdivision, Lot #	GREYHOUND VETERINARY CLINIC

AUGUSTA PERMIT # 6039 TOWN COPY

Date Permit Issued 9/4/07 $ 100 ☐ If Double Fee Charged

Local Plumbing Inspector Signature L.P.I. # 850

OWNER/APPLICANT INFORMATION

Name (last, first, MI) BRUNS, SCOTT ☐ Owner ☒ Applicant

Mailing Address of Owner/Applicant	249 OLD BELGRADE RD AUGUSTA, ME 04330
Daytime Tel. #	626-2893

Municipal Tax Map # 5 Lot # 27

OWNER OR APPLICANT STATEMENT

I state and acknowledge that the information submitted is correct to the best of my knowledge and understand that any falsification is reason for the Department and/or Local Plumbing Inspector to deny a Permit.

Scott Bruns 9-4-07
Signature of Owner or Applicant Date

CAUTION: INSPECTION REQUIRED

I have inspected the installation authorized above and found it to be in compliance with the Subsurface Wastewater Disposal Rules Application.

Local Plumbing Inspector Signature (1st) date approved 9/13/07 (2nd) date approved

PERMIT INFORMATION

TYPE OF APPLICATION

- ☒ 1. First Time System
- ☐ 2. Replacement System
  - Type replaced: _____
  - Year Installed: _____
- ☐ 3. Expansion System
  - ☐ a. Minor Expansion
  - ☐ b. Major Expansion
- ☐ 4. Experimental System
- ☐ 5. Seasonal Conversion

THIS APPLICATION REQUIRES

- ☒ 1. No Rule Variance
- ☐ 2. First Time System Variance
  - ☐ a. Local Plumbing Inspector Approval
  - ☐ b. State & Local Plumbing Inspector Approval
- ☐ 3. Replacement System Variance
  - ☐ a. Local Plumbing Inspector Approval
  - ☐ b. State & Local Plumbing Inspector Approval
- ☐ 4. Minimum Lot Size Variance
- ☐ 5. Seasonal Conversion Permit

DISPOSAL SYSTEM COMPONENTS

- ☒ 1. Complete Non-engineered System
- ☐ 2. Primitive System (graywater & alt. toilet)
- ☐ 3. Alternative Toilet, specify: _____
- ☐ 4. Non-engineered Treatment Tank (only)
- ☐ 5. Holding Tank, _____ gallons
- ☐ 6. Non-engineered Disposal Field (only)
- ☐ 7. Separated Laundry System
- ☐ 8. Complete Engineered System (2000 gpd or more)
- ☐ 9. Engineered Treatment Tank (only)
- ☐ 10. Engineered Disposal Field (only)
- ☐ 11. Pre-treatment, specify: _____
- ☐ 12. Miscellaneous Components

SIZE OF PROPERTY

12.8± ☐ SQ. FT. ☒ ACRES

SHORELAND ZONING

☐ Yes ☒ No

DISPOSAL SYSTEM TO SERVE

- ☐ 1. Single Family Dwelling Unit, No. of Bedrooms: ____
- ☐ 2. Multiple Family Dwelling, No. of Units: ____
- ☒ 3. Other: CANINE CENTER (specify)

Current Use ☐ Seasonal ☐ Year Round ☒ Undeveloped

TYPE OF WATER SUPPLY

☒ 1. Drilled Well ☐ 2. Dug Well ☐ 3. Private ☐ 4. Public ☐ 5. Other

DESIGN DETAILS (SYSTEM LAYOUT SHOWN ON PAGE 3)

TREATMENT TANK

- ☒ 1. Concrete
  - ☒ a. Regular
  - ☐ b. Low Profile
- ☐ 2. Plastic
- ☐ 3. Other: _____

CAPACITY: 1000 GAL.

DISPOSAL FIELD TYPE & SIZE

- ☒ 1. Stone Bed ☐ 2. Stone Trench
- ☐ 3. Proprietary Device
  - ☐ a. cluster array ☐ c. Linear
  - ☐ b. regular load ☐ d. H-20 load
- ☐ 4. Other: _____

SIZE: 720 ☒ sq. ft. ☐ lin. ft.

GARBAGE DISPOSAL UNIT

☒ 1. No ☐ 2. Yes ☐ 3. Maybe

If Yes or Maybe, specify one below:

- ☐ a. multi-compartment tank
- ☐ b. ___ tanks in series
- ☐ c. Increase in tank capacity
- ☐ d. Filter on Tank Outlet

DESIGN FLOW

175 gallons per day

BASED ON:

- ☐ 1. Table 501.1 (dwelling unit(s))
- ☒ 2. Table 501.2 (other facilities)

SHOW CALCULATIONS for other facili

1 MEDICAL STAFF = 80 gpd
10 PATIENTS @ 5 = 50 "
3 EMP @ 15 = 45 "

- ☐ 3. Section 503.0 (meter readings)

ATTACH WATER METER DATA

SOIL DATA & DESIGN CLASS

PROFILE	CONDITION	DESIGN
8	D	3

at Observation Hole # 1

Depth 12"

of Most Limiting Soil Factor

DISPOSAL FIELD SIZING

- ☐ 1. Small—2.0 sq. ft. / gpd
- ☐ 2. Medium—2.6 sq. ft. / gpd
- ☐ 3. Medium—Large 3.3 sq. ft. / gpd
- ☒ 4. Large—4.1 sq. ft. / gpd
- ☐ 5. Extra Large—5.0 sq. ft. / gpd

EFFLUENT EJECTOR PUMP

- ☐ 1. Not Required
- ☐ 2. May Be Required
- ☒ 3. Required

Specify only for engineered systems:

DOSE: 60-80 gallons

LATITUDE AND LONGITUDE

at center of disposal area

Lat. 44 d 21 m 13 s
Lon. 69 d 47 m 06 s
if g.p.s. state margin of error: ±20'

SITE EVALUATOR STATEMENT

I certify that on 8/9/07 (date) I completed a site evaluation on this property and state that the data reported are accurate a that the proposed system is in compliance with the State of Maine Subsurface Wastewater Disposal Rules (10-144A CMR 241).

J. John Brochu	194	8/23/07
Site Evaluator Signature	SE #	Date
J. JOHN BROCHU	968-3434 841-0525	johnb@fairpoint.net
Site Evaluator Name Printed	Telephone Number	E-mail Address

Note: Changes to or deviations from the design should be confirmed with the Site Evaluator.

HHE-200 Rev. 4/05

RECEIVED SEP 04 2007 By

SUBSURFACE WASTEWATER DISPOSAL SYSTEM APPLICATION

Maine Department of Human Services
Division of Health Engineering, Station 10
(207) 287-5672 FAX (207) 287-4172

Town, City, Plantation	Street, Road, Subdivision	Owner or Applicant Name
AUGUSTA	249 OLD BELGRADE RD	GREYHOUND PLACEMENT CENTER

SITE PLAN Scale: 1" = 50 ft.

SITE LOCATION MAP
(Attach map from Maine Atlas for First Time System Variance)

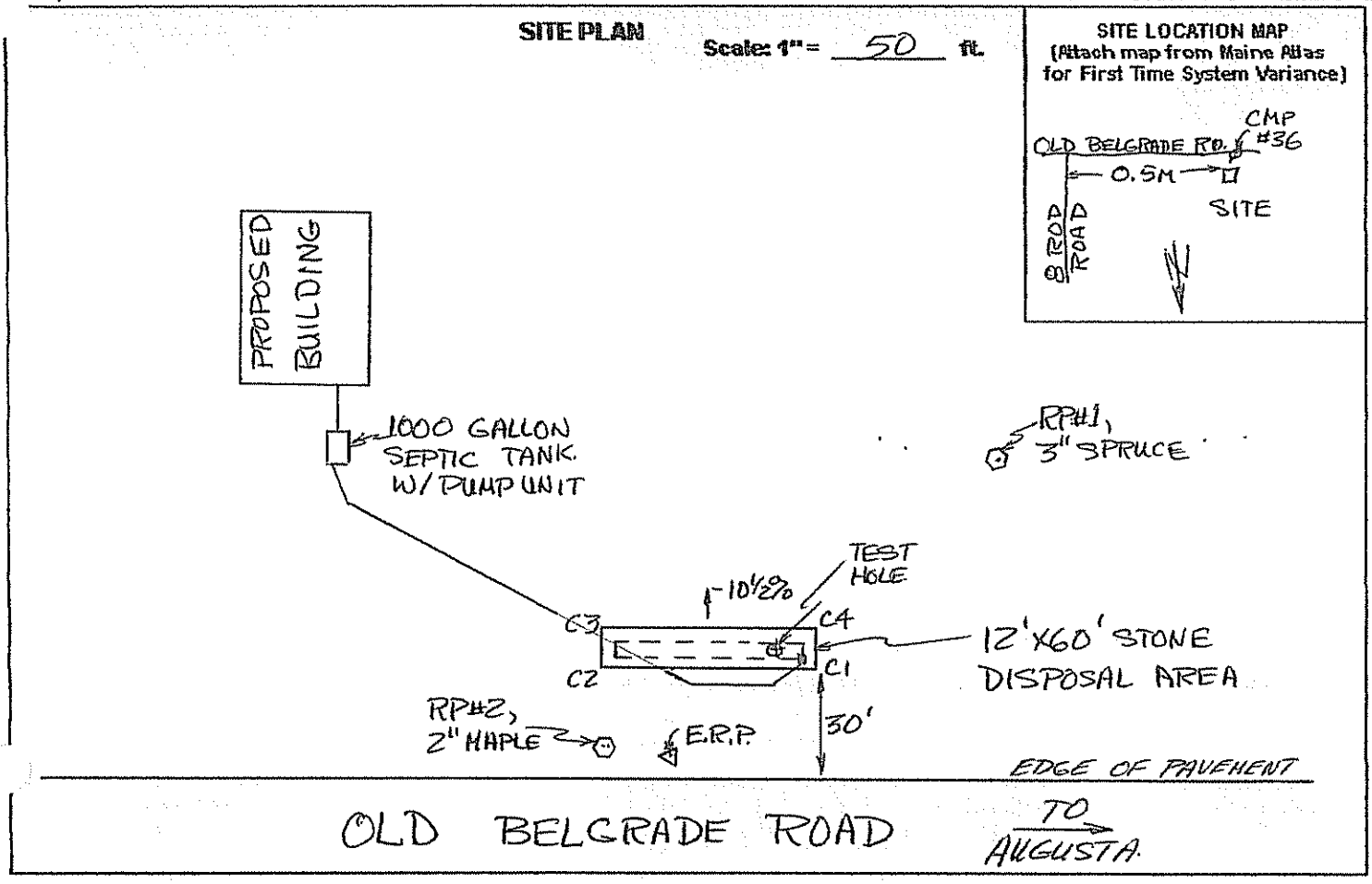

SOIL PROFILE DESCRIPTION AND CLASSIFICATION (Location of Observation Holes Shown Above)

Observation Hole # 1 ☒ Test Pit ☐ Boring

0" Depth of organic horizon above mineral soil

Depth below mineral soil surface (inches)	Texture	Consistency	Color	Mottling
0–6	FINE SANDY LOAM	FRIABLE	BROWN	NONE
6–12	~~SILT FINE SANDY LOAM~~	~~SOMEWHAT FRIABLE~~	~~REL. BROWN OLIVE BROWN~~	~~FEW~~
12–18	SILT		OLIVE	COMMON
18–24	LOAM	FIRM	↓	DISTINCT
30–36			GRAY	

Soil Profile	Classification Condition	Slope Percent	Limiting Factor Depth	
B	D	-10½	12+"	☒ Groundwater ☐ Restrictive Layer ☐ Bedrock

Observation Hole # _____ ☐ Test Pit ☐ Boring

_____" Depth of organic horizon above mineral soil

Depth below mineral soil surface (inches)	Texture	Consistency	Color	Mottling
0–6				
6–12				
12–18				
18–24				
24–30				
30–36				
36–42				
42–48				

Soil Profile	Classification Condition	Slope Percent	Limiting Factor Depth	
				☐ Groundwater ☐ Restrictive Layer ☐ Bedrock

John Brochu — Site Evaluator Signature
194 — SE #
8/23/07 — Date

SUBSURFACE WASTEWATER DISPOSAL SYSTEM APPLICATION		Department of Human Services Division of Health Engineering (207) 287-5672 Fax: (207) 287-3165
Town, City, Plantation AUGUSTA	Street, Road, Subdivision 249 OLD BELGRADE ROAD	Owner's Name GREYHOUND PLACEMENT SERVICE

SUBSURFACE WASTEWATER DISPOSAL PLAN

SCALE: 1" = 20 FT.

DISTANCE TABLE

ERP-c1 = 55.2'
ERP -c2 = 31.4'
RP#1-c1 = 77.3'
RP#2-c2 = 23'

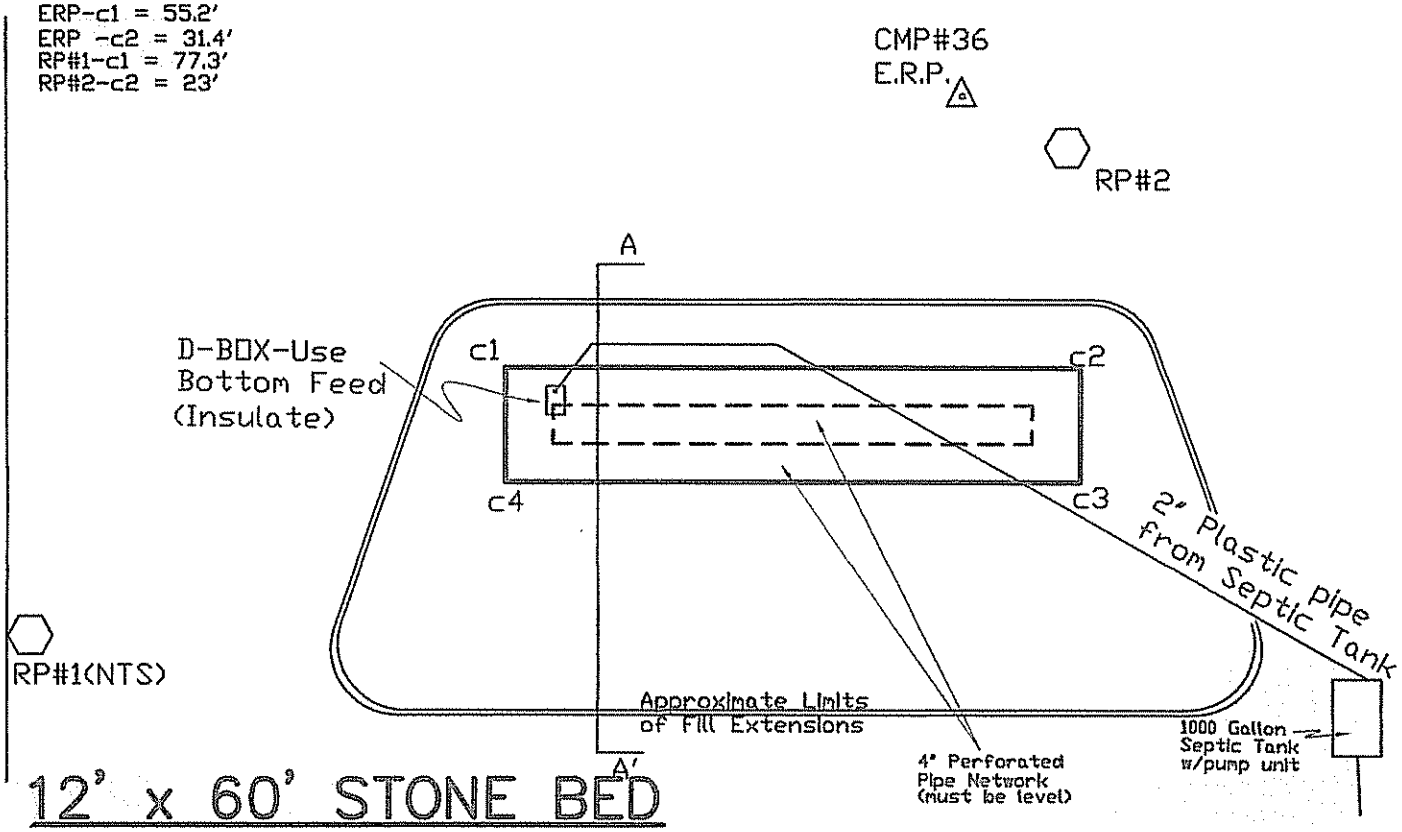

FILL REQUIREMENTS		CONSTRUCTION ELEVATIONS		ELEVATION REFERENCE POINT
Depth of Fill (Upslope)	36+"	Finished Grade Elevation	-53"	Location & Description: Spike 12" above ground on CMP#36
		Top of Distribution Pipe or Proprietary Device	-66"	
Depth of Fill (Downslope)	56+"	Bottom of Disposal Area	-77"	Reference Elevation: 0.0"

DISPOSAL AREA CROSS SECTION

Scale

Horizontal 1" = 5 ft.

Vertical 1" = 10 ft.

*Scarify surface before placing fill
*Fill To be Gravelly sand
*Loam & seed to prevent erosion
*Slope Surface @ 3%

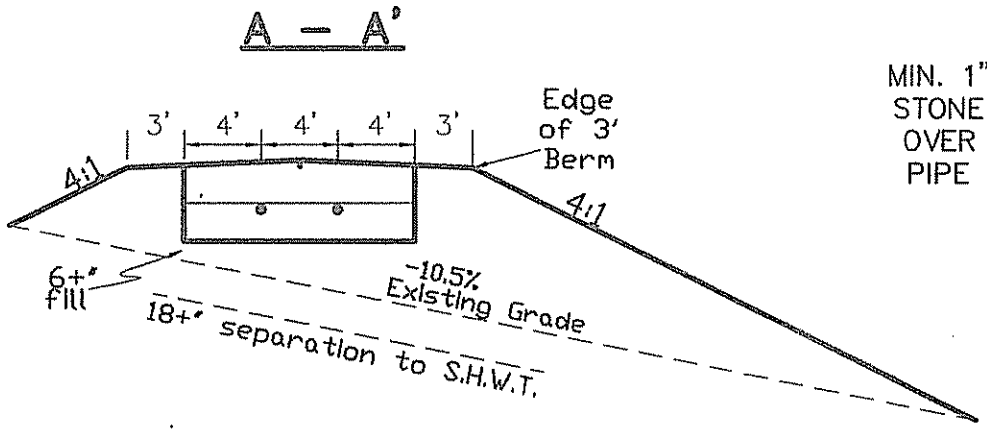

DETAIL-NO SCALE

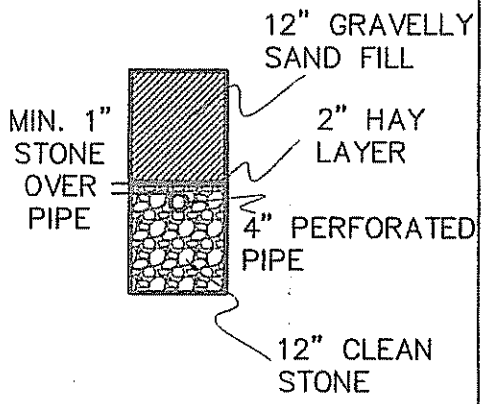

Site Evaluator Signature	SE #	Date
[signature]	194	8/23/2007