Bernier, Paul

Division of Health Engineering
Station No. 10
State House
Augusta, Maine 04333

APPLICATION FOR SUBSURFACE WASTEWATER DISPOSAL PERMIT

HHE-200

This Is NOT A Permit; This Form When Completed Must Be Presented To The Local Plumbing Inspector To Obtain A Permit

This Application Is For: (X) New System ( ) Replacement Of Entire System ( ) Expanded System ( ) Replacement Of Disposal Area Only ( ) Conversion Permit

Variance: (X) None Required ( ) New System Variance ( ) Replacement System Variance With: ( ) LPI Approval ( ) Dept. Review

PROPERTY LOCATION: AUGUSTA (Town, Plantation) — OLD BELGRADE RD (Street, Road) — Subdivision Name — Lot No.

PROPERTY OWNER or APPLICANT: PAUL BERNIER

Mailing Address: BOOTHBY ST (Street) — Tel. No.

AUGUSTA (Town), MAINE (State) — Zip Code

LOCATION PLAN OF PROPERTY

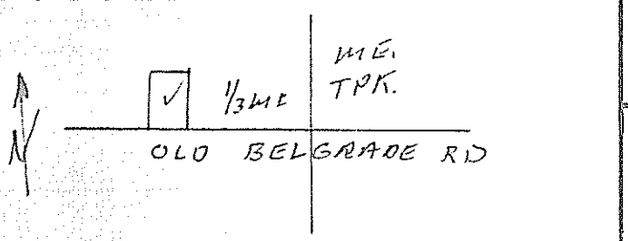

Roads, Landmarks, Distances

TYPE OF STRUCTURE, DESIGN FLOW

(X) Single Family Dwelling — Number of Bedrooms 2 — Design Flow 240 GPD

Design Flow based on ( ) Minimum (X) Moderate ( ) Conservative

( ) Reduction in Design Flow due to Water Conservation

If so, specify type (s) _____

( ) Other Establishment. Specify _____ Type of Facility

(Number of Employees, Seating Capacity, Building Size, etc.)

Design Flow _____ GPD — If greater than 2000 GPD, Specify Professional Engineer

PROPERTY INFORMATION

Area of Property 30,000± (X) Sq. Ft. ( ) Acres ( ) Zoned (X) Not Zoned

If zoned, type of zoning _____

Property on Water Body, If so, Name of Water Body _____

Water Supply is: ( ) Public Utility, ( ) Drilled Well _____ depth ( ) Dug Well _____ depth ( ) Well Point ( ) Spring ( ) Surface Water

SOIL PROFILE DESCRIPTION Location of Observation Holes shown on page 2

TEXTURAL DESCRIPTION OF EACH SOIL STRATA ENCOUNTERED

	Observation Hole No. 1 ( ) Test Pit (X) Boring (CUT SLOPE)	Observation Hole No. ( ) Test Pit ( ) Boring	Observation Hole No. ( ) Test Pit ( ) Boring
Organic Strata or (Existing Fill)	Thickness —	Thickness	Thickness
1st Original Mineral Soil Strata	Y.B.L.S. Depth from 0 " to 48+ " Thickness	Depth from 0 " to " Thickness	Depth from 0 " to " Thickness
2nd	Depth from " to " Thickness	Depth from " to " Thickness	Depth from " to " Thickness
3rd	Depth from " to " Thickness	Depth from " to " Thickness	Depth from " to " Thickness
4th	Depth from " to " Thickness	Depth from " to " Thickness	Depth from " to " Thickness
Total Depth of Observation Hole	48+ "	Total Depth of Observation Hole "	Total Depth of Observation Hole "

Depth from top of ORIGINAL MINERAL SOIL

Maximum Seasonal High Ground	( ) None evident — Water Table Depth "	( ) None evident Water Table Depth "		( ) None evident Water Table Depth "	
Depth to Restrictive Layer	( ) None evident — "	( ) None evident "		( ) None evident "	
Depth to Bedrock	( ) None evident — "	( ) None evident "		( ) None evident "	
PROFILE	CONDITION	SLOPE	PROFILE	CONDITION	SLOPE
4	B	6 %			%
					%

DISPOSAL SYSTEM PROPOSED Location of system and Details on Proposed Plan on page 2

TYPE OF SYSTEM

(X) Combined System
( ) Separated System

If separated system, type of black waste disposal system to be used:

( ) Compost
( ) Pit Privy
( ) Sealed Vault Privy
( ) Other:

Specify: _____

( ) Separated Laundry System
( ) Primitive System
( ) Holding Tank

TREATMENT TANK

(X) Septic Tank
( ) Aerobic Tank

Size 1000 Gals.

DOSAGE

(X) Pumping is not required
( ) Pumping is required

The dose should be: _____ Gals.

Dosage chamber capacity shall be _____ gals.

( ) System should be vented

SUBSURFACE DISPOSAL AREA/TYPE

( ) Trench Disposal Area

Total linear feet of trench _____ ft.
Number of Trench lines _____ ft.
Length of each trench line _____ ft.
Depth of Stone _____ inches.
Reduction on trench length due to stone depth _____ %

(X) Bed Disposal Area

Total bed area 600 sq. ft.
Number of beds 1
Width 20 ft. Length 30 ft.

( ) Chamber Disposal Area

Total chamber area _____ sq. ft.
Number of clusters _____
Width _____ ft. Length _____ ft.
( ) H-20 required

SYSTEM SIZE RATING

( ) Small (X) Medium ( ) Medium Large ( ) Large ( ) Extra Large

DISPOSAL AREA ELEVATION

Depth of Upslope Fill required 0 inches.
Depth of Downslope Fill required 14± inches.
Reference Elevation Point established at 0 Elevation.
Disposal Area Bottom to be established at −42" Elevation.
Top of Distribution Lines or Top of Chambers −30" Elevation

(X) Yes ( ) No: The proposed subsurface disposal area will be located at least 100 feet from any and all wells, springs, surface water bodies and courses (lake, pond, ocean, brook stream, river), swamps, marshes, and bogs.

(X) Yes ( ) No: The proposed subsurface disposal area will be located at least 300 feet from any and all wells and springs producing 2000 gallons or more of water per day and any public water supplies.

FOR USE BY SITE EVALUATOR VALID COPY ONLY WITH EMBOSSED SEAL

On 3/16/81 (date), a site investigation for this project was completed. I conducted this soil evaluation and certify that the results indicated above best represent the soil conditions found. I recommend the above type and size of subsurface wastewater disposal system. I also recommend the proposed disposal system layout and location shown on page 2.

Signature of Site Evaluator [signature] — Date signed 3/16/81 — Site Evaluator License Number 51

FOR USE BY OWNER/APPLICANT

I certify that all the information submitted to be true and correct to the best of my knowledge. I understand that any falsification of this application is reason to deny a permit to install a disposal system and that the permit is valid for a six (6) month period from the date of permit issuance. I also understand that no guarantee is intended or implied by reason of any advice or approval given.

Signature of Owner/Applicant Paul Bernier — Date Signed 3-17-81

FOR USE BY LPI: (X) This Application is approved. If conditions, specify:

( ) This Application is Denied due to: ( ) System is not in accordance with Rules. ( ) Application is incomplete. ( ) Application is unclear. ( ) Development is in violation of other Regulations. Specify _____

Signature of LPI Richard P. Baker — Date 3-17-81

PERMIT NO. 4 2 5 1 5 E — Date Issued 3-17-81

PROPERTY OWNER or APPLICANT	DISPOSAL AREA ELEVATION	
	Depth of Upslope Fill required 0 inches.	Reference Elevation Point established at 0 Elevation.
	Depth of Downslope Fill required 14± inches.	Disposal Area Bottom to be established at -42" Elevation.
		Top of Distribution Lines or Top of Chambers -30" Elevation.

Site Plan Scale 1" = _____ ft.

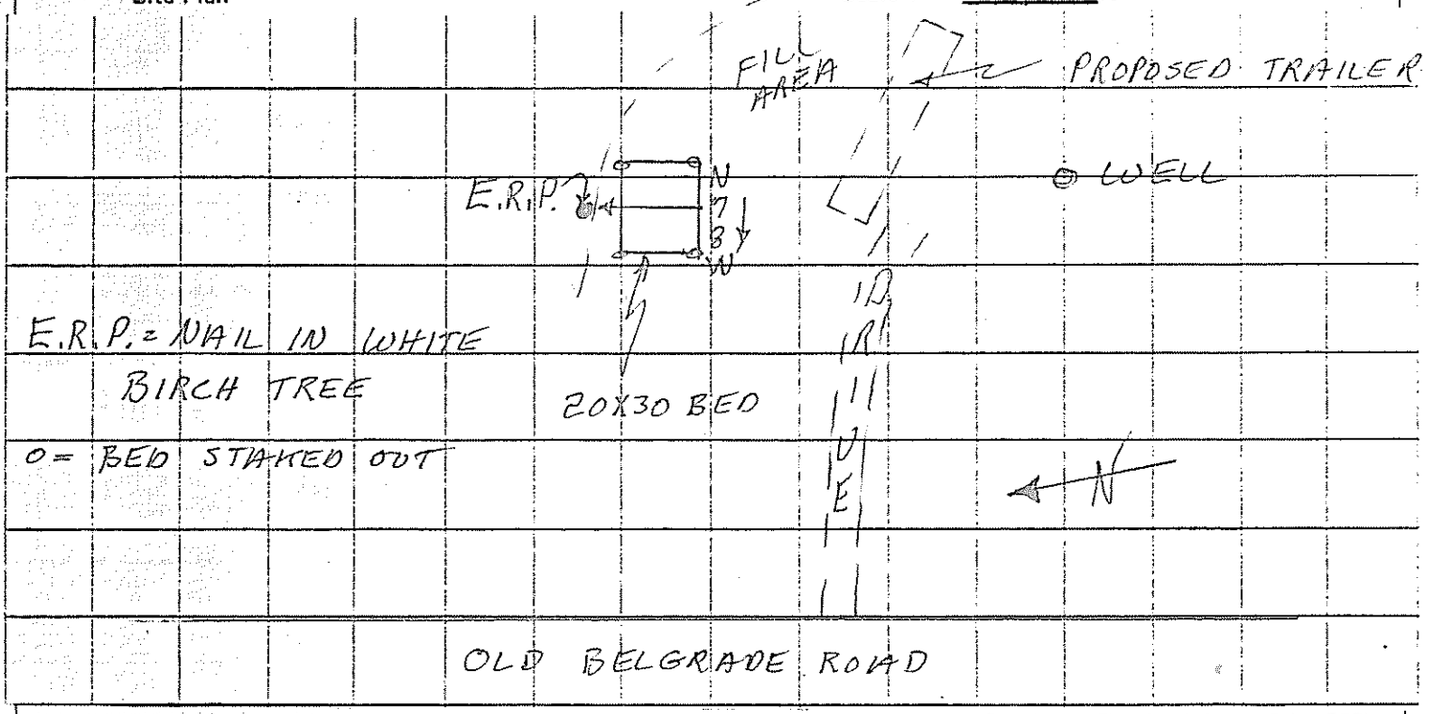

● Designates Elevation Reference Point (ERP)

○ Designates Observation Hole (TP or B)

Subsurface Wastewater Disposal Plan Scale 1" = 20' or AS SHOWN

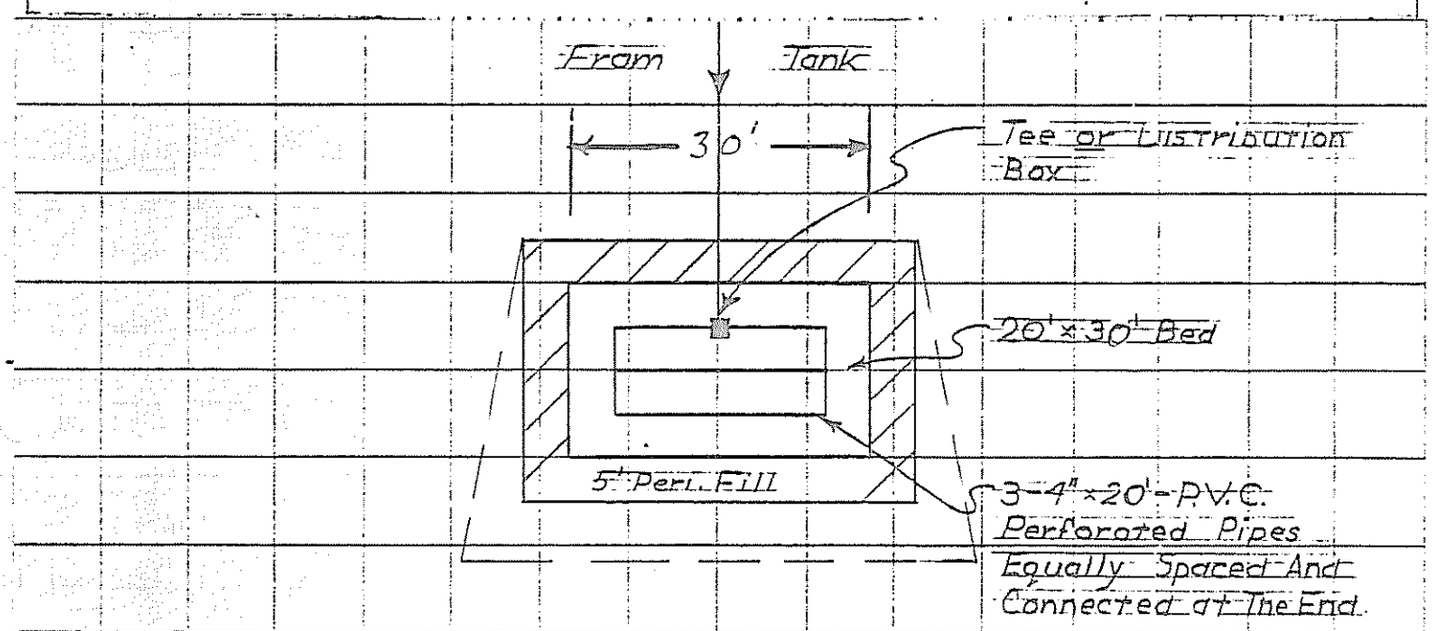

Subsurface Wastewater Disposal Area Cross-section Scale: Vertical: 1" = 5' Horizontal: 1" = 10'

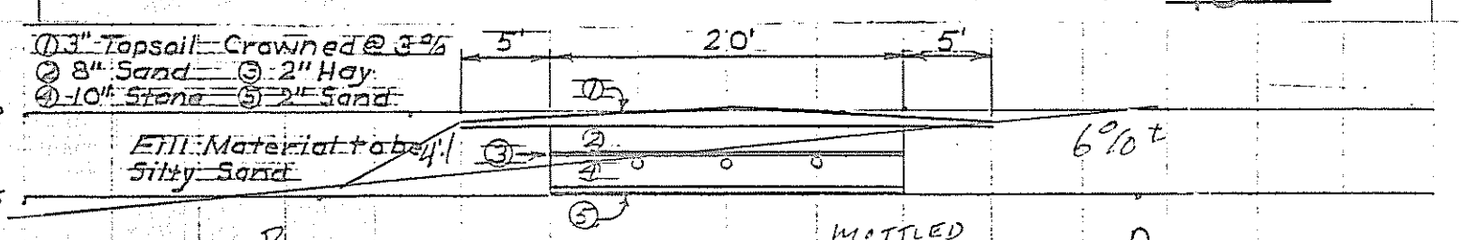

Remove Stumps, Boulders, and or Sod and Scarify Surface Before Fill Is Placed

Site Evaluators Signature	Date	License Number
[signature]		51

HHE-200-A RV7/80