SUBSURFACE WASTEWATER DISPOSAL SYSTEM APPLICATION

Maine Department of Human Services
Division of Health Engineering, Station 10
(207) 287-5672 FAX (207) 287-4172

>> Caution: Permit Required -- Attach In Space Below <<

AUGUSTA 5142 TOWN COPY

Date Permit Issued: 8/7/03 $ 100.00 FEE ☐ If Double Fee Charged

Local Plumbing Inspector Signature L.P.I. # 150

PROPERTY LOCATION

City, Town or Plantation: AUGUSTA

Street Address: RT 3 3-CORNER RD.

Subdivision, Lot #: 3284 No. Belfast Ave.

OWNER/APPLICANT INFORMATION

Name (last, first, MI) Owner ☐: TURGEON MARC

Applicant ☐:

Mailing Address of ☑ Owner ☐ Applicant: 54 RODRIQUE HEIGHTS
AUGUSTA, ME. 04330

Daytime Tel #:

Municipal Tax Map # 4 Lot # 164A

Owner or Applicant Statement

I state that the information submitted is correct to the best of my knowledge and understand that any falsification is reason for the Department and/or Local Plumbing Inspector to deny a Permit.

Signature of Owner or Applicant: Marc Turgeon Date: 8-4-03

Caution: Inspection Required

I have inspected the installation authorized above and found it to be in compliance with the Subsurface Wastewater Disposal Rules Application

Local Plumbing Inspector Signature: Date Approved: 11/24/03

PERMIT INFORMATION

TYPE OF APPLICATION
- ☑ First Time System
- ☐ Replacement System
- Type Replaced ____
- Year Installed ____
- ☐ Expanded System
  - a ☐ Minor expansion
  - b ☐ Major expansion
- ☐ Experimental System
- ☐ Seasonal Conversion

THIS APPLICATION REQUIRES
1. ☑ No Rule Variance
2. ☐ First Time System Variance
   a. ☐ Local Plumbing Inspector Approval
   b. ☐ State & Local Plumbing Inspector Approval
3. Replacement System Variance
   a. ☐ Local Plumbing Inspector Approval
   b. ☐ State & Local Plumbing Inspector Approval
4. ☐ Minimum Lot Size Variance
5. ☐ Seasonal Conversion Approval

DISPOSAL SYSTEM COMPONENT(S)
1. ☑ Complete Non-engineered System
2. ☐ Primitive System (graywater & alt toilet)
3. ☐ Alternative Toilet, specify: ____
4. ☐ Non-Engineered Treatment Tank (only)
5. ☐ Holding Tank, ____ gallons
6. ☐ Non-engineered Disposal Field (only)
7. ☐ Separated Laundry System
8. ☐ Complete Engineered System (2000 gpd or more)
9. ☐ Engineered Treatment Tank (only)
10. ☐ Engineered Disposal Field (only)
11. ☐ Pre-treatment, specify:

SIZE OF PROPERTY
1.5± ☐ sq. ft. ☑ acres

SHORELAND ZONING
☑ Yes ☐ No

DISPOSAL SYSTEM TO SERVE
1. ☑ Single Family Dwelling Unit, No. of Bedrooms: 3
2. ☐ Multiple Family Dwelling, No. of Units: ____
3. ☐ Other: ____ SPECIFY

TYPE OF WATER SUPPLY
1. ☑ Drilled Well 2. ☐ Dug Well 3. ☐ Private
4. ☐ Public 5. ☐ Other

DESIGN DETAILS (SYSTEM LAYOUT SHOWN ON PAGE 3)

TREATMENT TANK
- ☑ Concrete
  - a ☑ Regular
  - b ☐ Low Profile
- ☐ Plastic
- ☐ Other ____
- CAPACITY 4000 gallons

DISPOSAL FIELD TYPE & SIZE
1. ☑ Stone Bed 2. ☐ Stone Trench
3. ☐ Proprietary Device
   a. ☐ Cluster array c. ☐ Linear
   b. ☐ Regular load d. ☐ H-20 load
4. ☐ Other: ____

SIZE 900 ☑ sq. ft. ☐ lin. ft.

GARBAGE DISPOSAL UNIT
1. ☑ No 2. ☐ Maybe
2. ☐ Yes >> Specify one below:
   a. ☐ Multi-compartment Tank
   b. ☐ Tanks in Series
   c. ☐ Increase in Tank Capacity
   d. ☐ Filter on Tank Outlet

DESIGN FLOW
270 gallons per day

BASED ON
1. ☑ Table 901.1 (dwelling unit(s))
2. ☐ Table 901.2 (other facilities)

SHOW CALCULATIONS -- for other facilities --

3. ☐ Section 903.0 (meter readings)

ATTACH WATER-METER DATA

SOIL DATA & DESIGN CLASS

PROFILE CONDITION DESIGN
3 C, 16

Observation Hole # 1

Depth 16 Elevation -56

OF MOST LIMITING SOIL FACTOR

DISPOSAL FIELD SIZING
1. ☐ Small -- 2.0 sq. ft./gpd
2. ☐ Medium -- 2.6 sq. ft./gpd
3. ☑ Medium-Large -- 3.3 sq. ft./gpd
4. ☐ Large -- 4.1 sq. ft./gpd
5. ☐ Extra Large -- 5.0 sq. ft./gpd

PUMPING
1. ☐ Not Required
2. ☐ May Be Required
3. ☑ Required >> Specify only for engineered or experimental systems:

DOSE: gallons

SITE EVALUATOR STATEMENT

Certify that on 8/28/01 (date) I completed a site evaluation on this property and state that the data reported are accurate and that the proposed system is in compliance with the State of Maine Subsurface Wastewater Disposal Rules (10-144A CMR 241)

Site Evaluator Signature: ____ SE #: 256 Date: 8/28/01

Site Evaluator Name Printed: JOHN PHILBRICK Telephone #: 547-3732

SUBSURFACE WASTEWATER DISPOSAL SYSTEM APPLICATION

Maine Department of Human Services
Division of Health Engineering, Station 10
(207) 287-5672 FAX (207) 287-4172

Town, City, Plantation	Street, Road, Subdivision	Owner or Applicant Name
AUGUSTA	RT #3 3 CORNER RD.	MARC TURGEON

SITE PLAN

Scale: 1" = 50 ft.

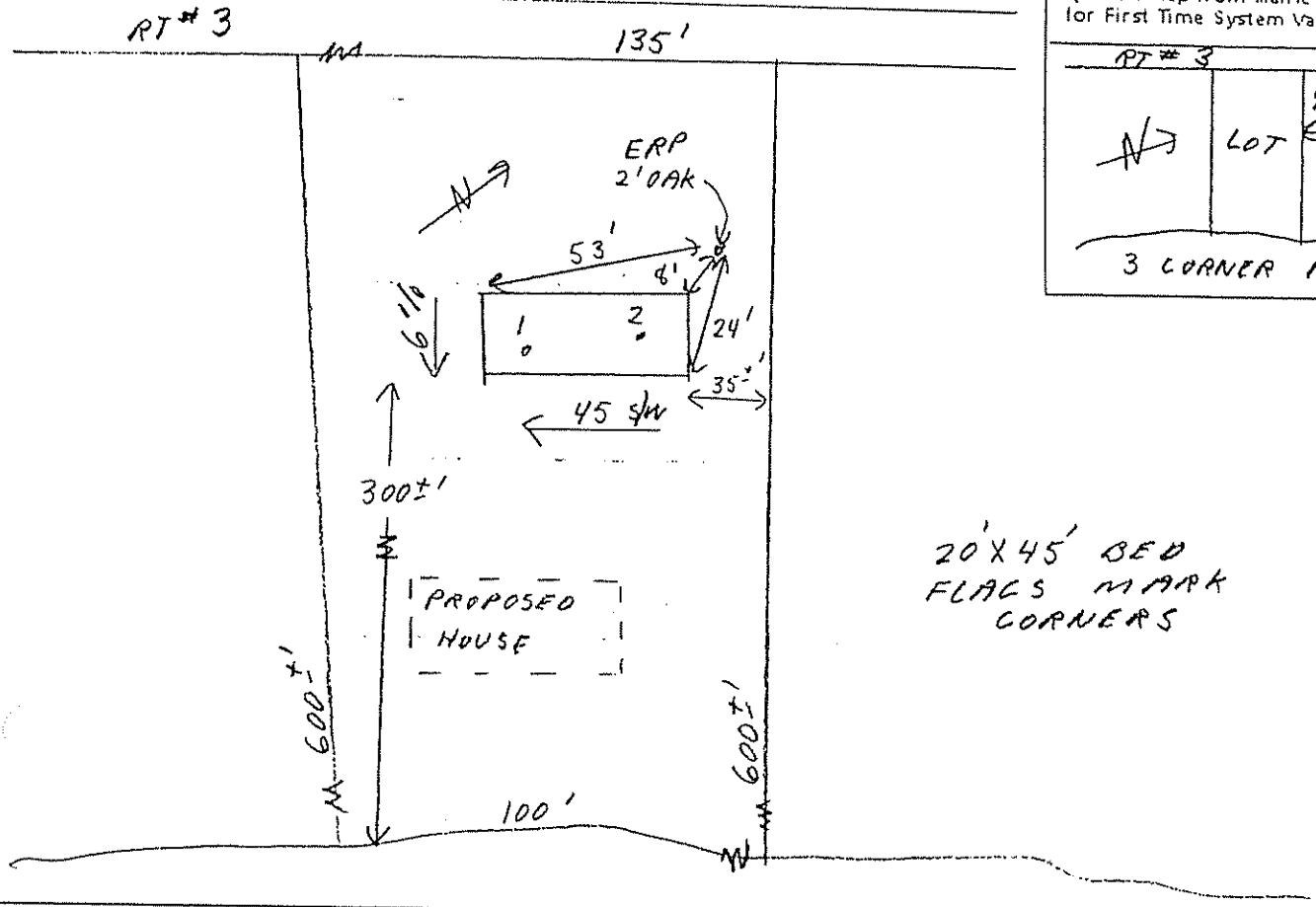

SITE LOCATION MAP
(Attach map from Maine Atlas for First Time System Variance)

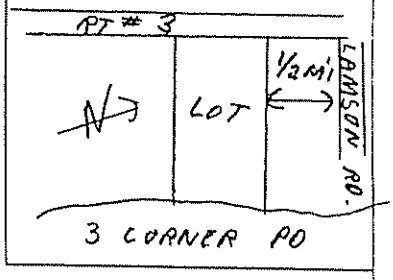

SOIL PROFILE DESCRIPTION AND CLASSIFICATION

(Location of Observation Holes Shown Above)

Observation Hole # 1 ☑ Test Pit ☐ Boring

2± Depth of organic horizon above mineral soil

Depth below mineral soil surface (inches)

Texture	Consistency	Color	Mottling
VERY STONY SANDY LOAM	FRIABLE	DARK BR.	NONE
		YELLOW BR.	
	FIRM	GRAY	COMMON DISTINCT

Soil Profile	Classification Condition	Slope Percent	Limiting Factor Depth	
3	C	6	16	☑ Groundwater ☐ Restrictive Layer ☐ Bedrock

Observation Hole # 2 ☑ Test Pit ☐ Boring

2± Depth of organic horizon above mineral soil

Depth below mineral soil surface (inches): 0, 6, 12, 18, 24, 30, 36, 42, 48

Texture	Consistency	Color	Mottling
	SAME AS #1		

Soil Profile	Classification Condition	Slope Percent	Limiting Factor Depth	
3	C	6	16	☑ Groundwater ☐ Restrictive Layer ☐ Bedrock

Site Evaluator Signature

256
SE #

8/28/01
Date

SUBSURFACE WASTEWATER DISPOSAL SYSTEM APPLICATION

08246445

Town, City, Plantation: AUGUSTA

Street, Road, Subdivision: RT # 3 3-CORNER RD.

Owner's Name: MARC TURGEON

SUBSURFACE WASTEWATER DISPOSAL PLAN

Scale: 1" = 20 Ft. or as shown

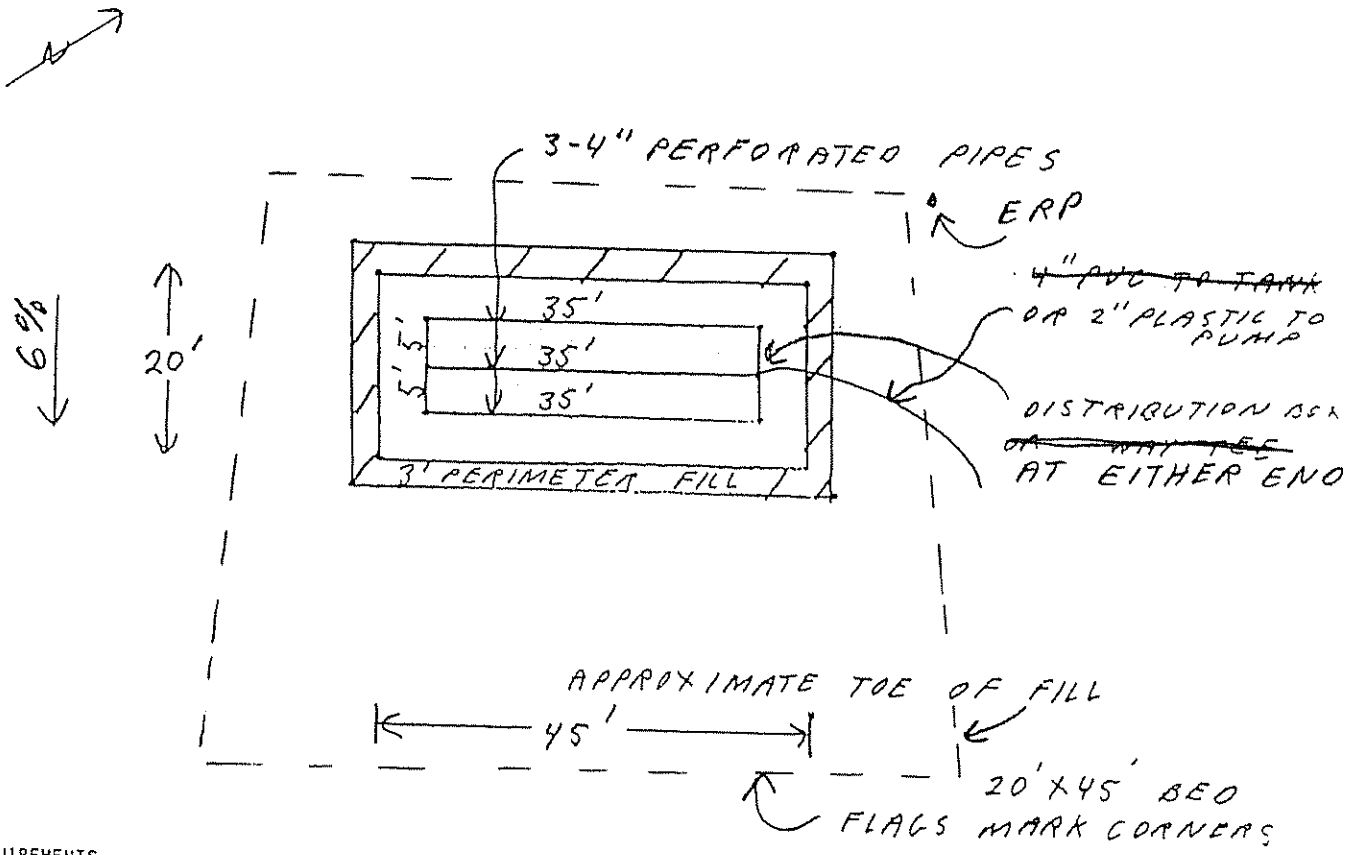

FILL REQUIREMENTS

Depth of Fill (Upslope) 20"

Depth of Fill (Downslope) 34"

CONSTRUCTION ELEVATION

Reference Elevation is 0"

Bottom of Disposal Area -44"

Top of Distribution Lines or Chambers -33"

ELEVATION REFERENCE POINT

ERP IS IN 2' OAK 8' NORTH OF SYSTEM, 21" ABOVE GROUND

DISPOSAL AREA CROSS SECTION

Scale:

Vertical: 1 inch = 5 Ft.

Horizontal: 1 inch = 10 Ft.

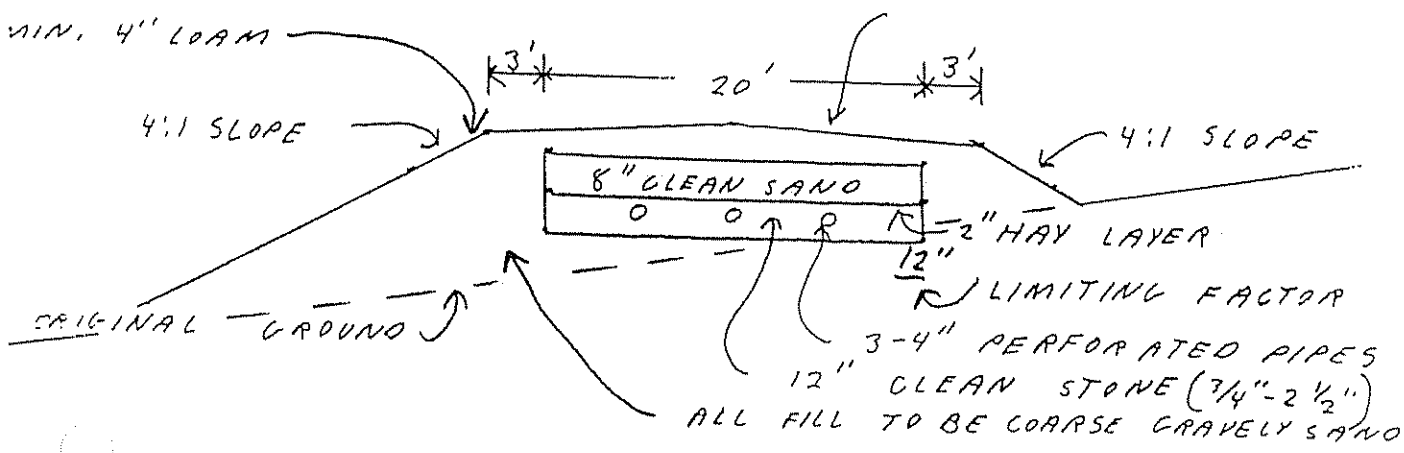

Site Evaluator Signature

256
SE#

8/28/01
Date

Approved for use as HHE 200 by Division of Health Engineering 9/87