JAN 19 1988

87 039

SUBSURFACE WASTEWATER DISPOSAL SYSTEM APPLICATION

Department of Human Services
Division of Health Engineering
(207)289-3826

PROPERTY ADDRESS

Town Or Plantation	Augusta
Street Subdivision Lot #	Lamson Road

PROPERTY OWNERS NAME

Last: Niles First: Wayne

Applicant Name:	Donald J. Grady, Jr.
Mailing Address of Owner/Applicant (If Different)	51 State Street, Apt. 1 Augusta, Maine 04330

AUGUSTA PERMIT # 1,517 TOWN COPY

Date Permit Issued: 1/33/89 $ 40.00 FEE ☐ If Double Fee Charged

Local Plumbing Inspector Signature L.P.I. # 805

Owner/Applicant Statement

I certify that the information submitted is correct to the best of my knowledge and understand that any falsification is reason for the Local Plumbing Inspector to deny a Permit.

Susan R. Grady 12-16-88
Rodrigue Boundels
Signature of Owner/Applicant Date

Caution: Inspection Required

I have inspected the installation authorized above and found it to be in compliance with the Subsurface Wastewater Disposal Rules.

Local Plumbing Inspector Signature 6-12-89 Date Approved

PERMIT INFORMATION

THIS APPLICATION IS FOR:
1. ☒ NEW SYSTEM
2. ☐ REPLACEMENT SYSTEM
3. ☐ EXPANDED SYSTEM
4. ☐ EXPERIMENTAL SYSTEM

SEASONAL CONVERSION
to be completed by the LPI
5. ☐ SYSTEM COMPLIES WITH RULES
6. ☐ CONNECTED TO SANITARY SEWER
7. ☐ SYSTEM INSTALLED – P# _____
8. ☐ SYSTEM DESIGN RECORDED AND ATTACHED

IF REPLACEMENT SYSTEM: n/a
YEAR FAILING SYSTEM INSTALLED _____
THE FAILING SYSTEM IS:
1. ☐ BED 3. ☐ TRENCH
2. ☐ CHAMBER 4. ☐ OTHER: _____

SIZE OF PROPERTY	ZONING
1.15± acre	rural

THIS APPLICATION REQUIRES:
1. ☒ NO RULE VARIANCE
2. ☐ NEW SYSTEM VARIANCE
Attach New System Variance Form
3. ☐ REPLACEMENT SYSTEM VARIANCE
Attach Replacement System Variance Form
a. ☐ Requiring Local Plumbing Inspector Approval
b. ☐ Requires State and Local Plumbing Inspector Approval
4. ☐ MINIMUM LOT SIZE VARIANCE

DISPOSAL SYSTEM TO SERVE:
1. ☒ SINGLE FAMILY DWELLING
2. ☐ MODULAR OR MOBILE HOME
3. ☐ MULTIPLE FAMILY DWELLING
4. ☐ OTHER _____
SPECIFY

INSTALLATION IS:
COMPLETE SYSTEM
1. ☒ NON-ENGINEERED SYSTEM
2. ☐ PRIMITIVE SYSTEM
(Includes Alternative Toilet)
3. ☐ ENGINEERED (+ 2000 gpd)
INDIVIDUALLY INSTALLED COMPONENTS:
4. ☐ TREATMENT TANK (ONLY)
5. ☐ HOLDING TANK _____ GAL
6. ☐ ALTERNATIVE TOILET (ONLY)
7. ☐ NON-ENGINEERED DISPOSAL AREA (ONLY)
8. ☐ ENGINEERED DISPOSAL AREA (ONLY)
9. ☐ SEPARATED LAUNDRY SYSTEM

TYPE OF WATER SUPPLY
proposed drilled well

DESIGN DETAILS (SYSTEM LAYOUT SHOWN ON PAGE 3)

TREATMENT TANK
1. ☒ SEPTIC: ☒ Regular ☐ Low Profile
2. ☐ AEROBIC
SIZE: 1000 GALS.

WATER CONSERVATION
1. ☒ NONE
2. ☐ LOW VOLUME TOILET
3. ☐ SEPARATED LAUNDRY SYSTEM
4. ☐ ALTERNATIVE TOILET
SPECIFY: _____

PUMPING
1. ☐ NOT REQUIRED
2. ☒ MAY BE REQUIRED
(DEPENDING ON TREATMENT TANK LOCATION AND ELEVATION)
3. ☐ REQUIRED
DOSE: 40 GALS.

CRITERIA USED FOR DESIGN FLOW (BEDROOMS, SEATING, EMPLOYEES, WATER RECORDS, ETC.)
3-bedroom, single family dwelling
sized per Table 7-1 of the SSWD Rules (10-144A CMR 241)
(minimum design flow)
DESIGN FLOW: 270 gpd
(GALLONS/DAY)

SOIL CONDITIONS USED FOR DESIGN PURPOSES

PROFILE	CONDITION
2	C•A/III

DEPTH TO LIMITING FACTOR: 15

at test pit 2

SIZE RATINGS USED FOR DESIGN PURPOSES
1. ☐ SMALL
2. ☐ MEDIUM
3. ☒ MEDIUM-LARGE
4. ☐ LARGE
5. ☐ EXTRA LARGE

DISPOSAL AREA TYPE/SIZE
1. ☒ BED 900 Sq. Ft.
2. ☐ CHAMBER _____ Sq. Ft.
☐ REGULAR ☐ H-20
3. ☐ TRENCH _____ Linear Ft.
4. ☐ OTHER: _____

SITE EVALUATOR STATEMENT

On 10-31-87 (date) I conducted a site evaluation for this project and certify that the data reported is accurate. The system I propose is in accordance with the Subsurface Wastewater Disposal Rules.

William T. Noble — Site Evaluator Signature
75 — SE#
11-16-87 — Date

STATE OF MAINE WILLIAM T. NOBLE #75 LICENSED SITE EVALUATOR

(Local Plumbing Inspector's Signature if permit is for Seasonal Conversion.)

93,275

87 039

SUBSURFACE WASTEWATER DISPOSAL SYSTEM APPLICATION

Department of Human Services
Division of Health Engineering

Town, City, Plantation	Street, Road, Subdivision	Owners Name
AUGUSTA	LAMSON ROAD	DONALD J. GRADY, JR.

SITE PLAN

Scale 1" = 40 Ft.

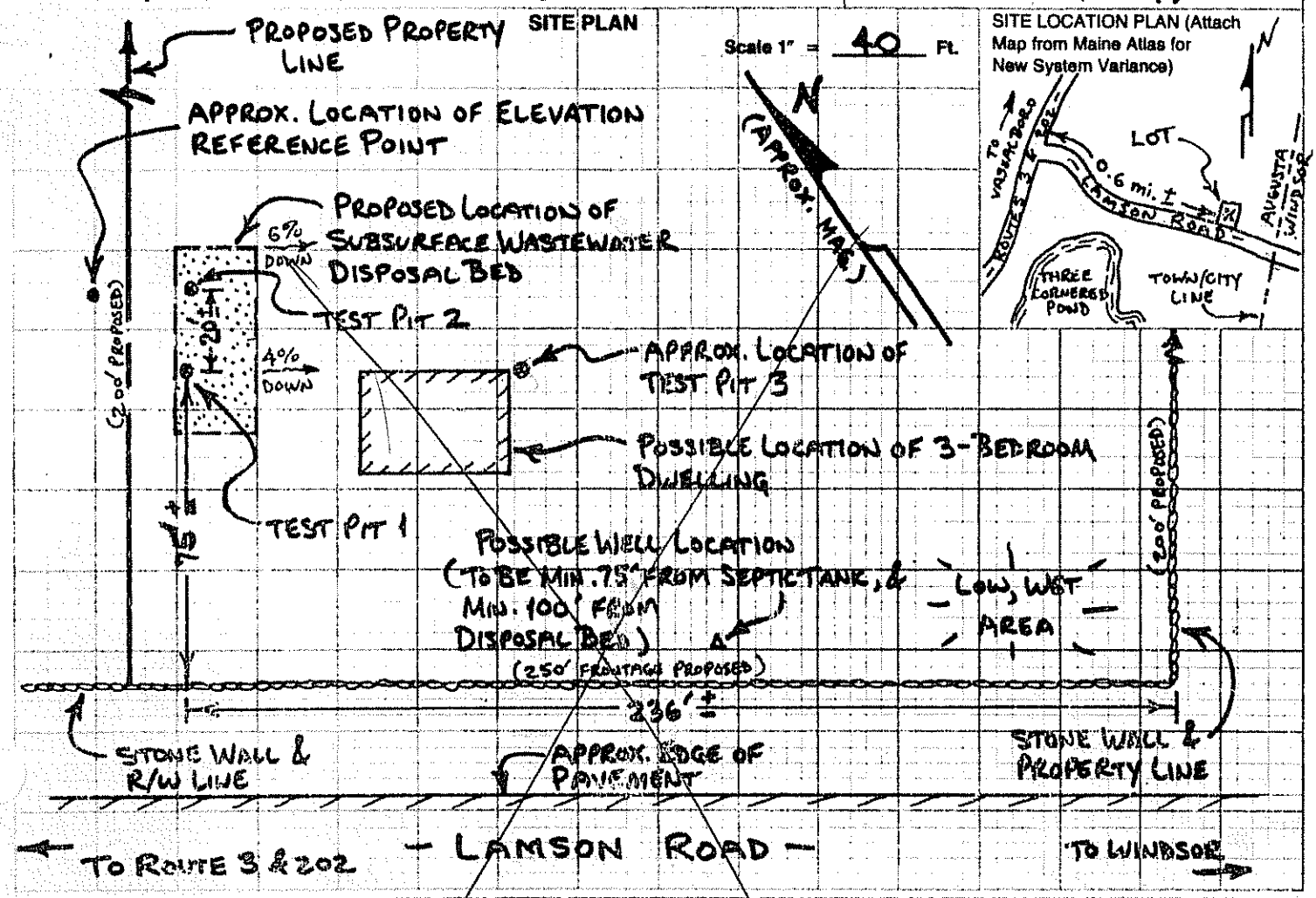

SOIL DESCRIPTION AND CLASSIFICATION (Location of Observation Holes Marked on Plan)

Observation Hole 1 — ☒ Test Pit ☐ Boring

2 " Depth of Organic Horizon Above Mineral Soil

DEPTH BELOW MINERAL SOIL SURFACE (Inches)

Texture	Consistency	Color	Mottling
FINE SANDY LOAM	FRIABLE	DARK BROWN	
		STRONG BROWN	
GRAVELLY FINE SANDY LOAM		YELLOWISH BROWN	
		OLIVE BROWN	
	FIRM, BRITTLE	OLIVE	COMMON DISTINCT

NOTE: TEST PIT 3 REVEALED A 9-D TYPE SOIL WITH DRAINAGE MOTTLES AT AN APPROX. DEPTH OF 8".

Soil Profile	Classification Condition	Slope %	Limiting Factor	
3	C	4	20"	☒ Ground Water ☐ Restrictive Layer ☐ Bedrock

Observation Hole 2 — ☒ Test Pit ☐ Boring

4 " Depth of Organic Horizon Above Mineral Soil

DEPTH BELOW MINERAL SOIL SURFACE (Inches)

Texture	Consistency	Color	Mottling
FINE SANDY LOAM	FRIABLE	DARK BROWN	
		LIGHT BROWN	
GRAVELLY FINE SANDY LOAM		OLIVE	FEW, FAINT
	BEDROCK		

See back copies
Drainage to be located
[illegible]

Soil Profile	Classification Condition	Slope %	Limiting Factor	
2	C/A III	6	15"	☒ Ground Water ☐ Restrictive Layer ☐ Bedrock

William J. Noble
Site Evaluator Signature

75
SE#

11-16-87
Date

HHE-200 Rev. 1/84

574-3252

87-039

Department of Human Services
Division of Health Engineering

SUBSURFACE WASTEWATER DISPOSAL SYSTEM APPLICATION

Town, City, Plantation	Street, Road, Subdivision	Owners Name
AUGUSTA	LAMSON ROAD	DONALD J. GRADY, JR.

SUBSURFACE WASTEWATER DISPOSAL PLAN

Scale 1" = 20 Ft.

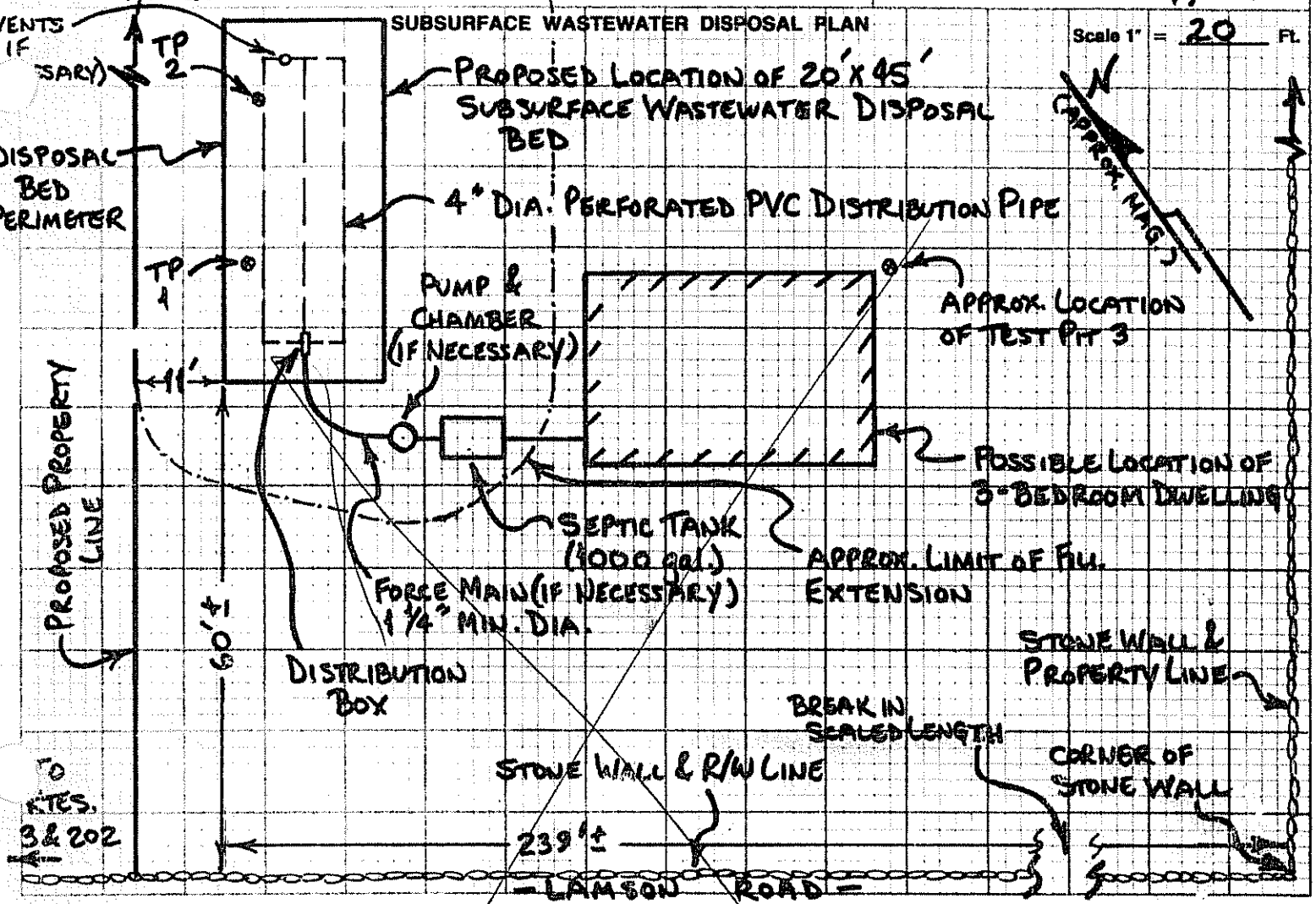

FILL REQUIREMENTS		CONSTRUCTION ELEVATIONS		ELEVATION REFERENCE POINT LOCATION & DESCRIPTION
Depth of Fill (Upslope)	30"	Reference Elevation is	0.0"	NAIL WITH ORANGE FLAGGING IN WHITE PINE TREE, 54" ABOVE GROUND LEVEL AT TREE BASE.
Depth of Fill (Downslope)	42±"	Bottom of Disposal Area	-60.0"	
(AT AREA OF TEST PIT 2)		Top of Distribution Lines or Chambers	-49.0"	

NOTES:

1. BACKFILL & PERIMETER FILL TO BE SANDY LOAM OR COARSER.
2. GRADE LAND AROUND DISPOSAL BED TO DIVERT ANY WATER FROM BED AREA.
3. REMOVE ANY ORGANIC LAYER & SCARIFY THE SOIL SURFACE BEFORE INSTALLING FILL.
4. REQUIRED FILL DEPTHS MAY VARY FROM THOSE SHOWN DUE TO IRREGULARITIES IN SOIL SURFACE.
5. LOCATE TEST PITS ON THE LOT & POSITION BED OVER PITS AS SHOWN IN ABOVE PLAN.
6. REFER TO SECTIONS 11 & 12 IN THE SSWD RULES FOR FURTHER BED INSTALLATION DETAILS.

DISPOSAL AREA CROSS SECTION

Scale:
Vertical: 1 Inch = 10 Ft.
Horizontal: 1 Inch = 10 Ft.

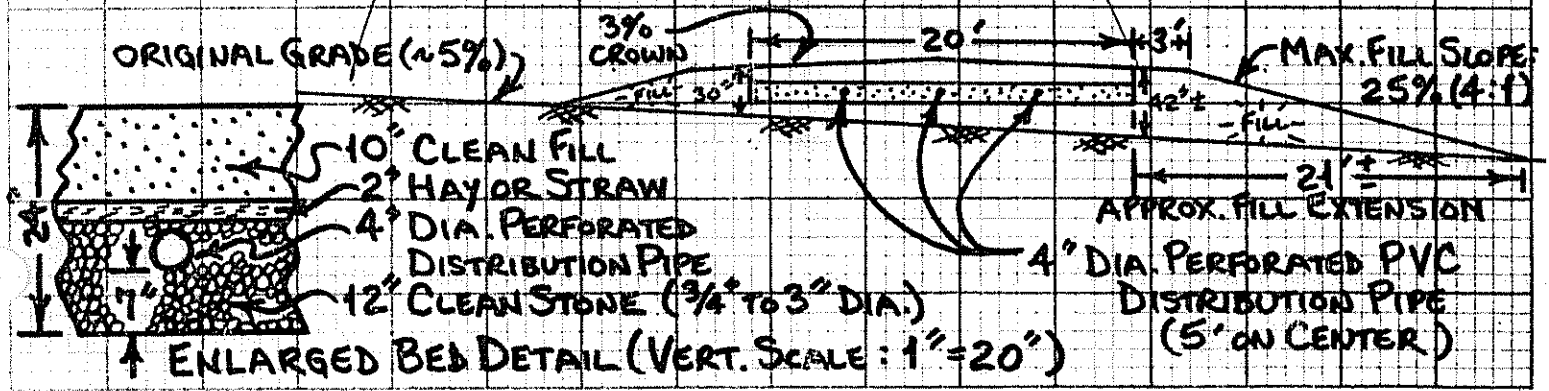

ENLARGED BED DETAIL (VERT. SCALE: 1" = 20")

William J. Noble — Site Evaluator Signature
75 — SE#
11-16-87 — Date

87039A

Department of Human Services
Division of Health Engineering

URFACE WASTEWATER DISPOSAL SYSTEM APPLICATION

City, Plantation: AUGUSTA
Street, Road, Subdivision: LAMSON ROAD
Owners Name: DONALD J. GRADY, JR.

SITE PLAN — Scale 1" = 40 Ft.

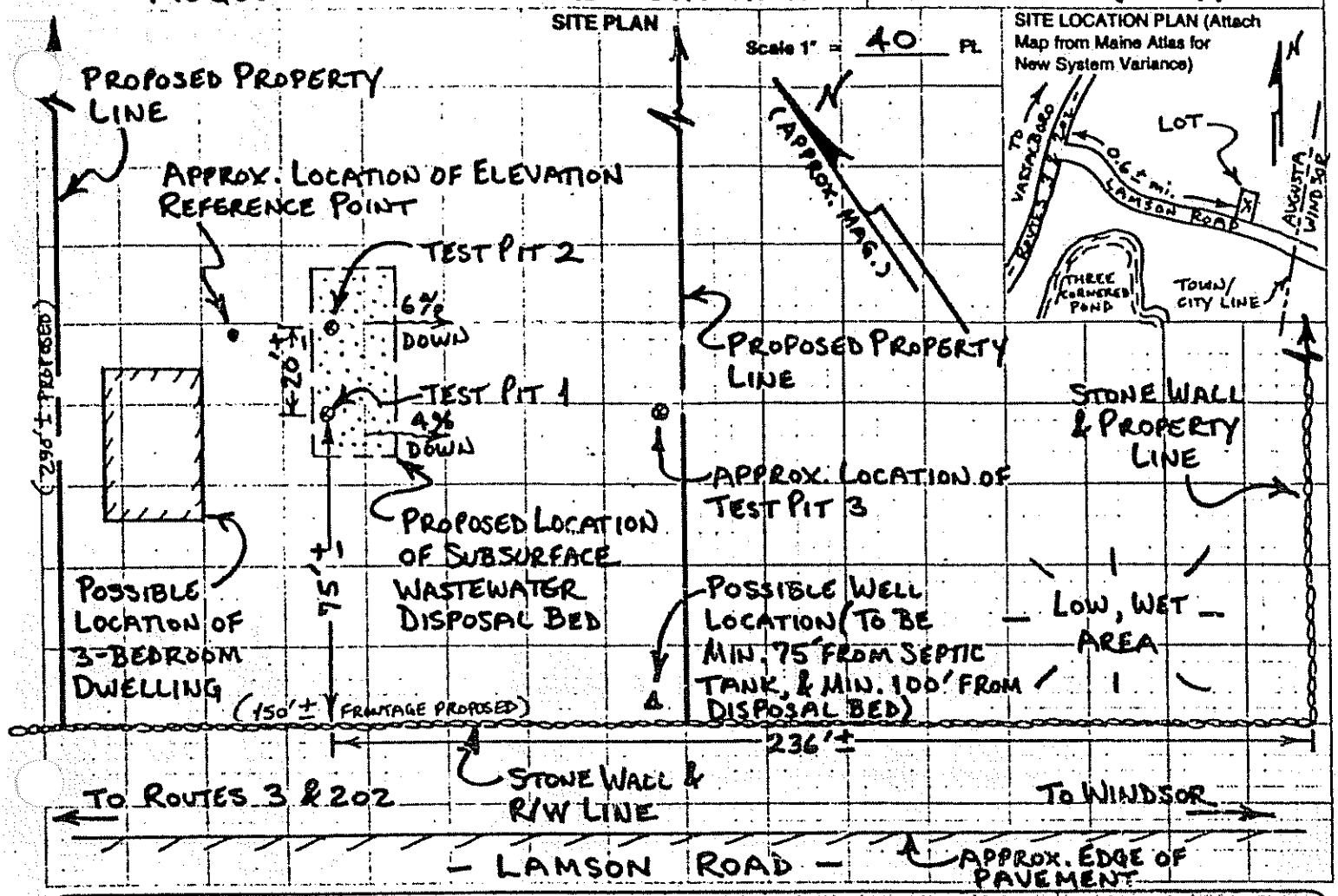

SOIL DESCRIPTION AND CLASSIFICATION (Location of Observation Holes Shown Above)

Observation Hole 1 — ☒ Test Pit ☐ Boring

2" Depth of Organic Horizon Above Mineral Soil

Depth below mineral soil surface (inches)	Texture	Consistency	Color	Mottling
0–6	FINE SANDY LOAM	FRIABLE	DARK BROWN	
6–10			STRONG BROWN	
10–15	GRAVELLY FINE SANDY LOAM		YELLOWISH BROWN	
15–20			OLIVE BROWN	
20–30		FIRM, BRITTLE	OLIVE	COMMON DISTINCT
30–50				

NOTE: TEST PIT 3 REVEALED A 9-D TYPE SOIL WITH DRAINAGE MOTTLES AT AN APPROX. DEPTH OF 8"

Soil (Profile)	Classification (Condition)	Slope	Limiting Factor
3	C	4 %	20" ☒ Ground Water ☐ Restrictive Layer ☐ Bedrock

Observation Hole 2 — ☒ Test Pit ☐ Boring

1" Depth of Organic Horizon Above Mineral Soil

Depth below mineral soil surface (inches)	Texture	Consistency	Color	Mottling
0–6	FINE SANDY LOAM	FRIABLE	DARK BROWN	
6–10			LIGHT BROWN	
10–15	GRAVELLY FINE SANDY LOAM		OLIVE	FEW FAINT
15–20		~ BEDROCK ~		
20–30				
30–50				

Soil (Profile)	Classification (Condition)	Slope	Limiting Factor
2	C/A III	6 %	15" ☒ Ground Water ☐ Restrictive Layer ☐ Bedrock

William J. Noble — Site Evaluator Signature
75 — SE#
2-28-88 — Date

87039A

87039A

SURFACE WASTEWATER DISPOSAL SYSTEM APPLICATION

Department of Human Services
Division of Health Engineering

Town, Plantation: AUGUSTA
Street, Road, Subdivision: LAMSON ROAD
Owners Name: DONALD J. GRADY, JR.

SUBSURFACE WASTEWATER DISPOSAL PLAN

Scale 1" = 20 FL

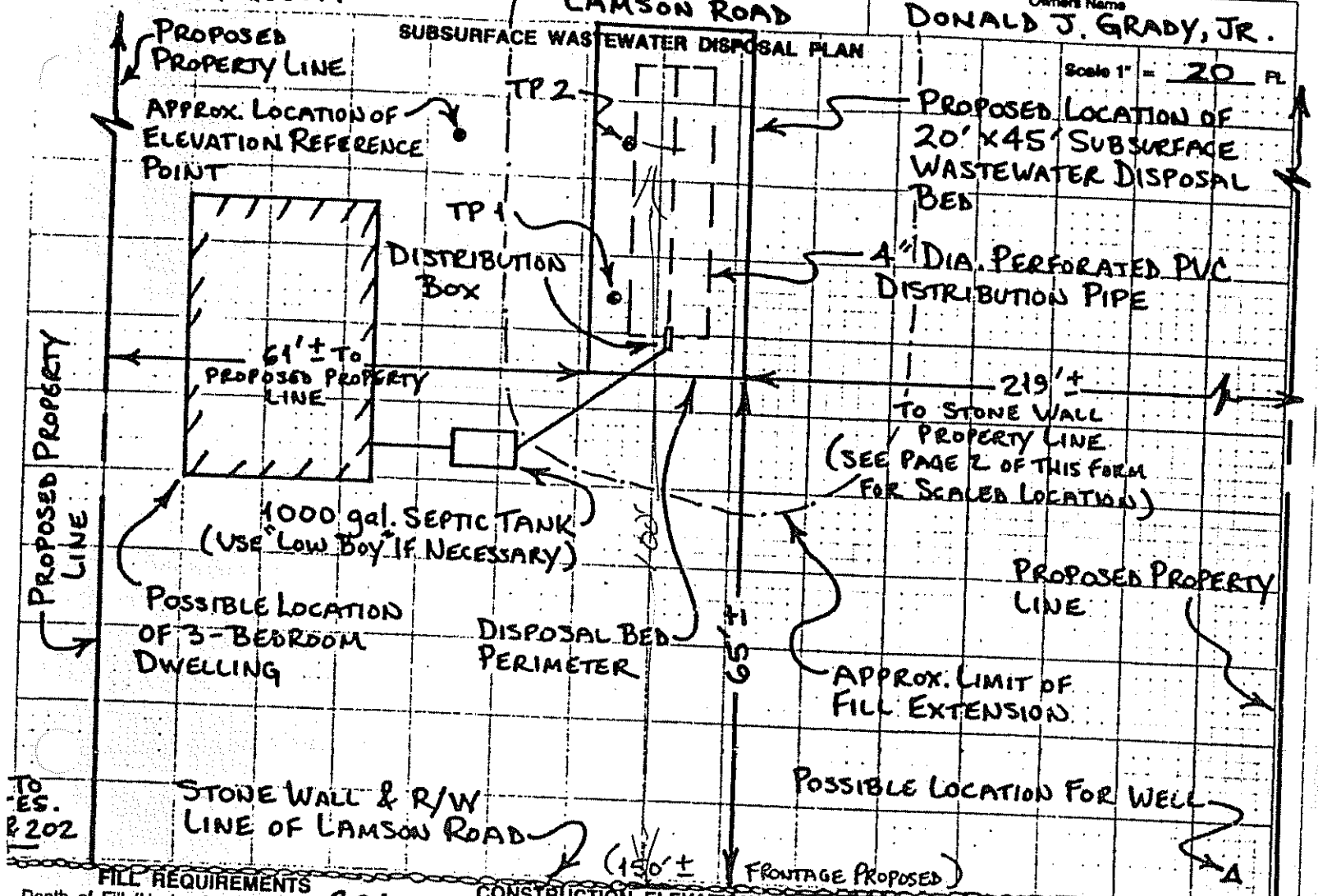

FILL REQUIREMENTS

Depth of Fill (Upslope) 30"
Depth of Fill (Downslope) 42 ±
(AT AREA OF TEST PIT 2)

CONSTRUCTION ELEVATIONS

Reference Elevation is 0.0"
Bottom of Disposal Area -60.0"
Top of Distribution Lines or Chambers -49.0"

ELEVATION REFERENCE POINT LOCATION & DESCRIPTION

NAIL WITH ORANGE FLAGGING IN WHITE PINE TREE, 54" ABOVE GROUND LEVEL AT TREE BASE.

NOTES:

1. BACKFILL & PERIMETER FILL TO BE SANDY LOAM OR COARSER.
2. GRADE LAND AROUND DISPOSAL BED TO DIVERT ANY WATER FROM AREA.
3. REMOVE ANY ORGANIC LAYER & SCARIFY THE SOIL SURFACE BEFORE INSTALLING FILL.
4. REQUIRED FILL DEPTHS MAY VARY FROM THOSE SHOWN DUE TO IRREGULARITIES IN SOIL SURFACE.
5. LOCATE TEST PITS ON THE LOT & POSITION BED OVER PITS AS SHOWN IN ABOVE PLAN.
6. REFER TO SECTIONS 11 & 12 IN THE SSWD RULES FOR FURTHER BED INSTALLATION DETAILS.

DISPOSAL AREA CROSS SECTION

Scale:
Vertical: 1 Inch = 10 FL
Horizontal: 1 Inch = 10 FL

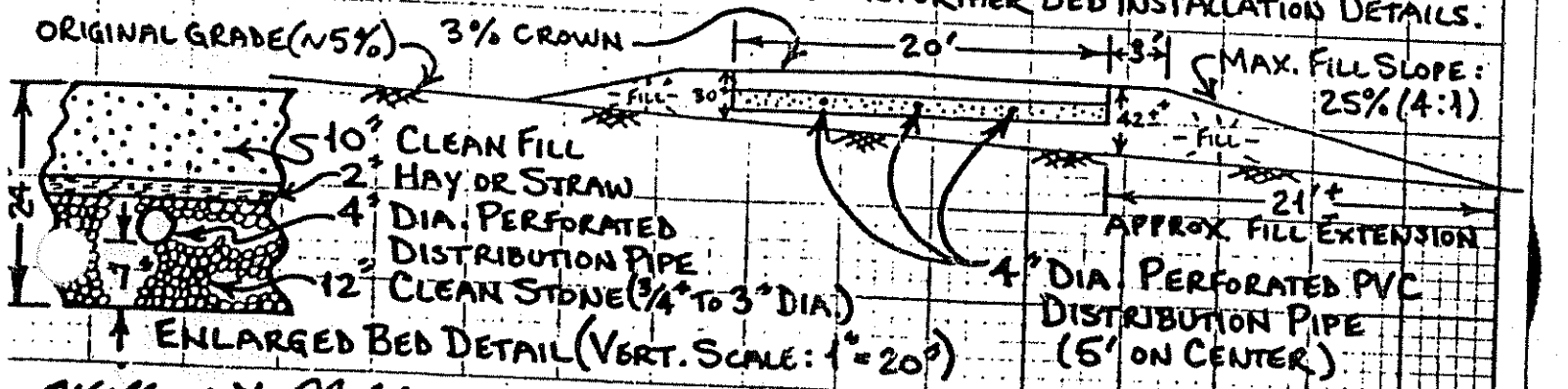

ENLARGED BED DETAIL (VERT. SCALE: 1" = 20")

William J. Noble
Site Evaluator Signature

75
SE#

2-28-88
Date