SUBSURFACE WASTEWATER DISPOSAL SYSTEM APPLICATION

Maine Department of Human Services
Division of Health Engineering, Station 10
(207)287-5672 FAX (207)287-4172

PROPERTY LOCATION

City, Town, or Plantation	AUGUSTA
Street or Road	ROUTE 3 North Belfast
Subdivision, Lot #	

>> Caution: Permit Required -- Attach in Space Below <<

AUGUSTA 4440 TOWN COPY
Date Permit Issued: 7-7-00 $ 175.00 FEE ☐ If Double Fee Charged
Local Plumbing Inspector Signature L.P.I. # 1850

OWNER/APPLICANT INFORMATION

Name (last, first, MI)	BOWEN, DARRELL	☐ Owner ☐ Applicant
Mailing Address of ■ Owner ☐ Applicant	RR 1 BOX 6090	
	AUGUSTA, ME 04330	
Daytime Tel. #	623-4164	

Municipal Tax Map # 4 Lot # 104

Owner or Applicant Statement

I state that the information submitted is correct to the best of my knowledge and understand that any falsification is reason for the Department and/or Local Plumbing Inspector to deny a Permit.

Teresa G. Bowen 7-6-2000
Signature of Owner/Applicant Date

Caution: Inspection Required

I have inspected the installation authorized above and found it to be in compliance with the Subsurface Wastewater Disposal Rules Application

Local Plumbing Inspector Signature (1st) Date Approved 7/13/00 (2nd) Date Approved

PERMIT INFORMATION

TYPE OF APPLICATION:
1. ☐ First Time System
2. ■ Replacement System
   Type Replaced PLASTIC CHAMBER
   Year Installed 1989
3. ☐ Expanded System
   a. ☐ Minor Expansion
   b. ☐ Major Expansion
4. ☐ Experimental System
5. ☐ Seasonal Conversion

SIZE OF PROPERTY
5.6 ☐ sq. ft. ■ acres

SHORELAND ZONING
☐ Yes ■ No

THIS APPLICATION REQUIRES
1. ■ No Rule Variance
2. ☐ First Time System Variance
   a. ☐ Local Plumbing Inspector approval
   b. ☐ State & Local Plumbing Inspector approval
3. ☐ Replacement System Variance
   a. ☐ Local Plumbing Inspector approval
   b. ☐ State & Local Plumbing Inspector approval
4. ☐ Minimum Lot Size Variance
5. ☐ Seasonal Conversion Variance

DISPOSAL SYSTEM TO SERVE:
1. ■ Single Family Dwelling Unit, No. of Bedrooms: 3
2. ☐ Multiple Family Dwelling Unit, No. of Units:
3. ☐ Other
   SPECIFY

DISPOSAL SYSTEM COMPONENT(S)
1. ☐ Complete Non-engineered System
2. ☐ Primitive System (graywater & alt. toilet)
3. ☐ Alternative Toilet, specify
4. ☐ Non-Engineered Treatment Tank (only)
5. ☐ Holding Tank gallons
6. ■ Non-engineered Disposal Field (only)
7. ☐ Separated Laundry System
8. ☐ Complete Engineered System (2000 gpd or more)
9. ☐ Engineered Treatment Tank (only)
10. ☐ Engineered Disposal Field (only)
11. ☐ Pretreatment, specify:
12. ☐ Miscellaneous components

TYPE OF WATER SUPPLY
1. ■ Drilled Well 2. ☐ Dug Well 3. ☐ Private
4. ☐ Public 5. ☐ Other

DESIGN DETAILS (SYSTEM LAYOUT SHOWN ON PAGE 3)

TREATMENT TANK
1. ■ Concrete
   a. ■ Regular
   b. ☐ Low Profile
2. ☐ Plastic
3. ☐ Other EXISTING

CAPACITY 1000 gallons

DISPOSAL FIELD TYPE & SIZE
1. ■ Stone Bed 2. ☐ Stone Trench
3. ☐ Proprietary Device
   a. ☐ Cluster Array c. ☐ Linear
   b. ☐ Regular load d. ☐ H-20 load
4. ☐ Other

SIZE 900 ■ sq. ft. ☐ lin. ft.

GARBAGE DISPOSAL UNIT
1. ■ No 3. ☐ Maybe
2. ☐ Yes >> Specify one below:
   a. ☐ Multi-compartment Tank
   b. ☐ Tanks in Series
   c. ☐ Increase in Tank Capacity
   d. ☐ Filter on Tank Outlet

DESIGN FLOW
270 gallons per day
BASED ON:
1. ■ Table 501.1 (dwelling unit(s)
2. ☐ Table 501.2 (other facilities)
SHOW CALCULATIONS
-for other facilities-
3. ☐ Section 503.0 (meter readings)
ATTACH WATER-METER DATA

SOIL DATA & DESIGN CLASS
PROFILE / CONDITION / DESIGN
3 / C / 1
at Observation Hole # TP-1
Depth 15 " Elevation " OF MOST LIMITING SOIL FACTOR

DISPOSAL FIELD SIZING
1. ☐ Small - 2.0 sq. ft./gpd
2. ☐ Medium - 2.6 sq. ft./gpd
3. ■ Medium-Large - 3.3 sq. ft./gpd
4. ☐ Large - 4.1 sq. ft./gpd
5. ☐ Extra-Large - 5.0 sq. ft./gpd

PUMPING
1. ■ Not Required
2. ☐ May Be Required
3. ☐ Required>> Specify only for engineered or experimental systems
DOSE gallons

SITE EVALUATOR'S STATEMENT

I certify that on 6/30/2000 (date) I completed a site evaluation on this property and state that the data reported are accurate and the proposed system is in compliance with the State of Maine Subsurface Wastewater Disposal Rules (10-144A CMR 241).

William P Brown 188 6/30/2000
Site Evaluator Signature SE# Date

WILLIAM P BROWN 293-2110
Site Evaluator Name Printed Telephone #

SUBSURFACE WASTEWATER DISPOSAL SYSTEM APPLICATION

Department of Human Services
Division of Health Engineering
(207) 287-5672 FAX 207 287-4172

Town, City, Plantation	Street, Road, Subdivision	Owners Name
AUGUSTA	ROUTE 3	DARRELL BOWEN

SITE PLAN

Scale 1" = 100 Ft.

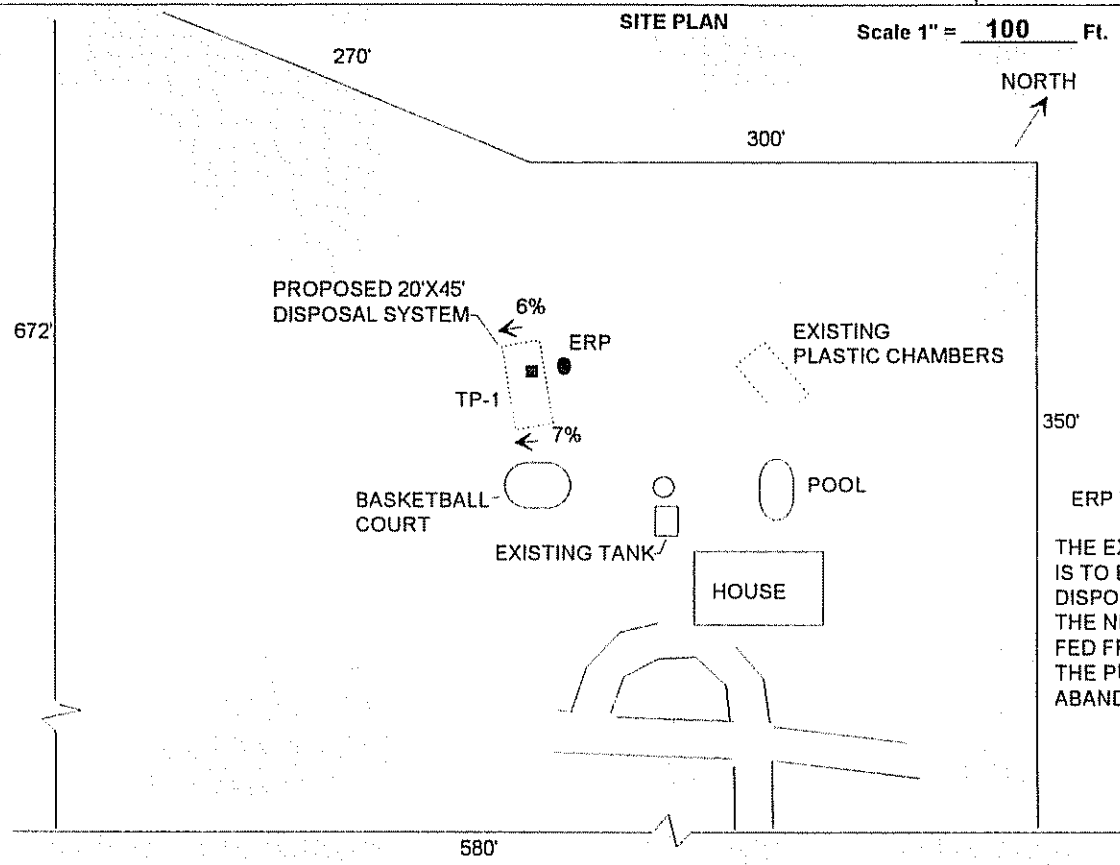

SITE LOCATION PLAN
(Map from Maine Atlas recommended)

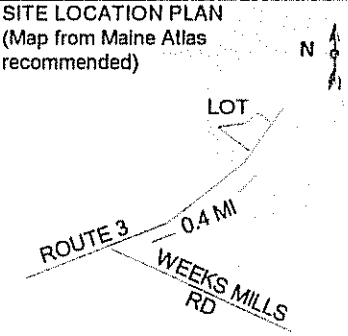

ERP TO TP-1 = 18'

THE EXISTING PLASTIC CHAMBER SYSTEM IS TO BE REPLACED WITH A STONE DISPOSAL SYSTEM
THE NEW SYSTEM WILL BE GRAVITY FED FROM THE SEPTIC TANK
THE PUMP STATION IS TO BE PROPERLY ABANDONED

SOIL DESCRIPTION AND CLASSIFICATION (Location of Observation Holes Shown Above)

Observation Hole TP-1 ■ Test Pit ☐ Boring

0 " Depth of Organic Horizon Above Mineral Soil

DEPTH BELOW MINERAL SOIL SURFACE (Inches)

Texture	Consistancy	Color	Mottling
SANDY LOAM	FRIABLE	MED BRN	
		YELLOW BROWN	
		LIGHT BROWN	NONE
			COMMON
	FIRM	OLIVE BRN	

Soil Classification		Slope	Limiting Factor	
3	C	6-7 %	15 "	■ Ground Water ☐ Restrictive Layer ☐ Bedrock ☐ Pit Depth
Profile	Condition			

Observation Hole _____ ☐ Test Pit ☐ Boring

" Depth of Organic Horizon Above Mineral Soil

DEPTH BELOW MINERAL SOIL SURFACE (Inches)

Texture	Consistancy	Color	Mottling

Soil Classification		Slope	Limiting Factor	
		%	"	☐ Ground Water ☐ Restrictive Layer ☐ Bedrock ☐ Pit Depth
Profile	Condition			

WILLIAM P BROWN
Site Evaluator Signature

188
SE #

6/30/2000
Date

SUBSURFACE WASTEWATER DISPOSAL SYSTEM APPLICATION

Department of Human Services
Division of Health Engineering

Town, City, Plantation	Street, Road, Subdivision	Owners Name
AUGUSTA	ROUTE 3	DARRELL BOWEN

SUBSURFACE WASTEWATER DISPOSAL PLAN

Scale 1" 20 Ft.

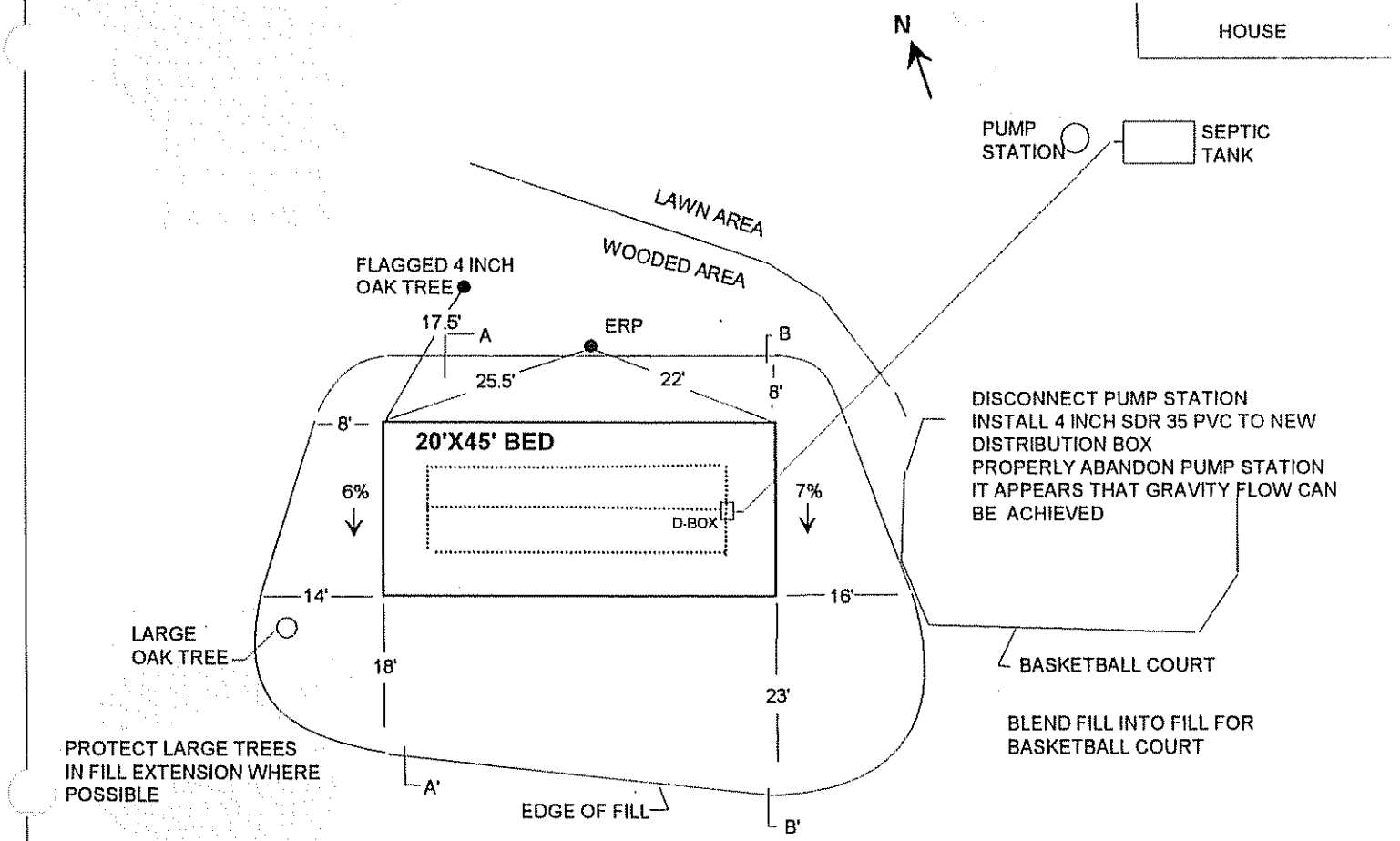

FILL REQUIREMENTS

Depth of Fill (Upslope)	23-26"
Depth of Fill (Downslope)	36-40"

CONSTRUCTION ELEVATIONS

Reference Elevation is	00"
Bottom of Disposal Area	-60"
Top of distribution Lines or Chambers	-49"

ELEVATION REFERENCE POINT LOCATION & DESCRIPTION

FLAGGED NAIL IN 20 INCH RED OAK, 4 FEET ABOVE GROUND

DISPOSAL AREA CROSS SECTION

Scale:

Vertical: 1 Inch = 5 Ft.
Horizontal: 1 Inch = 10 Ft.

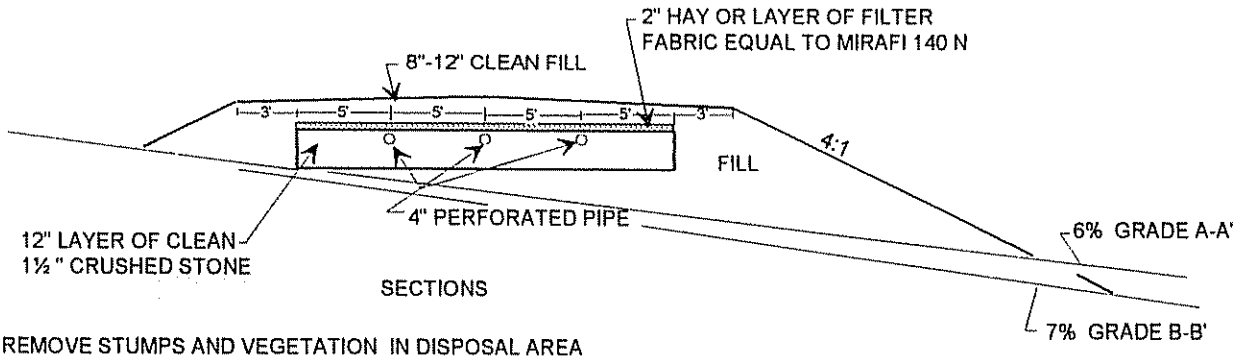

REMOVE STUMPS AND VEGETATION IN DISPOSAL AREA
SCARIFY ENTIRE FILL AREA
MIX 4 INCHES OF FILL MATERIAL WITH ORIGINAL SOIL TO FORM A TRANSITION ZONE (ACCORDING TO CHAPTER 8 OF THE PLUMBING CODE)
ALL FILL SHALL BE GRAVELLY COARSE SAND
CROWN FINISH GRADE FROM CENTER AT 3% OR SLOPE FINISH GRADE ALL ONE WAY
LOAM, SEED, MULCH DISTURBED AREAS

WILLIAM P BROWN	188	6/30/2000
Site Evaluator Signature	SE #	Date