RP/LR/RL ES

622-6595 called 6-2-93 10:00

M3 L28

Department of Human Services
Division of Health Engineering
(207)289-3826

SUBSURFACE WASTEWATER DISPOSAL SYSTEM APPLICATION

PROPERTY ADDRESS

Town Or Plantation	AUGUSTA 3/25
Street /ision Lot #	CHURHILL ROAD

PROPERTY OWNERS NAME

Last: BROWN First: KEITH

Applicant Name:	Keith Brown
Mailing Address of Owner/Applicant (If Different)	440 CHURHILL ROAD AUGUSTA ME 04330

AUGUSTA 2693 TOWN COPY
Date Permit Issued: 6 3 93 $ 100.00 FEE ☐ If Double Fee Charged
Local Plumbing Inspector Signature L.P.I. # 180

8/12/97 Water installed, new permit #3756 issued 8/12/97

Owner/Applicant Statement

I certify that the Information submitted is correct to the best of my knowledge and understand that any falsification is reason for the Local Plumbing Inspector to deny a Permit.

Keith Brown 6-2-93
Signature of Owner/Applicant Date

Caution: Inspection Required

I have inspected the installation authorized above and found it to be in compliance with the Subsurface Wastewater Disposal Rules.

Local Plumbing Inspector Signature Date Approved

PERMIT INFORMATION

THIS APPLICATION IS FOR:
1. ☒ NEW SYSTEM
2. ☐ REPLACEMENT SYSTEM
3. ☐ EXPANDED SYSTEM
4. ☐ EXPERIMENTAL SYSTEM

SEASONAL CONVERSION
to be completed by the LPI
5. ☐ SYSTEM COMPLIES WITH RULES
6. ☐ CONNECTED TO SANITARY SEWER
7. ☐ SYSTEM INSTALLED – P# _____
8. ☐ SYSTEM DESIGN RECORDED AND ATTACHED

THIS APPLICATION REQUIRES:
1. ☒ NO RULE VARIANCE
2. ☐ NEW SYSTEM VARIANCE Attach New System Variance Form
3. ☐ REPLACEMENT SYSTEM VARIANCE Attach Replacement System Variance Form
a. ☐ Requiring Local Plumbing Inspector Approval
b. ☐ Requires State and Local Plumbing Inspector Approval
4. ☐ MINIMUM LOT SIZE VARIANCE

INSTALLATION IS:
COMPLETE SYSTEM
1. ☒ NON-ENGINEERED SYSTEM
2. ☐ PRIMITIVE SYSTEM (Includes Alternative Toilet)
3. ☐ ENGINEERED (+2000 gpd)

INDIVIDUALLY INSTALLED COMPONENTS:
4. ☐ TREATMENT TANK (ONLY)
5. ☐ HOLDING TANK _____ GAL
6. ☐ ALTERNATIVE TOILET (ONLY)
7. ☐ NON-ENGINEERED DISPOSAL AREA (ONLY)
8. ☐ ENGINEERED DISPOSAL AREA (ONLY)
9. ☐ SEPARATED LAUNDRY SYSTEM

IF REPLACEMENT SYSTEM:
YEAR FAILING SYSTEM INSTALLED _____
THE FAILING SYSTEM IS:
1. ☐ BED 3. ☐ TRENCH
2. ☐ CHAMBER 4. ☐ OTHER: _____

DISPOSAL SYSTEM TO SERVE:
1. ☐ SINGLE FAMILY DWELLING
2. ☐ MODULAR OR MOBILE HOME
3. ☐ MULTIPLE FAMILY DWELLING
4. ☒ OTHER GARAGE PLUS (B.R. APARTMENT) SPECIFY

SIZE OF PROPERTY: 1+ACRE
ZONING: RESIDENTIAL AGRICULTURE
TYPE OF WATER SUPPLY: PROPOSED DRILLED WELL

DESIGN DETAILS (SYSTEM LAYOUT SHOWN ON PAGE 3)

TREATMENT TANK
1. ☒ SEPTIC: ☒ Regular ☐ Low Profile
2. ☐ AEROBIC
SIZE: 1000 GALS.

WATER CONSERVATION
1. ☒ NONE
2. ☐ LOW VOLUME TOILET
3. ☐ SEPARATED LAUNDRY SYSTEM
4. ☐ ALTERNATIVE TOILET
SPECIFY: _____

PUMPING
1. ☒ NOT REQUIRED
2. ☐ MAY BE REQUIRED (DEPENDING ON TREATMENT TANK LOCATION AND ELEVATION)
3. ☐ REQUIRED
DOSE: _____ GALS.

CRITERIA USED FOR DESIGN FLOW (BEDROOMS, SEATING, EMPLOYEES, WATER RECORDS, ETC.)
PRIVATE GARAGE WITH ONE BEDROOM APARTMENT - USING 2 B.R. SINGLE FAMILY DWELLING - MINIMUM FLOW
DESIGN FLOW: 180 (GALLONS/DAY)

SOIL CONDITIONS USED FOR DESIGN PURPOSES

PROFILE	CONDITION
3	C

DEPTH TO LIMITING FACTOR: 20.

SIZE RATINGS USED FOR DESIGN PURPOSES
1. ☐ SMALL
2. ☐ MEDIUM
3. ☒ MEDIUM-LARGE
4. ☐ LARGE
5. ☐ EXTRA LARGE

DISPOSAL AREA TYPE/SIZE
1. ☒ BED _____ Sq. Ft.
2. ☒ CHAMBER 306 Sq. Ft.
☒ REGULAR ☐ H-20
3. ☐ TRENCH _____ Linear Ft.
4. ☒ OTHER: 12 INFILTRATORS 2 ROWS OF SIX

SITE EVALUATOR STATEMENT – DESIGN SUBJECT TO LOCAL, STATE AND FEDERAL ORDINANCES

On 5/28/93 (date) I conducted a site evaluation for this project and certify that the data reported is accurate. The system I propose is in accordance with the Subsurface Wastewater Disposal Rules.

Site Evaluator Signature SE# 168 Date 6-1-93

(Local Plumbing Inspector's Signature if permit is for Seasonal Conversion.)

SUBSURFACE WASTEWATER DISPOSAL SYSTEM APPLICATION

Department of Human Services
Division of Health Engineering

Town, City, Plantation	Street, Road, Subdivision	Owners Name
AUGUSTA	CHURCHILL ROAD	KEITH BROWN

SITE PLAN

Scale 1" = 60 Ft.

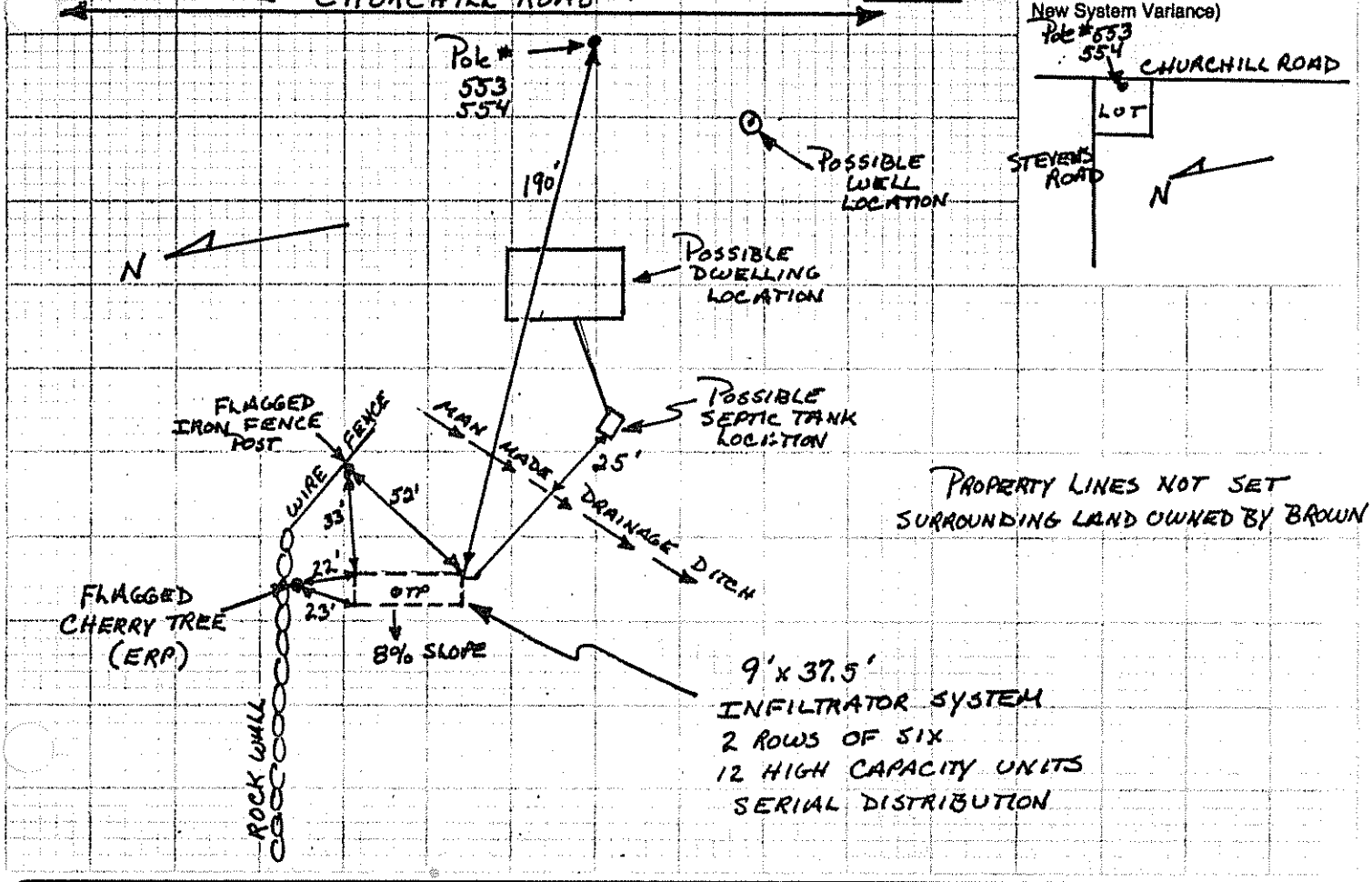

SITE LOCATION PLAN (Attach Map from Maine Atlas for New System Variance)

SOIL DESCRIPTION AND CLASSIFICATION (Location of Observation Holes Shown Above)

Observation Hole TP 1 ☒ Test Pit ☐ Boring

ONE " Depth of Organic Horizon Above Mineral Soil

DEPTH BELOW MINERAL SOIL SURFACE (Inches)

Texture	Consistency	Color	Mottling
LOAM		BROWN	
SANDY LOAM	FRIABLE	DARK YELLOW BROWN	
		LIGHT YELLOW BROWN	
		OLIVE BROWN	COMMON DISTINCT
	FIRM		

Soil	Classification	Slope	Limiting Factor	
3 (Profile)	C (Condition)	8 %	20 "	☒ Ground Water ☐ Restrictive Layer ☐ Bedrock

Observation Hole _____ ☐ Test Pit ☐ Boring

_____ " Depth of Organic Horizon Above Mineral Soil

DEPTH BELOW MINERAL SOIL SURFACE (Inches)

Texture	Consistency	Color	Mottling

Soil	Classification	Slope	Limiting Factor	
(Profile)	(Condition)	%	"	☐ Ground Water ☐ Restrictive Layer ☐ Bedrock

Site Evaluator Signature _____ SE# 168 Date 6-1-93

HHE-200 Rev.1/84

SUBSURFACE WASTEWATER DISPOSAL SYSTEM APPLICATION

Department of Human Services
Division of Health Engineering

Town, City, Plantation	Street, Road, Subdivision	Owners Name
AUGUSTA	CHURCHILL ROAD	KEITH BROWN

SUBSURFACE WASTEWATER DISPOSAL PLAN

Scale 1" = 20 Ft.

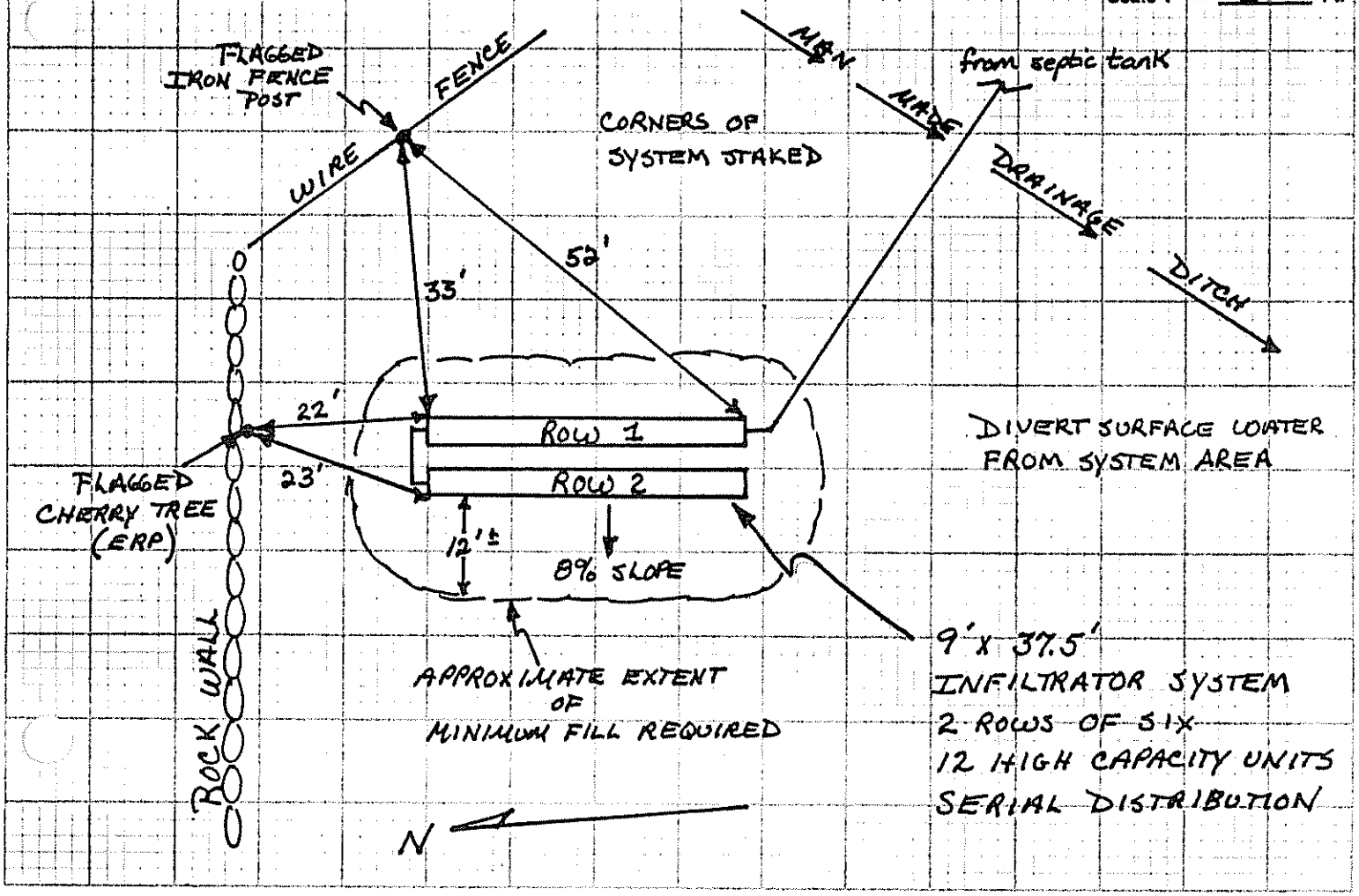

FILL REQUIREMENTS

Depth of Fill (Upslope) 16"
Depth of Fill (Downslope) 19±"

CONSTRUCTION ELEVATIONS

Reference Elevation is 0
Bottom of Disposal Area - SEE ATTACHED DIAGRAM
Top of Distribution Lines or Chambers AND BELOW

ELEVATION REFERENCE POINT LOCATION & DESCRIPTION (ERP)
FLAGGED NAIL IN FLAGGED CHERRY TREE 39" ABOVE EXISTING GRADE AT TREE

~~DISPOSAL AREA CROSS SECTION~~

Scale: N/A
Vertical: 1 inch = Ft.
Horizontal: 1 inch = Ft.

CONSTRUCTION ELEVATIONS:

	BOTTOM OF TRENCH	TOP OF INFILTRATOR
ROW 1	-52"	-36"
ROW 2	-58"	-42"

Site Evaluator Signature

168
SE#

6-1-93
Date

INFILTRATOR CROSS SECTION 8%

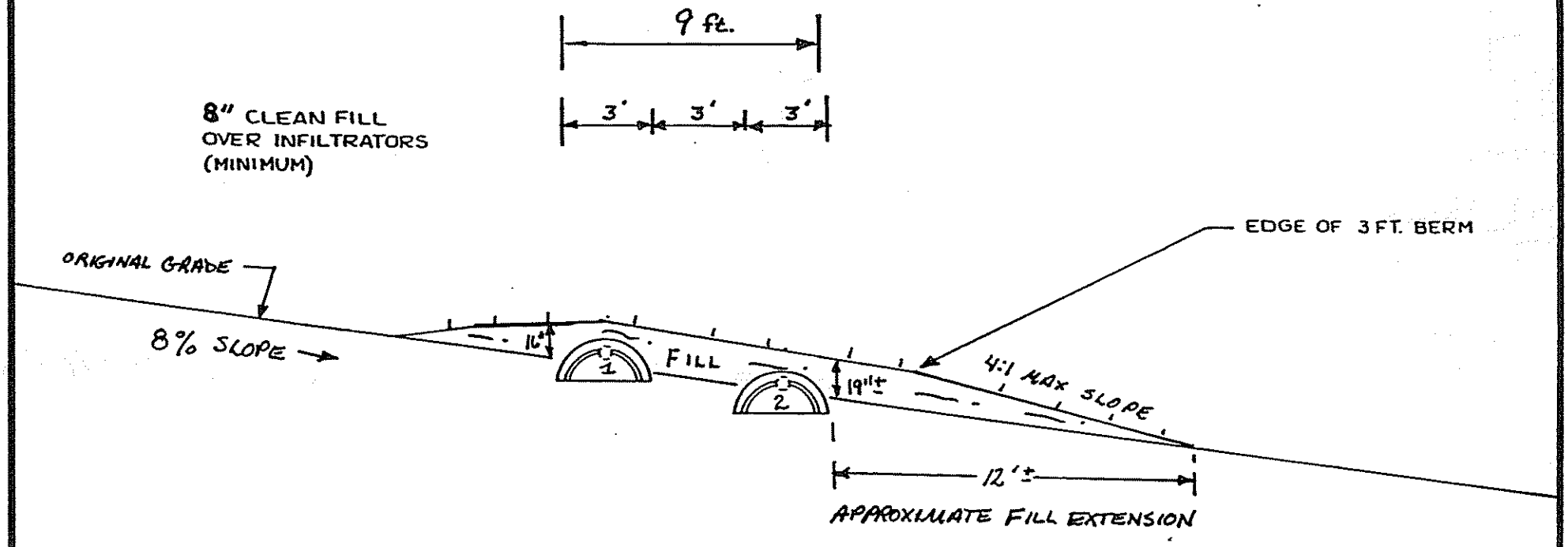

NOTES:

1. REMOVE VEGETATION AND SCARIFY ORIGINAL SOIL UNDER INFILTRATORS AND FILL EXTENSION AREAS.
2. BOTTOM OF INFILTRATORS TO BE LEVEL WITH A MAXIMUM GRADE TOLERANCE OF 1" PER 100'.
3. PROVIDE FOR SURFACE DRAINAGE AWAY FROM INFILTRATOR AREA.
4. FINISHED GRADE SHALL BE SEEDED AND MULCHED TO PREVENT EROSION.

ORIGINAL GRADE

FILL UNDER INFILTRATORS TO BE GRAVELLY LOAMY COARSE SAND TEXTURE.

FILL AROUND INFILTRATORS TO BE GRAVELLY LOAMY COARSE SAND TEXTURE.

SITE EVALUATOR: JOHN W. LORD JR SE #168			
OWNER: KEITH BROWN		NUMBER OF INFILTRATORS: 2 ROWS OF SIX 12	PERCENT SLOPE: 8%
LOCATION: AUGUSTA		ELEVATIONS: REFERENCE PT. 0	BOTTOM TRENCH #1 -52"
DATE: 6-1-93	SCALE: 1 INCH = 5 FEET	BOTTOM TRENCH #2 -58"	