REPLACEMENT SYSTEM VARIANCE REQUEST

Town

THE LIMITATIONS OF THE REPLACEMENT SYSTEM VARIANCE REQUEST

This form shall be attached to an application (HHE-200) for the proposed replacement system which requires a variance to the Rules. The LPI shall review the Replacement System Variance Request and HHE-200 and may approve the Request if all of the following requirements can be met, and the variance(s) requested fall within the limits of the LPI's authority.

1. The proposed design meets the definition of a Replacement System as defined in the Rules (Sec. 2006)
2. There will be no change in use of the structure except as authorized for one-time exempted expansions outside the shoreland zone of major waterbodies/courses.
3. The replacement system is determined by the Site Evaluator and LPI to be the most practical method to treat and dispose of the wastewater.
4. The BOD_5 plus S. S. content of the wastewater is no greater than that of normal domestic effluent.

GENERAL INFORMATION

Town of AUGUSTA

Permit No. 7074

Date Permit Issued 6/10/03

Property Owner's Name: ROSANNE FLORES

Tel. No.: 242-6227

System's Location: CHURCH HILL ROAD AUGUSTA

Property Owner's Address: 108 WATER STREET

(If different from above) HALLOWELL, ME 04347

SPECIFIC INSTRUCTIONS TO THE:
LOCAL PLUMBING INSPECTOR (LPI):

If any of the variances exceed your approval authority and/or do not meet all the requirements listed under the Limitations Section above, then you are to send this Replacement System Variance Request, along with the Application, to the Department for review and approval consideration before issuing a Permit. (See reverse side for Comments Section and your signature.)

SITE EVALUATOR:

If after completing the Application, you find the a variance for the proposed replacement system is needed, complete the Replacement System Variance Request with your signature on reverse side of form.

PROPERTY OWNER:

It has been determined by the Site Evaluator that a variance to the Rules is required for the proposed replacement system. This variance request is due to physical limitations of the site and/or soil conditions. Both the Site Evaluator and the LPI have considered the site/soil restrictions and have concluded that a replacement system in total compliance with the Rules is not possible.

PROPERTY OWNER:

I understand that the proposed system requires a variance to the Rules. Should the proposed system malfunction, I release all concerned provided they have performed their duties in a reasonable and proper manner, and I will promptly notify the Local Plumbing Inspector and make any corrections required by the Rules. By signing the variance request form, I acknowledge permission for representatives of the Department to enter onto the property to perform such duties as may be necessary to evaluate the variance request.

Rosanne R. Flores — SIGNATURE OF OWNER

06/10/03 — DATE

LOCAL PLUMBING INSPECTOR:

I, Gary R. Smith, the undersigned, have visited the above property and have determined to the best of my knowledge that it cannot be installed in compliance with the Rules. As a result of my review of the Replacement Variance Request, the Application, and my on-site investigation, I (check and complete either a or b):

☐ a. (☑approve, ☐disapprove) the variance request based on my authority to grant this variance. Note: If the LPI does not give his approval, he shall list his reasons for denial in Comments Section below and return to the Applicant. --OR--

☐ b. find that one or more of the requested Variances exceeds my approval authority as LPI. I (☑ recommend ☐ do not recommend) the Department's approval of the variances. Note: If the LPI does not recommend the Department's approval he/she shall state his/her reasons in Comments Section below as to why the proposed replacement system is not being recommended.

Comments

Gary R. Smith — LPI SIGNATURE

6/10/03 — DATE

HHE-204 Rev 10/02

Replacement System Variance Request

VARIANCE CATEGORY	LIMIT OF LPI'S APPROVAL AUTHORITY						VARIANCE REQUESTED TO:	
SOILS								
Soil Profile								
Soil Condition	Ground Water Table			to 7"			9 inches	
from HHE-200	Restrictive Layer			to 7"			inches	
	Bedrock			to 12"			inches	
SETBACK DISTANCES (In feet)	Disposal Fields (total design flow)			Septic Tanks (total design flow)			Disposal Fields	Septic Tanks
from	Less than 1000 gpd	1000 to 2000 gpd	Over 2000 gpd	Less than 1000 gpd	1000 to 2000 gpd	Over 2000 gpd	To	To
Wells with water usage of 2000 or more gpd or public water supply wells	300 ft	300 ft	300 ft	100 ft	100 ft	100 ft		
Owner's wells	100 down to 60 ft[a]	200 down to 100 ft	300 down to 150 ft	100 down to 50 ft[b]	100 down to 50 ft	100 down to 50 ft	72'	
Neighbor's wells	100 down to 60 ft [f]	200 down to 120 ft [f]	300 down to 180 ft [f]	100 down to 50 ft [f]	100 down to 75 ft [f]	100 down to 75 ft [f]		
Water supply line	10 ft [h]	20 ft [h]	25 ft [h]	10 ft [h]	10 ft [h]	10 ft [h]		
Water course, major - for replacements only, see Table 400.4 for major expansions	100 down to 60 ft[d]	200 down to 120 ft[d]	100 down to 180 ft[d]	100 down to 50 ft[b]	100 down to 50 ft	100 down to 50 ft		
Water course, minor	50 down to 25 ft [e]	100 down to 50 ft [e]	150 down to 75 ft [e]	50 down to 25 ft [e]	50 down to 25 ft [e]	50 down to 25 ft [e]		
Drainage ditches	25 down to 12 ft	50 down to 25 ft	75 down to 35 ft	25 down to 12 ft	25 down to 12 ft	25 down to 12 ft		
Edge of fill extension -- Coastal wetlands, special freshwater wetlands, great ponds, rivers, streams	25 ft [e]	25 ft [e]	25 ft [e]	25 ft [e]	25 ft [e]	25 ft [e]		
Slopes greater than 3:1	10 ft [g]	18 ft [g]	25 ft [g]	N/A	N/A	N/A		
No full basement (e.g. slab, frost wall, columns)	15 down to 7 ft	30 down to 15 ft	40 down to 20 ft	8 down to 5 ft	14 down to 7 ft	20 down to 10 ft		
Full basement (below grade foundation)	20 down to 10 ft	30 down to 15 ft	40 down to 20 ft	8 down to 5 ft	14 down to 7 ft	20 down to 10 ft		
Property lines	10 down to 5 ft[c]	18 down to 9 ft[c]	20 down to 10 ft[c]	10 down to 4 ft[c]	15 down to 7 ft[c]	20 down to 10 ft[c]		
Burial sites or graveyards, measured from the downhill toe of the fill extension	25 ft	25 ft	25 ft	25 ft	25 ft	25 ft		

OTHER

1. Fill extension Grade - to 3:1
2.
3.

Footnotes: [a] Single-family well setbacks may be reduced as prescribed in Section 701.2
[b] This distance may be reduced to 25 feet, if the septic tank or holding tank is tested in the plumbing inspector's presence and shown to be watertight or of monolithic construction.
[c] Additional setbacks may be needed to prevent fill material extensions from encroaching on abutting property.
[d] Additional setbacks may be required by local Shoreland zoning.
[e] Natural Resources Protection Act requires a 25 foot setback on slopes of less than 20%, from the edge of soil disturbance and 100 feet on slopes greater than 20%. See Chapter 15.
[f] May not be any closer to neighbor's well then the existing disposal field or septic tank unless written permission is granted by the neighbor. This setback may be reduced for single family houses with Department approval. See Section 702.3.
[g] The fill extension shall reach the existing ground before the 3:1 slope or within 100 feet of the disposal field.
[h] See Section 1402.10 for special procedures when these minimum setbacks cannot be achieved.

WILLIAM P BROWN
SITE EVALUATOR'S SIGNATURE

5/1/2003
DATE

FOR USE BY THE DEPARTMENT ONLY

The Department has reviewed the variance(s) and (☐does ☐does not) give its approval. Any additional requirements, recommendations, or reasons for the Variance denial, are given in the attached letter.

SIGNATURE OF THE DEPARTMENT

DATE

SUBSURFACE WASTEWATER DISPOSAL SYSTEM APPLICATION

Maine Department of Human Services
Division of Health Engineering, 10SHS
(207)287-5672 FAX (207)287-3165

>> CAUTION: PERMIT REQUIRED -- ATTACH IN SPACE BELOW <<

AUGUSTA
Date Permit Issued: 6/10/03
Local Plumbing Inspector Signature
5094 TOWN COPY
$ 95.00 FEE
☐ If Double Fee Charged
L.P.I. # 1850

PROPERTY LOCATION

City, Town, or Plantation: AUGUSTA

Street or Road: 843 CHURCH HILL ROAD

Subdivision, Lot #:

OWNER/APPLICANT INFORMATION

Name (last, first, MI): FLORES, ROSANNE ☒ Owner ☐ Applicant

Mailing Address of Owner/Applicant: 108 WATER STREET
HALLOWELL, ME 04347

Daytime Tel. #: 242-6227

Municipal Tax Map # 3 Lot # 20A

OWNER OR APPLICANT STATEMENT
I state that the information submitted is correct to the best of my knowledge and understand that any falsification is reason for the Department and/or Local Plumbing Inspector to deny a Permit.
Mark W. Flores 6/10/03
Signature of Owner/Applicant Date

CAUTION: INSPECTION REQUIRED
I have inspected the installation authorized above and found it to be in compliance with the Subsurface Wastewater Disposal Rules Application.
Local Plumbing Inspector Signature
(1st) Date Approved 6/10/03
(Final) Date Approved

PERMIT INFORMATION

TYPE OF APPLICATION
- ☐ 1. First Time System
- ☒ 2. Replacement System
  - Type replaced TRENCH
  - Year Installed 1960
- ☐ 3. Expanded System
  - ☐ a. Minor Expansion
  - ☐ b. Major Expansion
- ☐ 4. Experimental System
- ☐ 5. Seasonal Conversion

THIS APPLICATION REQUIRES
- ☐ 1. No Rule Variance
- ☐ 2. First Time System Variance
  - ☐ a. Local Plumbing Inspector approval
  - ☐ b. State & Local Plumbing Inspector approval
- ☒ 3. Replacement System Variance
  - ☒ a. Local Plumbing Inspector approval
  - ☐ b. State & Local Plumbing Inspector approval
- ☐ 4. Minimum Lot Size Variance
- ☐ 5. Seasonal Conversion Permit

DISPOSAL SYSTEM COMPONENTS
- ☐ 1. Complete Non-engineered System
- ☐ 2. Primitive System (graywater & alt. toilet)
- ☐ 3. Alternative Toilet, specify ____
- ☐ 4. Non-Engineered Treatment Tank (only)
- ☐ 5. Holding Tank ____ gallons
- ☒ 6. Non-engineered Disposal Field (only)
- ☐ 7. Separated Laundry System
- ☐ 8. Complete Engineered System (2000 gpd or more)
- ☐ 9. Engineered Treatment Tank (only)
- ☐ 10. Engineered Disposal Field (only)
- ☐ 11. Pretreatment, specify: ____
- ☒ 12. Miscellaneous Components

SIZE OF PROPERTY
3.4 ☐ sq. ft. ☒ acres

SHORELAND ZONING
☐ Yes ☒ No

DISPOSAL SYSTEM TO SERVE:
- ☒ 1. Single Family Dwelling Unit, No. of Bedrooms: 4
- ☐ 2. Multiple Family Dwelling Unit, No. of Units: ____
- ☐ 3. Other ____ (specify)

Current Use ☐ Seasonal ☒ Year Round ☐ Undeveloped

TYPE OF WATER SUPPLY
☒ 1. Drilled Well ☐ 2. Dug Well ☐ 3. Private ☐ 4. Public ☐ 5. Other

DESIGN OF SOLID SYSTEM LAYOUT SHOWN ON PAGE 3

TREATMENT TANK
- ☒ 1. Concrete
  - ☒ a. Regular
  - ☐ b. Low Profile (IF NEEDED)
- ☐ 2. Plastic
- ☐ 3. Other EXISTING

CAPACITY 1000 GAL.

DISPOSAL FIELD TYPE & SIZE
- ☒ 1. Stone Bed ☐ 2. Stone Trench
- ☐ 3. Proprietary Device
  - ☐ a. cluster array ☐ c. Linear
  - ☐ b. regular load ☐ d. H-20 load
- ☐ 4. Other ____

SIZE 1480 ☒ sq. ft. ☐ lin. ft.

GARBAGE DISPOSAL UNIT
1. ☒ No 3. ☐ Maybe
2. ☐ Yes>>Specify one below
   - ☐ a. multi-compartment tank
   - ☐ b. ___ tanks in series
   - ☐ c. increase in tank capacity
   - ☐ d. Filter on Tank Outlet

DESIGN FLOW
360 gallons per day
BASED ON
- ☒ 1. Table 501.1 (dwelling unit(s))
- ☐ 2. Table 501.2 (other facilities)

SHOW CALCULATIONS -for other facilities-

☐ 3. Section 503.0 (meter readings)
ATTACH WATER METER DATA

SOIL DATA & DESIGN CLASS
PROFILE CONDITION DESIGN
B / D / 3
at Observation Hole #TP-1
Depth 9"
of Most Limiting Soil Factor

DISPOSAL FIELD SIZING
1. ☐ Small - 2.0 sq. ft./gpd
2. ☐ Medium - 2.6 sq. ft./gpd
3. ☐ Medium-Large - 3.3 sq. ft./gpd
4. ☒ Large - 4.1 sq. ft./gpd
5. ☐ Extra-Large - 5.0 sq. ft./gpd

EFFLUENT/EJECTOR PUMP
1. ☐ Not Required
2. ☒ May Be Required
3. ☐ Required>> Specify only for engineered or experimental systems
   DOSE ____ gallons

SITE EVALUATOR'S STATEMENT

I certify that on 4/30/03 (date) I completed a site evaluation on this property and state that the data reported are accurate and that the proposed system is in compliance with the State of Maine Subsurface Wastewater Disposal Rules (10-144A CMR 241).

William P Brown — Site Evaluator Signature
188 — SE#
5/1/2003 — Date
WILLIAM P BROWN — Site Evaluator Name Printed
293-2110 — Telephone Number
E-mail Address

Note: Changes to or deviations from the design should be confirmed with the Site Evaluator.

SUBSURFACE WASTEWATER DISPOSAL SYSTEM APPLICATION

Maine Department of Human Services
Division of Health Engineering, Station 10
(207) 287-5672 FAX 287-4165

Town, City, Plantation	Street, Road, Subdivision	Owner or Applicant Name
AUGUSTA	CHURCH HILL ROAD	ROSANNE FLORES

SITE PLAN — Scale 1" = 100 Ft.

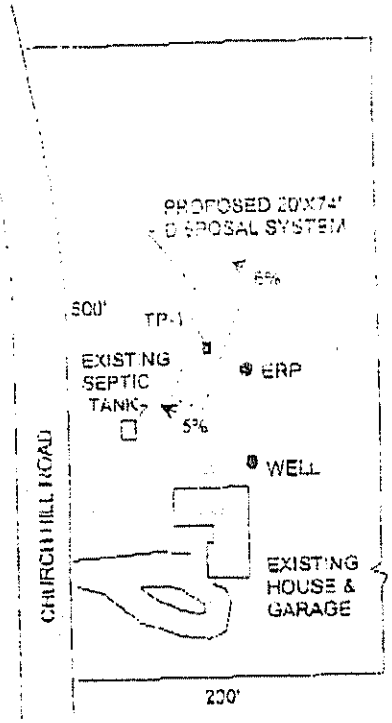

SITE LOCATION PLAN
(Attach map from Maine Atlas for First Time System Variance)

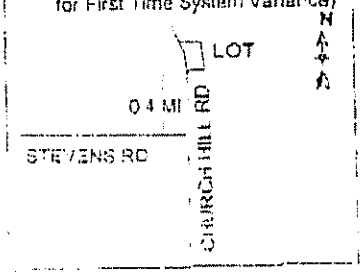

ERP TO TP-1 = 22'

PROPOSED SEPTIC SYSTEM TO BE 72 FEET FROM WELL

EXISTING SEPTIC TANK TO CHECKED FOR STRUCTURAL INTEGRITY
REPLACE EFFLUENT BAFFLE IF NECESSARY

INSTALL 3 FOOT DIAMETER PUMP STATION

AN ALTERNATE METHOD IS TO REPLACE THE EXISTING TANK WITH A NEW 1000 GALLON ONE-PIECE SEPTIC TANK NEAR THE HOUSE AT LEAST 25 FEET FROM THE WELL. THIS WOULD ACCOMMODATE ALL FLOWS FROM FIRST FLOOR OF STRUCTURE BY GRAVITY TO THE DISPOSAL SYSTEM.
ANY PLUMBING IN THE BASEMENT WOULD NEED AN EJECTOR STATION LOCATED IN THE BASEMENT

SOIL PROFILE DESCRIPTION AND CLASSIFICATION — Location of Observation Holes Shown Above

Observation Hole # TP-1 ■ Test Pit ☐ Boring

0 " Depth of organic horizon above mineral soil

Depth below mineral soil surface (inches)	Texture	Consistency	Color	Mottling
0	LOAM	FRIABLE	MEDIUM BROWN	NONE
10	SILT LOAM	FIRM	OLIVE BRN	COMMON
20				
30				
40				
50				

Soil Classification		Slope	Limiting Factor	
8	D	5-6 %	9 "	■ Groundwater
Profile	Condition	Percent	Depth	☐ Restrictive Layer ☐ Bedrock

Observation Hole # _____ ☐ Test Pit ☐ Boring

_____ " Depth of organic horizon above mineral soil

Depth below mineral soil surface (inches)	Texture	Consistency	Color	Mottling
0				
10				
20				
30				
40				
50				

Soil Classification		Slope	Limiting Factor	
		%	"	☐ Groundwater
Profile	Condition	Percent	Depth	☐ Restrictive Layer ☐ Bedrock

WILLIAM P BROWN — Site Evaluator Signature

188 — SE #

5/1/2003 — Date

SUBSURFACE WASTEWATER DISPOSAL SYSTEM APPLICATION

Maine Department of Human Services
Division of Health Engineering, Station 10

Town, City, Plantation	Street, Road, Subdivision	Owner or Applicant Name
AUGUSTA	CHURCH HILL ROAD	ROSANNE FLORES

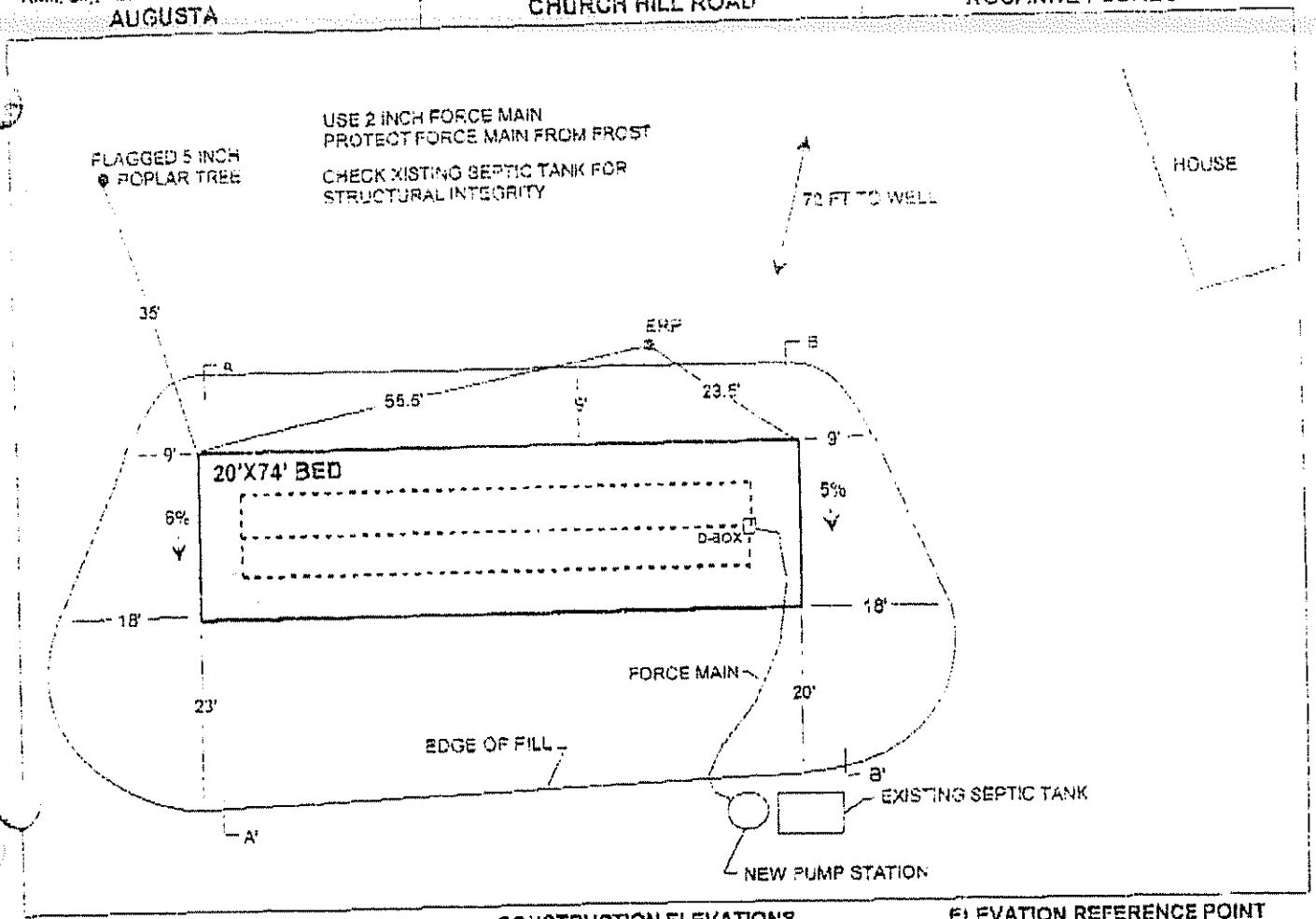

BACKFILL REQUIREMENTS

Depth of Fill (Upslope)	33 "
Depth of Fill (Downslope)	45-47 "

DEPTHS AT CROSS-SECTION (shown below)

CONSTRUCTION ELEVATIONS

Finished Grade Elevation	VARIES
Top of Distribution Pipe or Proprietary device	-31"
Bottom of Disposal Area	-42"

ELEVATION REFERENCE POINT

Location and Description
FLAGGED NAIL IN 5 INCH BLACK CHERRY, 3 FT ABOVE GROUND
Reference Elevation is: 00.0"

DISPOSAL AREA CROSS SECTION

Scale:
Vertical: 1 inch = 8 Ft.
Horizontal: 1 inch = 10 Ft.

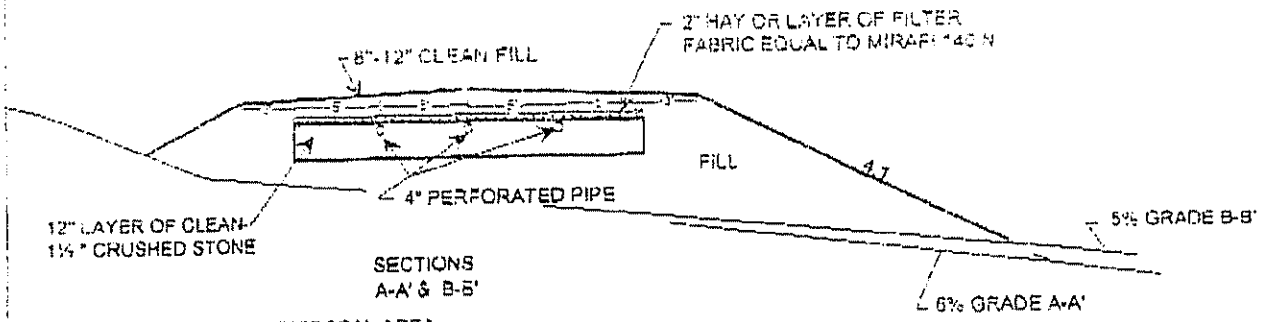

REMOVE VEGETATION IN DISPOSAL AREA
SCARIFY ENTIRE FILL AREA
MIX 4 INCHES OF FILL MATERIAL THOROUGHLY WITH EXISTING SOIL TO FORM
A TRANSITION ZONE (ACCORDING TO CHAPTER 8, PLUMBING CODE)
ALL FILL SHALL BE GRAVELLY COARSE SAND
CROWN FINISH GRADE FROM CENTER AT 3%
OR SLOPE ALL ONE WAY
LOAM, SEED, MULCH DISTURBED AREAS

WILLIAM P BROWN *William P Brown*	188	5/1/2003
Site Evaluator Signature	SE #	Date