SUBSURFACE WASTEWATER DISPOSAL SYSTEM APPLICATION

Division of Health Engineering
(207) 289-3826

PROPERTY ADDRESS

Town Or Plantation	AUGUSTA
Street Subdivision Lot #	CATHY STREET B+L SUB. LOT 7

PROPERTY OWNERS NAME

Last: DUTIL First: STEVEN

Applicant Name	313 NORTHERN AVENUE
Mailing Address of Owner/Applicant (If Different)	AUGUSTA, ME. 04330

2-116

AUGUSTA PERMIT # 851 TOWN COPY

Date Permit Issued: 9/6/86 $ 50.00 FEE ☐ If Double Fee Charged

[signature] L.P.I. # 808

Local Plumbing Inspector Signature

See back set to revisions.

Owner/Applicant Statement

I certify that the information submitted is correct to the best of my knowledge and understand that any falsification is reason for the Local Plumbing Inspector to deny a Permit

[signature] 9/3/86

Signature of Owner/Applicant Date

Caution: Inspection Required

I have inspected the installation authorized above and found it to be in compliance with the Subsurface Wastewater Disposal Rules

Local Plumbing Inspector Signature Date Approved

PERMIT INFORMATION

THIS APPLICATION IS FOR:

1 ☒ NEW SYSTEM
2 ☐ REPLACEMENT SYSTEM
3 ☐ EXPANDED SYSTEM
4 ☐ SEASONAL CONVERSION
5 ☐ EXPERIMENTAL SYSTEM

THIS APPLICATION REQUIRES:

1 ☒ NO RULE VARIANCE REQUIRED
2 ☐ NEW SYSTEM VARIANCE Attach New System Variance Form
☐ REPLACEMENT SYSTEM VARIANCE Attach Replacement System Variance Form
3 ☐ Requires only Local Plumbing Inspector Approval
4 ☐ Requires both State and Local Plumbing Inspector Approval

INSTALLATION IS

COMPLETE SYSTEM
1. ☒ NON-ENGINEERED SYSTEM
2 ☐ PRIMITIVE SYSTEM (Includes Alternative Toilet)
3 ☐ ENGINEERED (+ 2000 gpd)

INDIVIDUALLY INSTALLED COMPONENTS:
4 ☐ TREATMENT TANK (ONLY)
5 ☐ HOLDING TANK
6 ☐ ALTERNATIVE TOILET (ONLY)
7 ☐ NON-ENGINEERED DISPOSAL AREA (ONLY)
8 ☐ ENGINEERED DISPOSAL AREA (ONLY)
9 ☐ SEPARATED LAUNDRY SYSTEM

IF REPLACEMENT SYSTEM:

YEAR FAILING SYSTEM INSTALLED _____

THE FAILING SYSTEM IS:
1 ☐ BED 3 ☐ TRENCH
2 ☐ CHAMBER 4 ☐ OTHER _____

DISPOSAL SYSTEM TO SERVE:

1 ☒ SINGLE FAMILY DWELLING
2 ☐ MODULAR OR MOBILE HOME
3. ☐ MULTIPLE FAMILY DWELLING
4. ☐ OTHER _____ SPECIFY

SIZE OF PROPERTY	ZONING
1 AC±	

TYPE OF WATER SUPPLY

DRILLED WELL

DESIGN DETAILS (SYSTEM LAYOUT SHOWN ON PAGE 3)

TREATMENT TANK
1 ☒ SEPTIC ☐ Regular ☐ Low Profile
2 ☐ AEROBIC
SIZE 1000 GALS.

WATER CONSERVATION
1. ☐ NONE
2. ☒ LOW VOLUME TOILET
3 ☐ SEPARATED LAUNDRY SYSTEM
4 ☐ ALTERNATIVE TOILET
SPECIFY _____

PUMPING
1. ☐ NOT REQUIRED
2 ☒ MAY BE REQUIRED (DEPENDING ON TREATMENT TANK LOCATION AND ELEVATION)
3 ☐ REQUIRED
DOSE 40 GALS.

CRITERIA USED FOR DESIGN FLOW (BEDROOMS, SEATING EMPLOYEES, WATER RECORDS, ETC.)

2 BEDROOM

SOIL CONDITIONS USED FOR DESIGN PURPOSES

PROFILE	CONDITION
4	C

DEPTH TO LIMITING FACTOR 20

SIZE RATINGS USED FOR DESIGN PURPOSES
1 ☐ SMALL
2 ☒ MEDIUM
3 ☐ MEDIUM-LARGE
4 ☐ LARGE
5 ☐ EXTRA LARGE

DISPOSAL AREA TYPE/SIZE
1 ☒ BED 800 Sq. Ft.
2 ☐ CHAMBER _____ Sq. Ft.
☐ REGULAR ☐ H-20
3 ☐ TRENCH _____ Linear Ft.
4 ☐ OTHER _____

DESIGN FLOW 360 (GALLONS DAY)

SEP 3 1986 RECEIVED

SITE EVALUATOR STATEMENT

☐ SITE EVALUATION WAIVED BY LOCAL OPTION

On 6/21/85 (date) I conducted a site evaluation for this project and certify that the data reported is accurate. The system I propose is in accordance with the Subsurface Wastewater Disposal Rules.

[signature] #51 6/21/85

Site Evaluator or Professional Engineer's Signature SE# - PE# Date

* Local Plumbing Inspectors Signature if a Local Site Evaluation Waiver under a Local Option

HHE - 200 Rev. 4/83

Town, City, Plantation | Street, Road, Subdivision | Owners Name

SITE PLAN Scale 1" = 50' Pl.

SITE LOCATION PLAN (Attach Map from Maine Atlas for New System Variance)

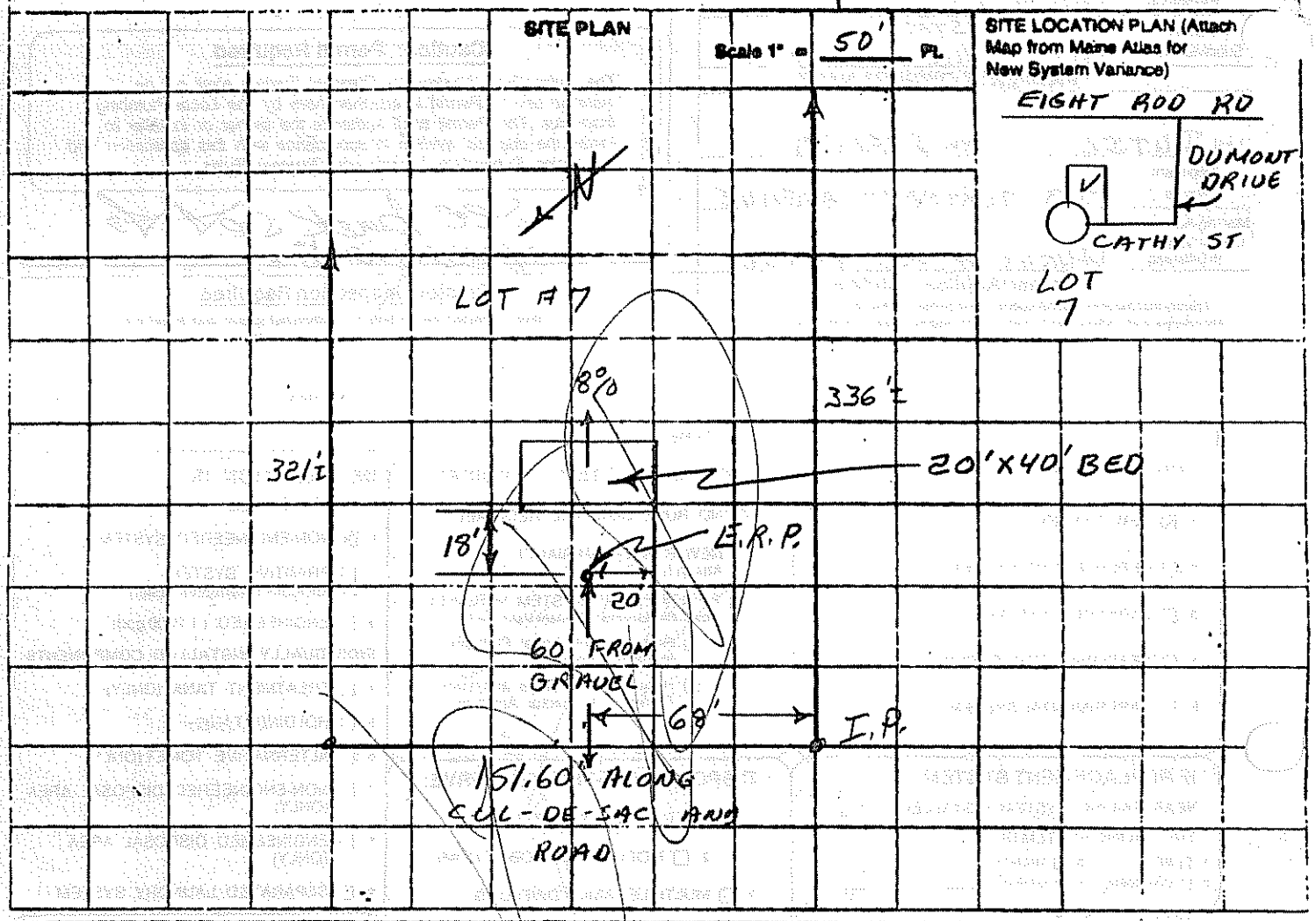

SOIL DESCRIPTION AND CLASSIFICATION (Location of Observation Holes Shown Above)

Observation Hole 1 ☐ Test Pit ☒ Boring

+2 " Depth of Organic Horizon Above Mineral Soil

DEPTH BELOW MINERAL SOIL SURFACE (inches)

Texture	Consistency	Color	Mottling
L.S.	FRIABLE	B.	
			20"
	FIRM	G.B.	

Soil	Classification	Slope	Limiting Factor
4	C	5 %	20 ☒ Ground Water ☐ Restrictive Layer ☐ Bedrock

Observation Hole _____ ☐ Test Pit ☐ Boring

_____ " Depth of Organic Horizon Above Mineral Soil

DEPTH BELOW MINERAL SOIL SURFACE (inches)

Texture	Consistency	Color	Mottling

Soil	Classification	Slope	Limiting Factor
		%	☐ Ground Water ☐ Restrictive Layer ☐ Bedrock

Site Evaluator or Professional Engineer's Signature | #51 SEe / PEe | 6/21/85 Date

SUBSURFACE WASTEWATER DISPOSAL SYSTEM LOCATION

Town, City, Plantation: AUGUSTA

Street, Road, Subdivision: B+L SUB. L-2

Division of Health Engineering

Owners Name: DUTIL

SUBSURFACE WASTEWATER DISPOSAL PLAN

Scale 1" = 20 FL OR AS SHOWN

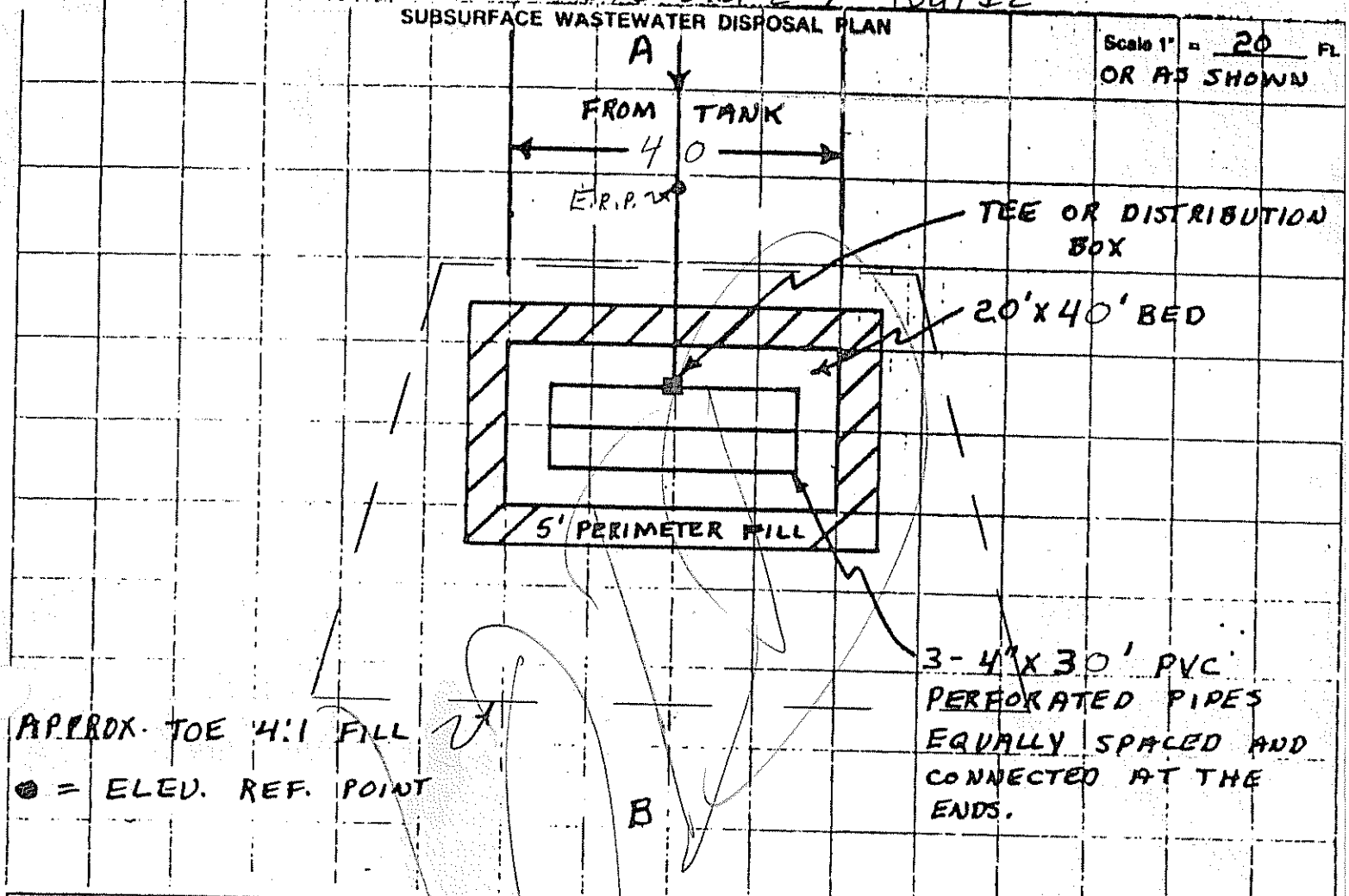

FILL REQUIREMENTS		CONSTRUCTION ELEVATIONS		ELEVATION REFERENCE POINT LOCATION & DESCRIPTION
Depth of Fill (Upslope)	16	Natural Elevation is	0	NAIL IN 8" BEECH TREE
Depth of Fill (Downslope)	32±	Bottom of Disposal Area	-68"	
		Top of Distribution Lines or Chambers	-57"	

DISPOSAL AREA CROSS SECTION

Scale:
Vertical: 1 inch = 5 Ft.
Horizontal: 1 inch = 10 Ft.

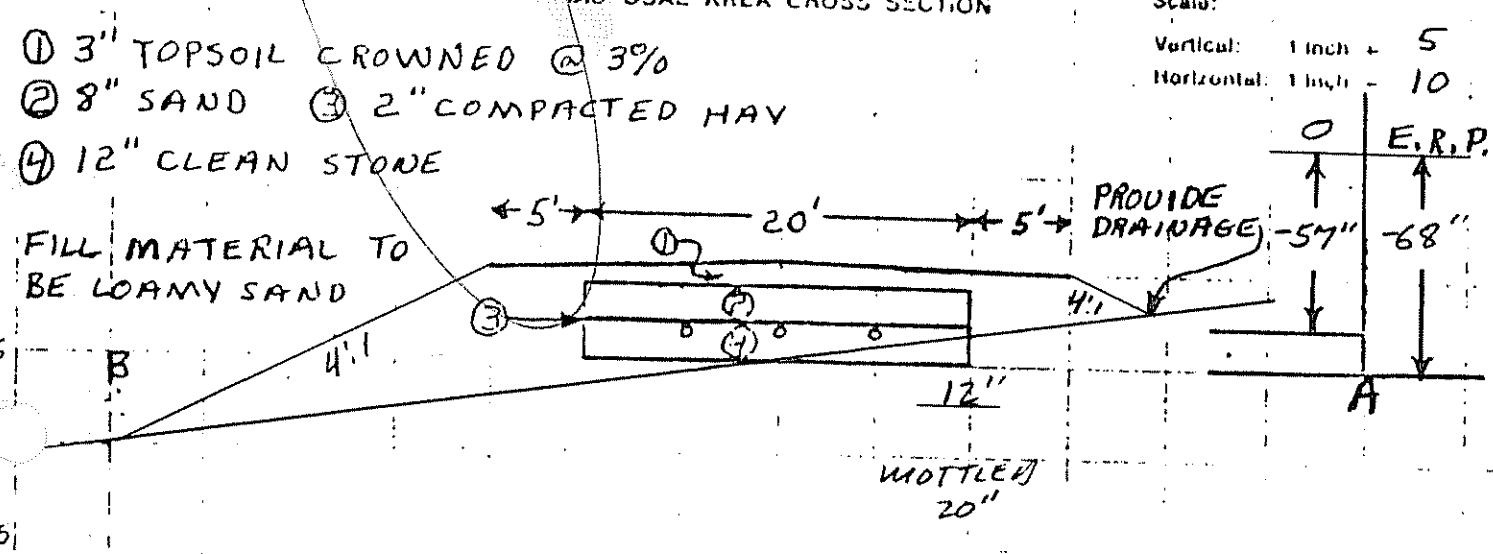

Miss Dunn. Tel. 622-9617

SUBSURFACE WASTEWATER DISPOSAL SYSTEM APPLICATION

09308819

PROPERTY ADDRESS

Town Or Plantation	Augusta
Street Division Lot #	B&L Sub. Lot 7 Cathy Street

PROPERTY OWNER'S NAME

Last: Dutil First: Steven

Applicant Name:	Steven Dutil
Mailing Address of Owner/Applicant (If Different)	313 Northern Avenue Augusta Me 04330

This permit to amend or replace permit #857 issued 9-16-85

CAUTION: PERMIT REQUIRED

The Subsurface Wasterwater Disposal System shall not be installed until a Permit is attached here by the Local Plumbing Inspector. The Permit shall authorize the owner or installer to install the disposal system in accordance with this application and the Maine Subsurface Wastewater Disposal Rules.

to Stephen Steven Dutil, 313 Northern Avenue.

OWNER/APPLICANT STATEMENT

I certify that the information submitted is correct to the best of my knowledge and understand that any falsification is reason for the Local Plumbing Inspector to deny a Permit.

Signature of Owner/Applicant — Date

CAUTION: INSPECTION REQUIRED

I have inspected the installation authorized above and found it to be in compliance with the Subsurface Wastewater Disposal Rules.

Local Plumbing Inspector Signature — Date Approved 10-17-85

PERMIT INFORMATION

THIS APPLICATION IS FOR:

1. ■ NEW SYSTEM
2. ☐ REPLACEMENT SYSTEM
3. ☐ EXPANDED SYSTEM
4. ☐ EXPERIMENTAL SYSTEM

SEASONAL CONVERSION

to be completed by the LPI

5. ☐ SYSTEM COMPLIES WITH RULES
6. ☐ CONNECTED TO SANITARY SEWER
7. ☐ SYSTEM INSTALLED - P# _____
8. ☐ SYSTEM DESIGN RECORDED AND ATTACHED

IF REPLACEMENT SYSTEM:

YEAR FAILING SYSTEM INSTALLED _____

THE FAILING SYSTEM IS

1. ☐ BED 3. ☐ TRENCH
2. ☐ CHAMBER 4. ☐ OTHER _____

SIZE OF PROPERTY	ZONING
1 ac+	

THIS APPLICATION REQUIRES:

1. ■ NO RULE VARIANCE
2. ☐ NEW SYSTEM VARIANCE
   Attach New System Variance Form
3. ☐ REPLACEMENT SYSTEM VARIANCE
   Attach Replacement System Variance Form
   a. ☐ Requires Local Plumbing Inspector Approval
   b. ☐ Requires State and Local Plumbing Inspector Approval
4. ☐ MINIMUM LOT SIZE VARIANCE

DISPOSAL SYSTEM TO SERVE:

1. ■ SINGLE FAMILY DWELLING
2. ☐ MODULAR OR MOBILE HOME
3. ☐ MULTIPLE FAMILY DWELLING
4. ☐ OTHER _____ SPECIFY

INSTALLATION IS:

COMPLETE SYSTEM

1. ■ NON-ENGINEERED SYSTEM
2. ☐ PRIMITIVE SYSTEM (Includes Alternative Toilet)
3. ☐ ENGINEERED (+ 2000 gpd)

INDIVIDUALLY INSTALLED COMPONENTS

4. ☐ TREATMENT TANK (ONLY)
5. ☐ HOLDING TANK _____ GAL.
6. ☐ ALTERNATIVE TOILET (ONLY)
7. ☐ NON-ENGINEERED DISPOSAL AREA (ONLY)
8. ☐ ENGINEERED DISPOSAL AREA (ONLY)
9. ☐ SEPARATED LAUNDRY SYSTEM

TYPE OF WATER SUPPLY

Drilled well propose

DESIGN DETAILS (SYSTEM LAYOUT SHOWN ON PAGE 3)

TREATMENT TANK

1. ■ SEPTIC: ☐ Regular ☐ Low Profile
2. ☐ AEROBIC

SIZE 1000 GALS.

WATER CONSERVATION

1. ■ NONE
2. ☐ LOW VOLUME TOILET
3. ☐ SEPARATED LAUNDRY SYSTEM
4. ☐ ALTERNATIVE TOILET
   SPECIFY _____

PUMPING

1. ☐ NOT REQUIRED
2. ■ MAY BE REQUIRED (DEPENDING ON TREATMENT TANK LOCATION & ELEVATION)
3. ☐ REQUIRED

DOSE: 54 GALS.

CRITERIA USED FOR DESIGN FLOW (BEDROOMS, SEATING) EMPLOYEES, WATER RECORDS, ETC.)

2 bedrooms

SOIL CONDITIONS USED FOR DESIGN PURPOSES

PROFILE	CONDITION
4	C

DEPTH TO LIMITING FACTOR: 18 "

SIZE RATINGS USED FOR DESIGN PURPOSES

1. ☐ SMALL
2. ■ MEDIUM
3. ☐ MEDIUM-LARGE
4. ☐ LARGE
5. ☐ EXTRA-LARGE

DISPOSAL AREA TYPE/SIZE

1. ☐ BED _____ Sq. Ft.
2. ■ CHAMBER 400 Sq. Ft.
   ■ REGULAR ☐ H-20
3. ☐ TRENCH _____ Linear Ft.
4. ☐ OTHER: _____

DESIGN FLOW: 300 (GALLONS/DAY)

SITE EVALUATOR STATEMENT

On 6/21/85 (date) I conducted a site evaluation for this project and certify that the data reported is accurate. The system I propose is in accordance with the Subsurface Wastewater Disposal Rules.

Site Evaluator Signature — SE# 51 — Date Rev 9/30/88

Approved for use as HHE 200 by Division of Health Engineering 9/87

SUBSURFACE WASTEWATER DISPOSAL SYSTEM APPLICATION

09308819

Town, City, Plantation	Street, Road, Subdivision	Owner's Name
Augusta	B&L Sub. Lot 7	Dutil , Steven

SITE PLAN

Scale: 1" = 50' Ft. or as shown

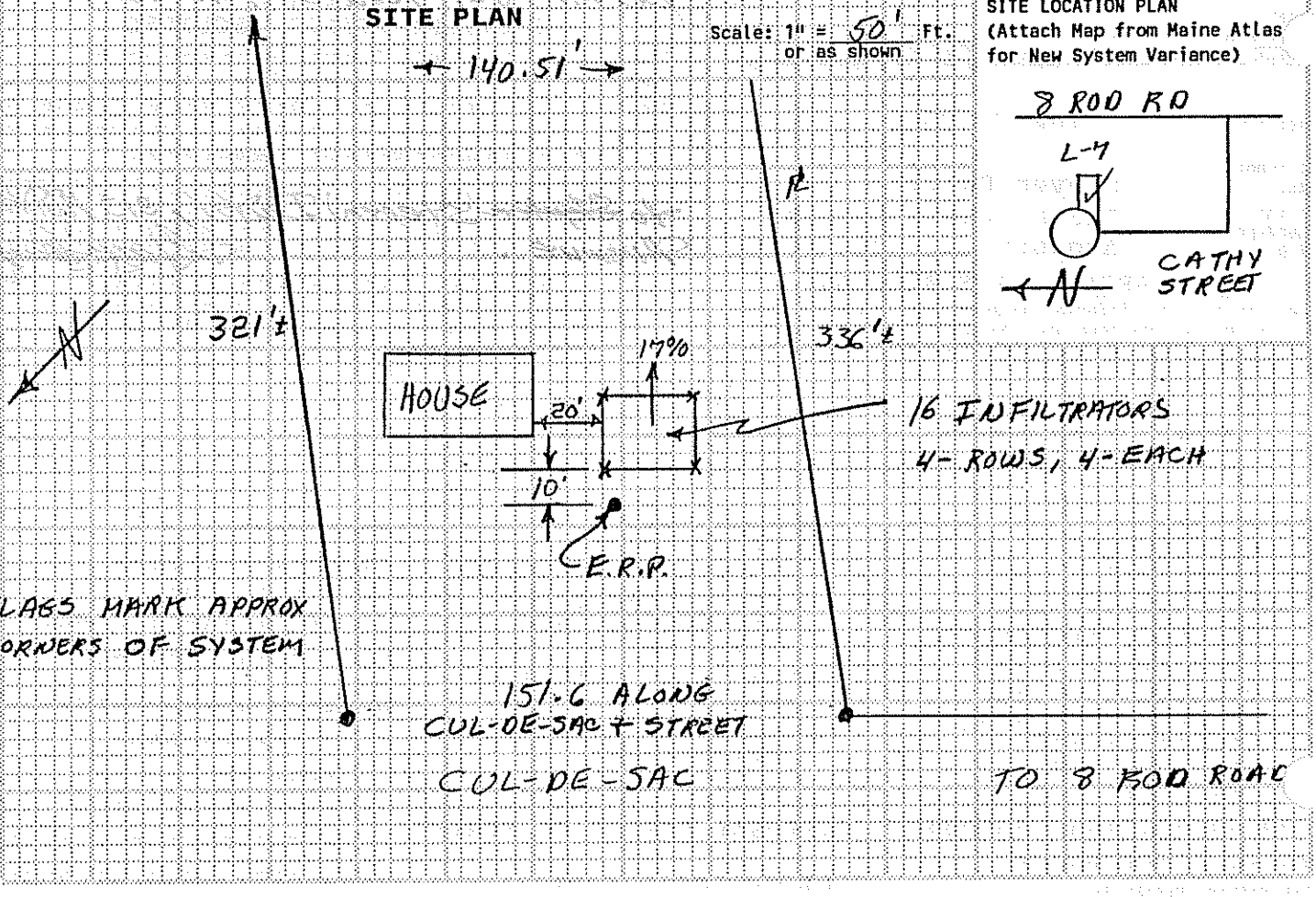

SITE LOCATION PLAN
(Attach Map from Maine Atlas for New System Variance)

SOIL DESCRIPTION AND CLASSIFICATION

(Location of Observation Holes Shown Above)

Observation Hole 1 ☐Test Pit ☒Boring

+2 " Depth of Organic Horizon Above Mineral Soil

Inches	Texture	Consistency	Color	Mottling
0–6	L.S.	FRIABLE	B	
6–15				
15–20		FIRM	G.B.	18"
20–50				

Soil Profile	Classification Condition	Slope	Limiting Factor	
4	C	17 %	18	☒Ground Water ☐Restr. Layer ☐Bedrock

Observation Hole _____ ☐Test Pit ☐Boring

_____ " Depth of Organic Horizon Above Mineral Soil

Inches	Texture	Consistency	Color	Mottling
0–50				

Soil Profile	Classification Condition	Slope	Limiting Factor	
		%		☐Ground Water ☐Restr. Layer ☐Bedrock

Alan W. Richard
Site Evaluator Signature

51
SE#

Rev 9/30/88
Date

Approved for use as HHE 200 by Division of Health Engineering 9/87

SUBSURFACE WASTEWATER DISPOSAL SYSTEM APPLICATION

09308819

Town, City, Plantation	Street, Road, Subdivision	Owner's Name
Augusta	B&L Sub. Lot 7	Dutil , Steven

SUBSURFACE WASTEWATER DISPOSAL PLAN

Scale: 1" = 10 Ft. or as shown

A

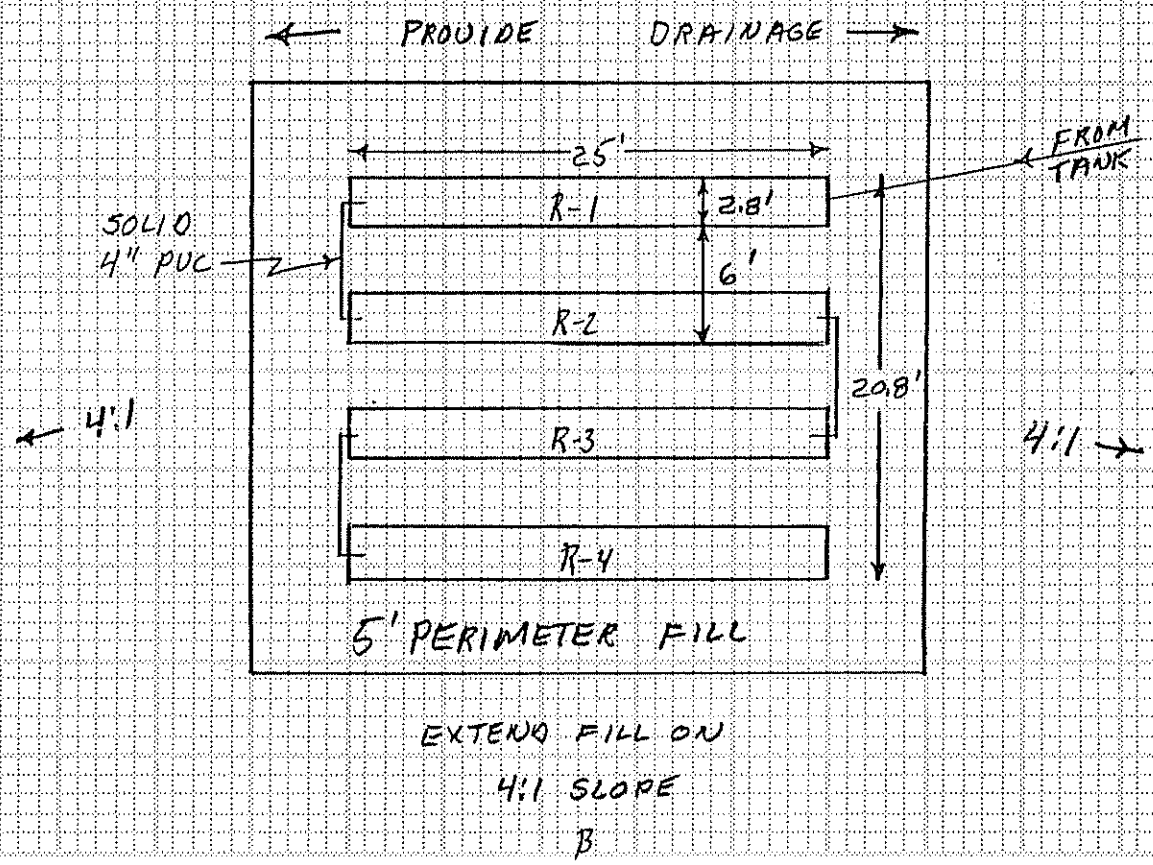

B

FILL REQUIREMENTS	CONSTRUCTION ELEVATION	ELEVATION REFERENCE POINT
Depth of Fill (Upslope) 20"	Reference Elevation is R-1 ONLY 0	NAIL IN 8" BEECH TREE
Depth of Fill (Downslope) 10	Bottom of Disposal Area -53"	
	Top of Distribution Lines or Chambers -38"	

DISPOSAL AREA CROSS SECTION

Scale:
Vertical: 1 inch = 5 Ft.
Horizontal: 1 inch = 10 Ft.

① 8" COVER FILL
② SANDY GRAVEL FILL
③ LOAMY SAND FILL

R-1, R-2, R-3, R-4 – 4 INFILTRATORS EACH ROW

BOTTOM	ELEV.
R-1	-53"
R-2	-63"
R-3	-73"
R-4	-83"

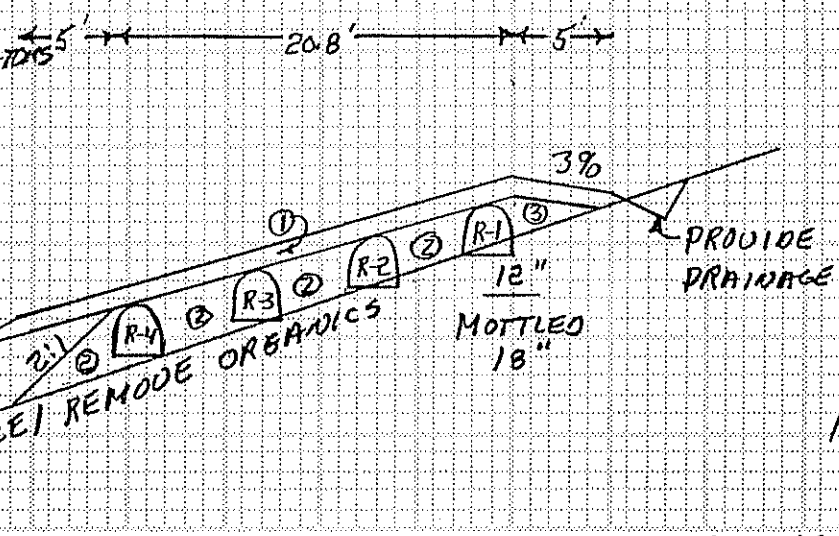

A

D

Allen W. Rich
Site Evaluator Signature

51
SE#

Rev 9/30/88
Date

Approved for use as HHE 200 by Division of Health Engineering 9/87